查询"268-5401-00-1102JH"供应商

175 076

OEM/Production Chip Carrier Sockets

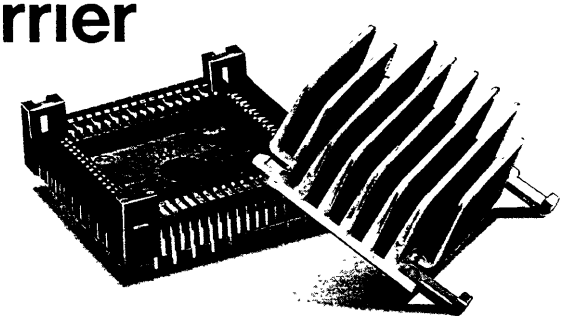

68 position

Durable, low cost production socket designed to accept JEDEC leadless 'Type A' chip carrier package.

It offers :

- 2.54mm×2.54mm PC board hole pattern.
- Device to socket and socket to PC board orientation polarized for a one-way fit.
- 8.7mm low profile.
- Sturdy 0.38mm×0.51mm rectangular leads that aren't easily bent or distorted.

268-5401 Series Specifications	
Body Material	Glass Fortified Polyphenylene Sulfide U.L.94 V-0 Color : Black
Lid Material	Aluminum
Contact Material	BeCu
Contact Plating	Gold over Nickel Undercoat
Temperature Rating	−55°C~125°C

The 268-5401 series was designed with heat dissipation as one of its prime objectives.

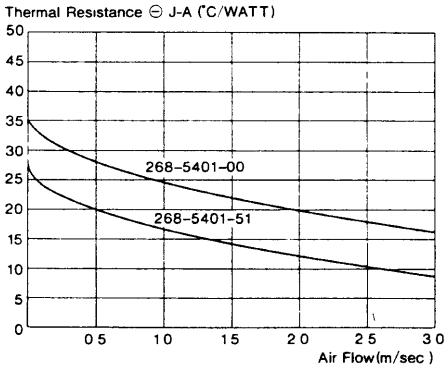

●Sockets Dimensions

268-5401-00-1102J

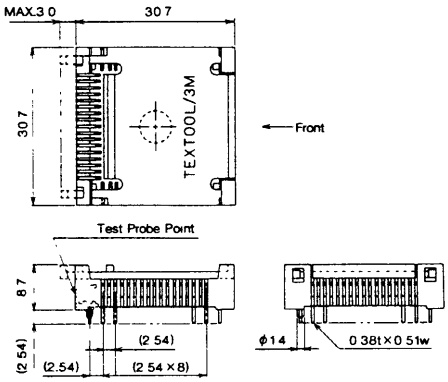

268-5401-50-1102J

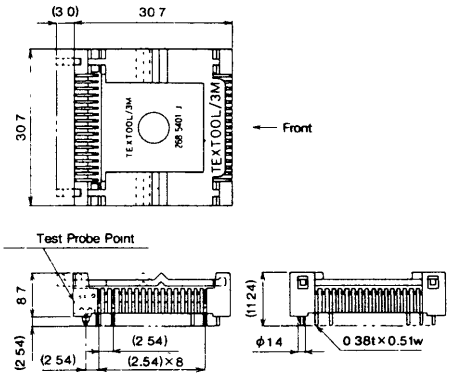

268-5401-51-1102J

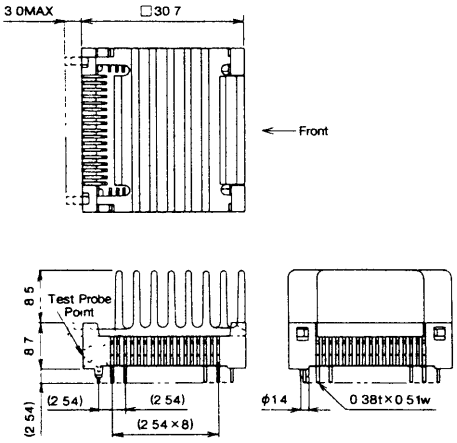

268-5401-52-1102J

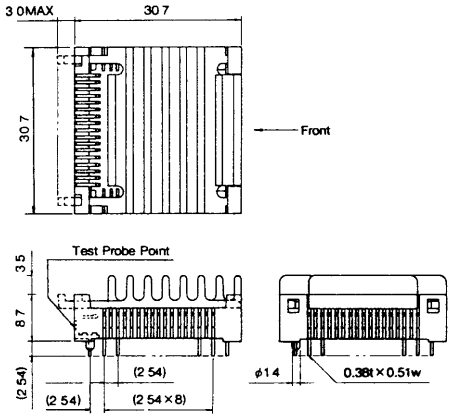

PC Board Hole Pattern

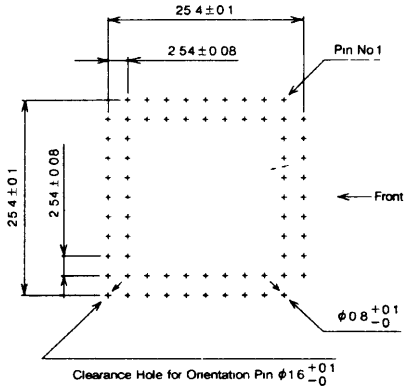

Part Number	Type
268-5401-00-1102J	Standard Aluminum Lid
268-5401-50-1102J	U-Shaped Aluminum Lid
268-5401-51-1102J	Height 11mm Integral Heat Sink Lid
268-5401-52-1102J	Height 6mm Integral Heat Sink Lid