查询"DAC-HF10BMM"供应商

# DAC-HF Series

## Ultra-Fast, 8/10/12-Bit Digital-to-Analog Converters

### FEATURES

- 8, 10 and 12-Bit resolutions
- Settling times to 25ns
- ±20ppm/°C max. gain tempco
- Unipolar or bipolar operation
- Current output
- Internal feedback resistors
- High-reliability MIL-STD-883 models

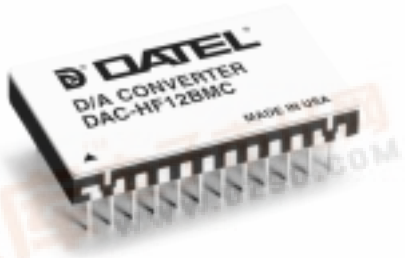


### GENERAL DESCRIPTION

The DAC-HF Series of hybrid DAC's are ultra high-speed, current output devices. They incorporate state-of-the-art performance in a miniature package, achieving maximum output settling times of 25ns for the 8 and 10-bit models and 50ns for the 12-bit model. They can be used to drive a resistor load directly for up to ±1V output or a fast operational ampifier (such as DATEL's AM-500) for higher voltage outputs with sub-microsecond settling times. A tapped feedback resistor and a bipolar offset resistor are included internally to give five programmable output voltage ranges with an external operational amplifier.

The DAC-HF design combines proven hybrid construction techniques with advanced circuit design to realize high-speed current switching. The design incorporates fast PNP current switches driving a low-impedance R-2R thin-film ladder network. The nichrome thin-film resistor network is deposited by electron beam evaporation on a low-capacitance substrate to assure high-speed performance. The resistors are then functionally trimmed by laser for optimum linearity.

### INPUT/OUTPUT CONNECTIONS, DAC-HF12B

| PIN | FUNCTION | PIN | FUNCTION |
|---|---|---|---|
| 1 | BIT 1 (MSB) | 24 | +15V SUPPLY |
| 2 | BIT 2 | 23 | GROUND |
| 3 | BIT 3 | 22 | –15V SUPPLY |
| 4 | BIT 4 | 21 | REFERENCE OUT |
| 5 | BIT 5 | 20 | BIPOLAR OFFSET |
| 6 | BIT 6 | 19 | 10V RANGE |
| 7 | BIT 7 | 18 | OUTPUT |
| 8 | BIT 8 | 17 | 20V RANGE |
| 9 | BIT 9 * | 16 | REFERENCE IN |
| 10 | BIT 10 * | 15 | GROUND |
| 11 | BIT 11 * | 14 | GROUND |
| 12 | BIT 12 (LSB) * | 13 | GROUND |

* See note in Figure 1

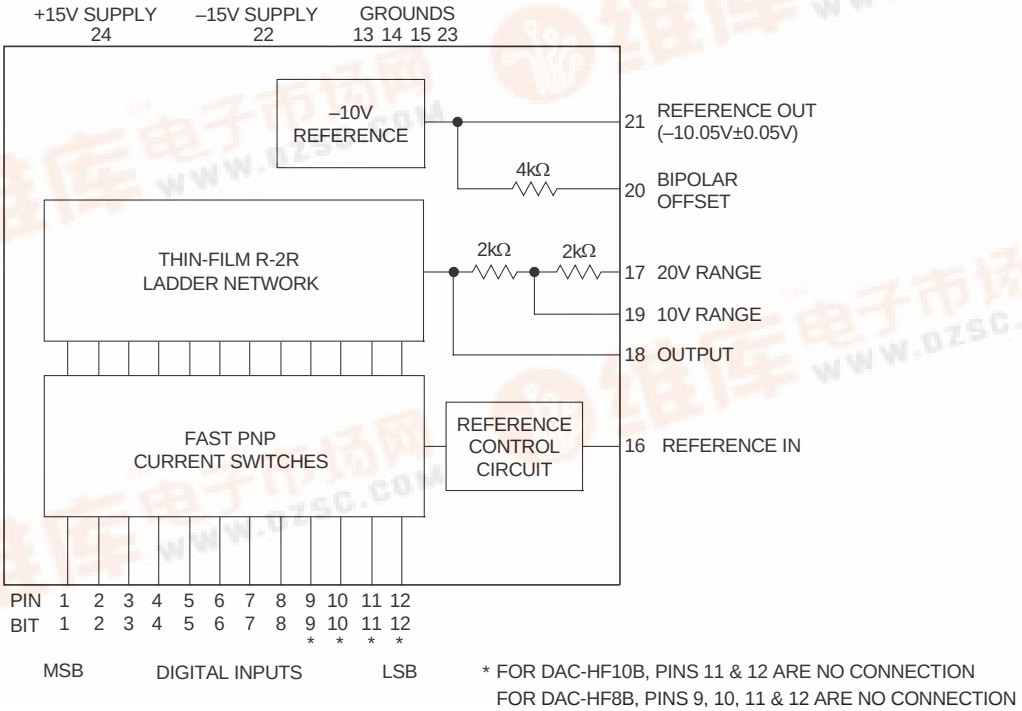


* FOR DAC-HF10B, PINS 11 & 12 ARE NO CONNECTION
FOR DAC-HF8B, PINS 9, 10, 11 & 12 ARE NO CONNECTION

**Figure 1. Functional Block Diagram**

找PDF 维库一下 pdf.dzsc.com

查询"DAC-HF10BMM"供应商

## ABSOLUTE MAXIMUM RATINGS, ALL MODELS

| | |
|---|---|
| **Positive Supply, Pin 24** | +18V |
| **Negative Supply, Pin 22** | –18V |
| **Digital Input Voltage, Pins 1–12** | +15V |
| **Lead Temperature (soldering, 10s)** | 300°C |

## FUNCTIONAL SPECIFICATIONS

(Typical at +25°C and ±15V supplies unless otherwise noted.)

| DESCRIPTION | 8B | 10B | 12B |
|---|---|---|---|
| **INPUTS** | | | |
| **Resolution,** Bits | 8 | 10 | 12 |
| **Coding,** Unipolar Output | Straight binary | | |
| **Coding,** Bipolar Output | Offset binary | | |
| **Input Logic Level,** Bit ON ("1") | +2.0V to +5.5V at +40µA | | |
| **Input Logic Level,** Bit OFF ("0") | 0V to +0.8V at –2.6mA | | |
| **PERFORMANCE** | | | |
| **Nonlinearity Error,** max. | ±0.012% | | |
| **$T_{MIN}$ to $T_{MAX}$** | ±0.024% | | |
| **Differential Nonlinearity Error,** max. | ±0.012% | | |
| **$T_{MIN}$ to $T_{MAX}$** | ±0.024% | | |
| **Monotonicity** | Guaranteed over oper. temp. range | | |
| **Gain Tempco,** max. | ±20ppm/°C | | |
| **Offset Tempco,** Bipolar, max. | ±10ppm/°C of FSR ② | | |
| **Zero Tempco,** max. | ±1.5ppm/°C of FSR ② | | |
| **Settling Time,** ns max. ③ | 25 | 25 | 50 |
| **Power Supply Sensitivity** | ±0.01%/% Supply | | |
| **OUTPUTS** | | | |
| **Output Current Range,** Unipolar | 0 to +5mA | | |
| **Output Current Range,** Bipolar | ±2.5mA | | |
| **Output Compliance Voltage** | ±1.2V | | |
| **Output Voltage Ranges** ① | 0 to –5V<br>0 to –10V<br>±2.5V<br>±5V<br>±10V | | |
| **Output Resistance** | 400 Ohms ±10% | | |
| **Output Capacitance** | 15pF | | |
| **Output Leakage Current,** All Bits OFF | 15nA | | |
| **POWER REQUIREMENTS** | | | |
| **Supply Voltages** | ±15V ±0.5V | | |
| **Positive Quiescent Current,** max. | 40mA | 45mA | 50mA |
| **Negative Quiescent Current,** max. | 17mA | 17mA | 17mA |
| **PHYSICAL ENVIRONMENTAL** | | | |
| **Operating Temperature Range,** Case | 0°C to +70°C (BMC)<br>–55°C to +125°C (BMM, 883) | | |
| **Storage Temperature Range** | –65°C to +150°C | | |
| **Package Type** | 24-pin ceramic DDIP | | |
| **Weight** | 0.22 ounces (6.3 grams) | | |

**Footnotes**

① With external operational amplifier.

② FSR is Full Scale Range, or the difference between minimum and maximum output values.

③ Full-scale current change to ±1LSB with 400Ω load.

## TECHNICAL NOTES

1. Proper operation of the DAC-HF Series converters is dependent on good board layout and connection practices. Bypass supplies as shown in the connection diagrams. Mount bypass capacitors close to the converter, directly to the supply pins where possible.

2. Use of a ground plane is particularly important in high-speed D/A converters as it reduces high-frequency noise and aids in decoupling the digital inputs from the analog output. Avoid ground loop problems by connecting all grounds on the board to the ground plane. The remainder of the ground plane should include as much of the circuit board as possible.

3. When the converter is configured for voltage output with an external operational amplifier, keep the leads from the converter to the output amplifier as short as possible.

4. The high-speed current switching technique used in the DAC-HF Series inherently reduces the amplitude and duration of large transient spikes at the output ("glitches"). The most severe glitches occur at half-scale, the major carry transition from 011 … 1 to 100 … 0 or vice versa. At this time, a skewing of the input codes can create a transition state code of 111 … 1. The duration of the "transition state code" is dependent on the degree of skewing, but its effect is dependent on the speed of the DAC (an ultra-fast DAC will respond to these brief spurious inputs to a greater degree than a slow DAC).

   Minimize the effects of input skewing by using a high-speed input register to match input switching times. The input register recommended for use with the DAC-HF is easily implemented with two Texas Instruments SN74S174 hex D-type flip-flops. This register will reduce glitches to a very low level and ensure fast output settling times.

5. Test the DAC-HF using a low-capacitance test probe (such as a 10X probe). Take care to assure the shortest possible connection between probe ground and circuit ground. Long probe ground leads may pick up environmental E.M.I. causing artifacts on the scope display, i.e., signals that do not originate at the unit under test.

6. Passive components used with the DAC-HF may be as indicated here: 0.1µF and 1µF bypass capacitors should be ceramic type and tantalum type respectively; the 400Ω output load is a ±0.1%, 10ppm/°C, metal-film type; adjustment potentiometers are ceremet types; other resistors may be ±10% carbon composition types.

7. Output voltage compliance is ±1.2V to preserve the linearity of the converter. In the bipolar mode, the DAC-HF can be operated with no load to give an output voltage of ±1.0V. In the unipolar mode, the load resistance must be less than 600Ω to give less than +1.2V output. The specified output currents of 0 to +5mA and ±2.5mA are measured into a short circuit or an operational amplifier summing junction.

查询"DAC-HF10BMM"供应商

## CALIBRATION PROCEDURE

### Unipolar Output Current

1. Connect the converter as shown in Figure 2.
2. Set all inputs low and adjust the ZERO ADJUST potentiometer for a reading of 0V at the output.
3. Set all inputs high and adjust the GAIN ADJUST potentiometer for a reading of –F.S. + 1LSB (See Table 1).

### Bipolar Output Current

1. Connect the converter as shown in Figure 3.
2. Set all inputs low and adjust the OFFSET ADJUST and LOAD potentiometer for an output reading of +F.S. (See Table 2).
3. Set all inputs high and adjust the GAIN ADJUST potentiometer for an output reading of –F.S. + 1LSB (See Table 2).

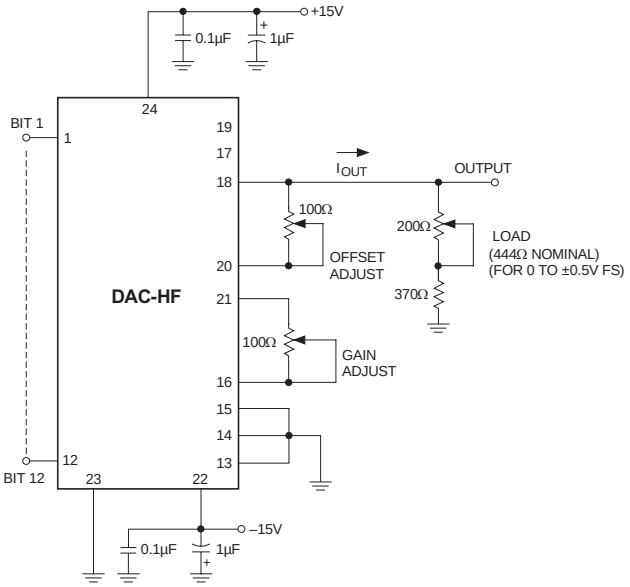


**Figure 3. Bipolar Current Output Connections**

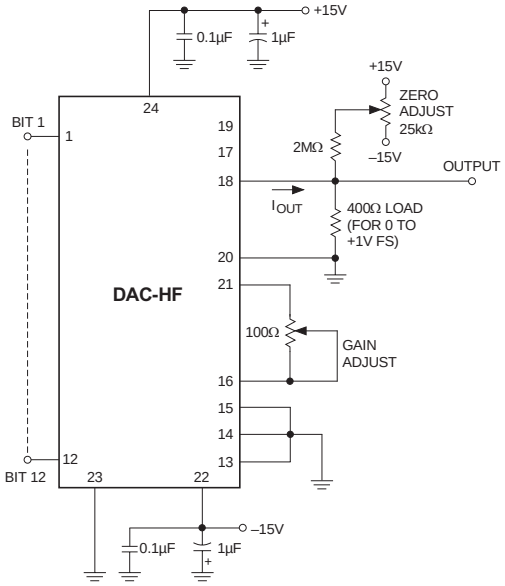


**Figure 2. Unipolar Current Output Connections**

**Table 1. 12-Bit Unipolar Output Coding**

| UNIPOLAR SCALE | INPUT CODING STRAIGHT BINARY | ANALOG OUTPUT | | |
|---|---|---|---|---|
| | | 0 to 1V F.S. | 0 to –5V F.S. | 0 to –10V F.S. |
| –F.S. + 1LSB | 1111 1111 1111 | +0.9998V | –4.9988V | –9.9976V |
| –3/4F.S. | 1100 0000 0000 | +0.7500V | –3.7500V | –7.5000V |
| –1/2F.S. | 1000 0000 0000 | +0.5000V | –2.5000V | –5.0000V |
| –1/4F.S. | 0100 0000 0000 | +2.5000V | –1.2500V | –2.5000V |
| –1LSB | 0000 0000 0001 | +0.0002V | –0.0012V | –0.0024V |
| 0 | 0000 0000 0000 | 0.0000V | 0.0000V | 0.0000V |

**Table 2. 12-Bit Bipolar Output Coding**

| BIPOLAR SCALE | INPUT CODING OFFSET BINARY | ANALOG OUTPUT | | | |
|---|---|---|---|---|---|
| | | ±0.5V F.S. | ±2.5V F.S. | ±5V F.S. | ±10V F.S. |
| –F.S. + 1LSB | 1111 1111 1111 | +0.4998V | –2.4988V | –4.9976V | –9.9951V |
| –1/2F.S. | 1100 0000 0000 | +0.1250V | –1.2500V | –2.5000V | –5.0000V |
| –1LSB | 1000 0000 0001 | +0.0002V | –0.0012V | –0.0024V | –0.0049V |
| 0 | 1000 0000 0000 | 0.0000V | 0.0000V | 0.0000V | 0.0000V |
| +1/2F.S. | 0100 0000 0000 | –0.1250V | +1.2500V | +2.5000V | +5.0000V |
| +F.S. – 1LSB | 0000 0000 0001 | –0.4998V | +2.4988V | +4.9976V | +9.9951V |
| +F.S. | 0000 0000 0000 | –0.5000V | +2.5000V | +5.0000V | +10.0000V |

**Table 3. Programmable Output Range Pin Connections**

| OUTPUT VOLTAGE RANGE | FEEDBACK CONNECTIONS | CONNECT THESE PINS TOGETHER |
|---|---|---|
| 0 to –5V | PIN 19 | PIN 17 to PIN 18 / PIN 20 to PIN 23 |
| 0 to –10V | PIN 19 | PIN 20 to PIN 23 |
| ±2.5V | PIN 19 | PIN 17 to PIN 18 / PIN 20 to PIN 18 |
| ±5V | PIN 19 | PIN 20 to PIN 18 |
| ±10V | PIN 17 | PIN 20 to PIN 18 |

In all programmable output ranges, pin 18 connects to external operational amplifier inverting input.

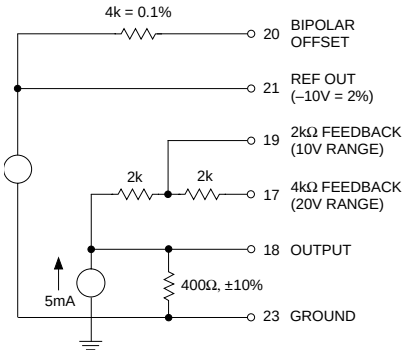


**Figure 4. Equivalent Output Circuit**

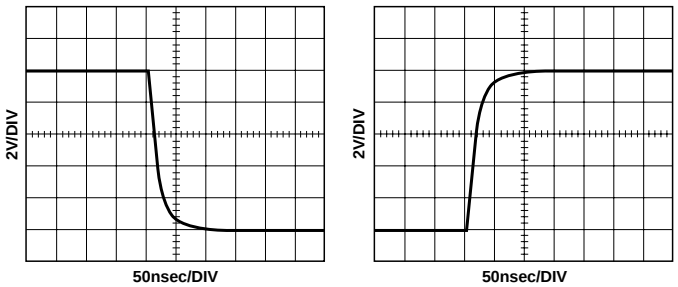


DAC-HF with AM-500, ±5V output full scale (10V) step

**Figure 5. Voltage Output Waveforms**

查询"DAC-HF10BMM"供应商

## APPLICATIONS

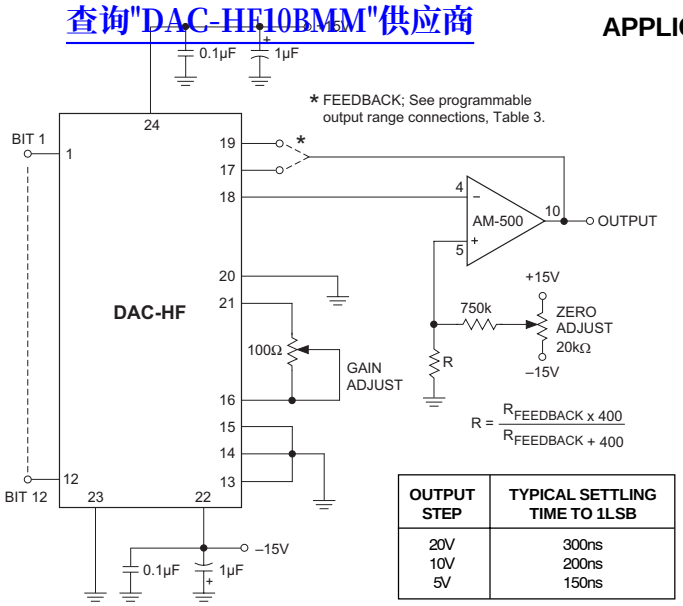


| OUTPUT STEP | TYPICAL SETTLING TIME TO 1LSB |
|---|---|
| 20V | 300ns |
| 10V | 200ns |
| 5V | 150ns |

**Figure 6. Unipolar Ultra-Fast Voltage Output Circuit**

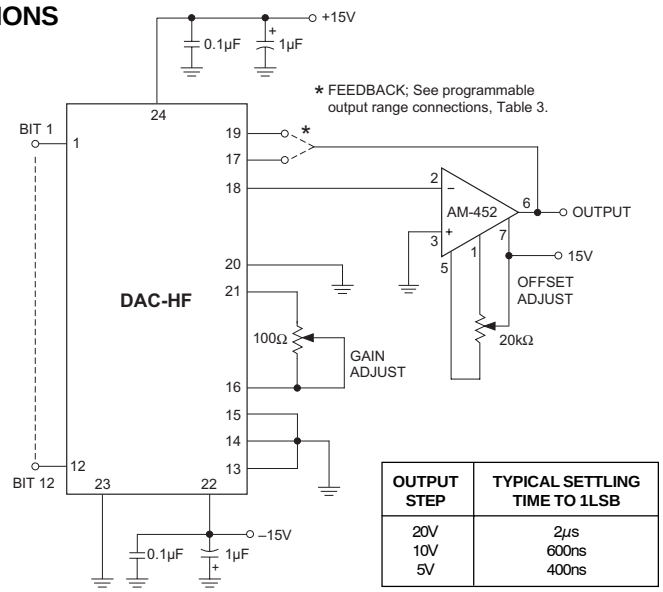


| OUTPUT STEP | TYPICAL SETTLING TIME TO 1LSB |
|---|---|
| 20V | 2µs |
| 10V | 600ns |
| 5V | 400ns |

**Figure 7. Unipolar Fast Voltage Output Circuit**

## MECHANICAL DIMENSIONS INCHES (mm)

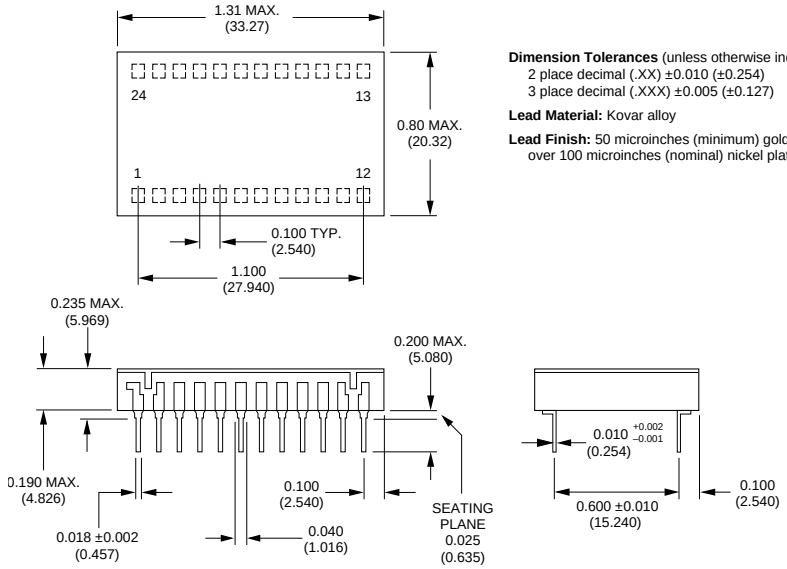


**Dimension Tolerances** (unless otherwise indicated):
2 place decimal (.XX) ±0.010 (±0.254)
3 place decimal (.XXX) ±0.005 (±0.127)

**Lead Material:** Kovar alloy

**Lead Finish:** 50 microinches (minimum) gold plating over 100 microinches (nominal) nickel plating

## ORDERING INFORMATION

| MODEL | OPERATING TEMP. RANGE | BITS |
|---|---|---|
| DAC-HF8BMC | 0 to +70°C | 8 |
| DAC-HF8BMM | –55 to +125°C | 8 |
| DAC-HF8/883 ① | –55 to +125°C | 8 |
| DAC-HF10BMC | 0 to +70°C | 10 |
| DAC-HF10BMM | –55 to +125°C | 10 |
| DAC-HF10/883 ① | –55 to +125°C | 10 |
| DAC-HF12BMC | 0 to +70°C | 12 |
| DAC-HF12BMM | –55 to +125°C | 12 |
| DAC-HF12/883 ① | –55 to +125°C | 12 |

INNOVATION and EXCELLENCE

C&D Technologies, Inc.
11 Cabot Boulevard, Mansfield, MA 02048-1151 U.S.A.
Tel: (508) 339-3000 (800) 233-2765 Fax: (508) 339-6356
**www.cd4power.com** **email: sales@cdtechno.com**

**USA:** Tucson (Az), Tel: (800) 547 2537, email: sales@cdtechno.com
Portland (OR), Tel: 971 206 2800, email: portland@cdtechno.com

**Canada:** Toronto, Tel: (905) 944 2850, email: toronto@cdtechno.com

**United Kingdom:** Milton Keynes, Tel: +44 (0)1908 615232, email: mk@cdtechno.com

**France:** Montigny Le Bretonneux, Tel: +33 (0)1 34 60 01 01, email: france@cdtechno.com

**Germany:** München, Tel: +49 (0)89-544334-0, email: ped.munich@cdtechno.com

**Japan:** Tokyo, Tel: 3-3779-1031, email: sales_tokyo@cdtechno.com
Osaka, Tel: 6-6354-2025, email: sales_osaka@cdtechno.com
**Website: www.cd4power.jp**

**China:** Shanghai, Tel: +86 215 027 3678, email: shanghai@cdtechno.com
Guangzhou, Tel: +86 208 221 8066, email: guangzhou@cdtechno.com

**ISO 9001 REGISTERED** DS-0132C 6/2007

C&D Technologies, Inc. makes no representation that the use of its products in the circuits described herein, or the use of other technical information contained herein, will not infringe upon existing or future patent rights. The descriptions contained herein do not imply the granting of licenses to make, use, or sell equipment constructed in accordance therewith. Specifications are subject to change without notice.