Freescale Semiconductor
Technical Data

Document Number: MHW9146N
Rev. 4, 5/2006

查询"MHW9146N"供应商

RoHS

Gallium Arsenide CATV Amplifier Module

MHW9146N

870 MHz
14.3 dB GAIN
132-CHANNEL
GaAs CATV AMPLIFIER MODULE

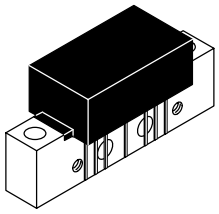

CASE 1302-01, STYLE 1

Features

- Specified for 79-, 112- and 132-Channel Loading
- Excellent Distortion Performance
- Built-in Input Diode Protection
- GaAs FET Transistor Technology
- Unconditionally Stable Under All Load Conditions

Applications

- CATV Systems Operating in the 40 to 870 MHz Frequency Range
- Input Stage Amplifier in Optical Nodes, Line Extenders and Trunk Distribution Amplifiers for CATV Systems
- Output Stage Amplifier on Applications Requiring Low Power Dissipation and High Output Performance
- Driver Amplifier in Linear General Purpose Applications

Description

- 24 Vdc Supply, 40 to 870 MHz, CATV GaAs Forward Amplifier Module
- Replaced MHW9146. There are no form, fit or function changes with this part replacement.
- RoHS Compliant

Table 1. Maximum Ratings

Rating	Symbol	Value	Unit
RF Voltage Input (Single Tone)	V_{in}	+65	dBmV
DC Supply Voltage	V_{CC}	+26	Vdc
Operating Case Temperature Range	T_C	-20 to +100	°C
Storage Temperature Range	T_{stg}	-40 to +100	°C

Table 2. ESD Maximum Ratings

Rating	Input Value	Output Value	Unit
Surge Voltage per IEC 1000-4-5	200	200	V
Human Body Model per Mil. Std. 1686	2	2	kV

Table 3. Electrical Characteristics (V_{CC} = 24 Vdc, T_C = +45°C, 75 Ω system unless otherwise noted)

Characteristic		Symbol	Min	Typ	Max	Unit
Frequency Range		BW	40	—	870	MHz
Power Gain	870 MHz	G_p	13.8	14.3	14.8	dB
Slope	40-870 MHz	S	0	0.4	1.0	dB
Gain Flatness (40-870 MHz, Peak-to-Valley)		G_F	—	—	0.5	dB
Return Loss — Input (Z_o = 75 Ohms)	40-500 MHz f > 501 MHz	IRL	20 18	— —	— —	dB
Return Loss — Output (Z_o = 75 Ohms)	40-160 MHz f > 160 MHz	ORL	20 18	— —	— —	dB

ARCHIVE INFORMATION

© Freescale Semiconductor, Inc., 2006, 2008. All rights reserved.

freescale semiconductor

Table 3. Electrical Characteristics (V_{CC} = 24 Vdc, T_C = +45°C, 75 Ω system unless otherwise noted) **(continued)**

查询"MHW9146N"供应商

Characteristic		Symbol	Min	Typ	Max	Unit
Composite Second Order						dBc
(V_{out} = +48 dBmV/ch., Worst Case)	79-Channel FLAT	CSO_{79}	—	-68	-64	
(V_{out} = +46 dBmV/ch., Worst Case)	112-Channel FLAT	CSO_{112}	—	-63	-60	
(V_{out} = +44 dBmV/ch., Worst Case)	132-Channel FLAT	CSO_{132}	—	-63	-60	
Cross Modulation Distortion @ Ch 2						dBc
(V_{out} = +48 dBmV/ch., FM = 55.25 MHz)	79-Channel FLAT	XMD_{79}	—	-60	-55	
(V_{out} = +46 dBmV/ch., FM = 55.25 MHz)	112-Channel FLAT	XMD_{112}	—	-60	-55	
(V_{out} = +44 dBmV/ch., FM = 55.25 MHz)	132-Channel FLAT	XMD_{132}	—	-60	-55	
Composite Triple Beat						dBc
(V_{out} = +48 dBmV/ch., Worst Case)	79-Channel FLAT	CTB_{79}	—	-64	-60	
(V_{out} = +46 dBmV/ch., Worst Case)	112-Channel FLAT	CTB_{112}	—	-64	-60	
(V_{out} = +44 dBmV/ch., Worst Case)	132-Channel FLAT	CTB_{132}	—	-64	-60	
Noise Figure	50 MHz	NF	—	4.4	5.5	dB
	550 MHz		—	3.8	—	
	750 MHz		—	4.0	—	
	870 MHz		—	4.3	5.5	
DC Current (V_{DC} = 24 V, T_C = 45°C)		I_{DC}	230	245	260	mA

Note: This device requires an external 0.01 μF DC blocking capacitor connected to the output pin (Pin 9) as indicated in Figure 1.

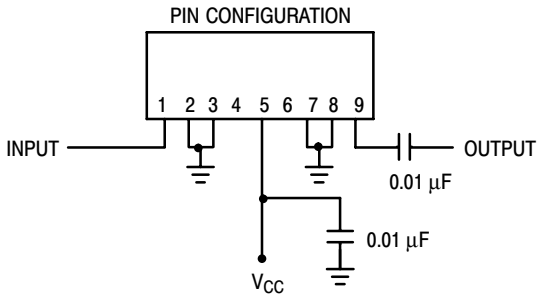

Figure 1. External Connections

ARCHIVE INFORMATION
ARCHIVE INFORMATION

查询"MHW9146N"供应商

PACKAGE DIMENSIONS

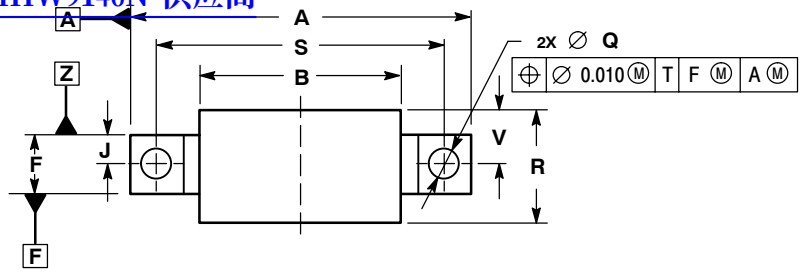

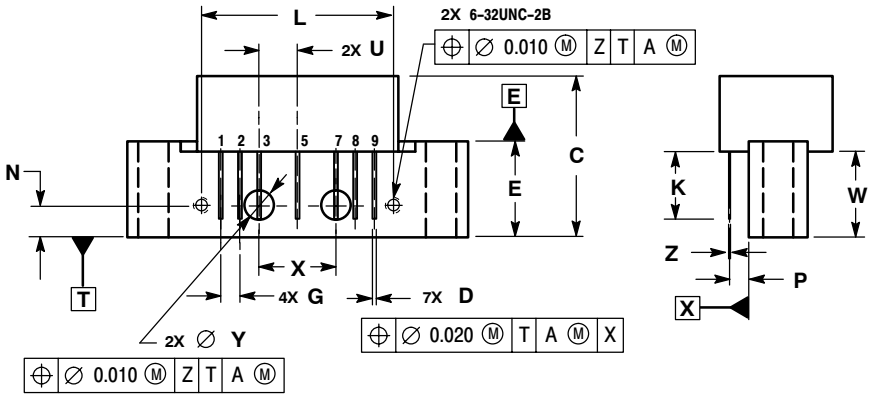

NOTES:
1. DIMENSIONS ARE IN INCHES.
2. INTERPRET DIMENSIONS AND TOLERANCES PER ASME Y14.5M, 1994.

DIM	INCHES MIN	INCHES MAX	MILLIMETERS MIN	MILLIMETERS MAX
A	---	1.775	---	45.085
B	---	1.085	---	27.559
C	---	0.840	---	21.336
D	0.015	0.021	0.381	0.533
E	0.465	0.510	11.811	12.954
F	0.300	0.325	7.62	8.255
G	0.100 BSC		2.540 BSC	
J	0.156 BSC		3.962 BSC	
K	0.315	0.355	8.001	9.017
L	1.000 BSC		25.400 BSC	
N	0.165 BSC		4.191 BSC	
P	0.100 BSC		2.540 BSC	
Q	0.148	0.168	3.759	4.267
R	---	0.600	---	15.24
S	1.500 BSC		38.100 BSC	
U	0.200 BSC		5.080 BSC	
V	---	0.250	---	6.350
W	0.435	---	11.049	---
X	0.400 BSC		10.160 BSC	
Y	0.152	0.163	3.861	4.140
Z	0.009	0.011	0.229	0.279

STYLE 1:
PIN 1. RF INPUT
2. GROUND
3. GROUND
4. DELETED
5. VDC
6. DELETED
7. GROUND
8. GROUND
9. RF OUTPUT

CASE 1302-01
ISSUE E

ARCHIVE INFORMATION
ARCHIVE INFORMATION

查询"MHW9146N"供应商

ARCHIVE INFORMATION

How to Reach Us:

Home Page:
www.freescale.com

E-mail:
support@freescale.com

USA/Europe or Locations Not Listed:
Freescale Semiconductor
Technical Information Center, CH370
1300 N. Alma School Road
Chandler, Arizona 85224
+1-800-521-6274 or +1-480-768-2130
support@freescale.com

Europe, Middle East, and Africa:
Freescale Halbleiter Deutschland GmbH
Technical Information Center
Schatzbogen 7
81829 Muenchen, Germany
+44 1296 380 456 (English)
+46 8 52200080 (English)
+49 89 92103 559 (German)
+33 1 69 35 48 48 (French)
support@freescale.com

Japan:
Freescale Semiconductor Japan Ltd.
Headquarters
ARCO Tower 15F
1-8-1, Shimo-Meguro, Meguro-ku,
Tokyo 153-0064
Japan
0120 191014 or +81 3 5437 9125
support.japan@freescale.com

Asia/Pacific:
Freescale Semiconductor Hong Kong Ltd.
Technical Information Center
2 Dai King Street
Tai Po Industrial Estate
Tai Po, N.T., Hong Kong
+800 2666 8080
support.asia@freescale.com

For Literature Requests Only:
Freescale Semiconductor Literature Distribution Center
P.O. Box 5405
Denver, Colorado 80217
1-800-441-2447 or 303-675-2140
Fax: 303-675-2150
LDCForFreescaleSemiconductor@hibbertgroup.com

Information in this document is provided solely to enable system and software implementers to use Freescale Semiconductor products. There are no express or implied copyright licenses granted hereunder to design or fabricate any integrated circuits or integrated circuits based on the information in this document.

Freescale Semiconductor reserves the right to make changes without further notice to any products herein. Freescale Semiconductor makes no warranty, representation or guarantee regarding the suitability of its products for any particular purpose, nor does Freescale Semiconductor assume any liability arising out of the application or use of any product or circuit, and specifically disclaims any and all liability, including without limitation consequential or incidental damages. “Typical” parameters that may be provided in Freescale Semiconductor data sheets and/or specifications can and do vary in different applications and actual performance may vary over time. All operating parameters, including “Typicals”, must be validated for each customer application by customer’s technical experts. Freescale Semiconductor does not convey any license under its patent rights nor the rights of others. Freescale Semiconductor products are not designed, intended, or authorized for use as components in systems intended for surgical implant into the body, or other applications intended to support or sustain life, or for any other application in which the failure of the Freescale Semiconductor product could create a situation where personal injury or death may occur. Should Buyer purchase or use Freescale Semiconductor products for any such unintended or unauthorized application, Buyer shall indemnify and hold Freescale Semiconductor and its officers, employees, subsidiaries, affiliates, and distributors harmless against all claims, costs, damages, and expenses, and reasonable attorney fees arising out of, directly or indirectly, any claim of personal injury or death associated with such unintended or unauthorized use, even if such claim alleges that Freescale Semiconductor was negligent regarding the design or manufacture of the part.

Freescale™ and the Freescale logo are trademarks of Freescale Semiconductor, Inc.
All other product or service names are the property of their respective owners.
© Freescale Semiconductor, Inc. 2006, 2008. All rights reserved.

ARCHIVE INFORMATION

RoHS-compliant and/or Pb-free versions of Freescale products have the functionality and electrical characteristics of their non-RoHS-compliant and/or non-Pb-free counterparts. For further information, see http://www.freescale.com or contact your Freescale sales representative.

For information on Freescale’s Environmental Products program, go to http://www.freescale.com/epp.

freescale™ semiconductor

Document Number: MHW9146N
Rev. 4, 5/2006