FAIRCHILD SEMICONDUCTOR™

October 1989
Revised August 2000

100371
Low Power Triple 4-Input Multiplexer with Enable

General Description

The 100371 contains three 4-input multiplexers which share a common decoder (inputs S_0 and S_1). Output buffer gates provide true and complement outputs. A HIGH on the Enable input ($\overline{E}$) forces all true outputs LOW (see Truth Table). All inputs have 50 kΩ pull-down resistors.

Features

- 35% power reduction of the 100171
- 2000V ESD protection
- Pin/function compatible with 100171
- Voltage compensated operating range = –4.2V to –5.7V
- Available to industrial grade temperature range

Ordering Code:

Order Number	Package Number	Package Description
100371SC	M24B	24-Lead Small Outline Integrated Circuit (SOIC), JEDEC MS-013, 0.300 Wide
100371PC	N24E	24-Lead Plastic Dual-In-Line Package (PDIP), JEDEC MS-010, 0.400 Wide
10371QC	V28A	28-Lead Plastic Lead Chip Carrier (PLCC), JEDEC MO-047, 0.450 Square
10371QI	V28A	28-Lead Plastic Lead Chip Carrier (PLCC), JEDEC MO-047, 0.450 Square Industrial Temperature Range (–40°C to +85°C)

Devices also available in Tape and Reel. Specify by appending the suffix letter "X" to the ordering code.

Logic Symbol

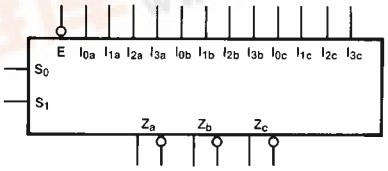

Connection Diagrams

24-Pin DIP/SOIC

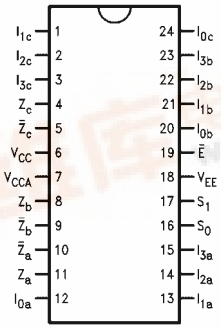

28-Pin PLCC

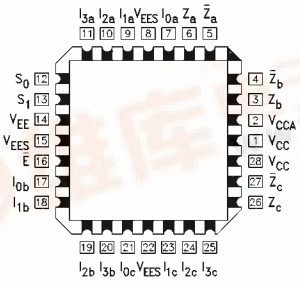

Pin Descriptions

Pin Names	Description
I_{0x}–I_{3x}	Data Inputs
S_0, S_1	Select Inputs
$\overline{E}$	Enable Input (Active LOW)
Z_a–Z_c	Data Outputs
$\overline{Z}_a$–$\overline{Z}_c$	Complementary Data Outputs

Truth Table

Inputs			Outputs
$\overline{E}$	S_0	S_1	Z_n
L	L	L	I_{0x}
L	H	L	I_{1x}
L	L	H	I_{2x}
L	H	H	I_{3x}
H	X	X	L

H = HIGH Voltage Level
L = LOW Voltage Level
X = Don't Care

Logic Diagram

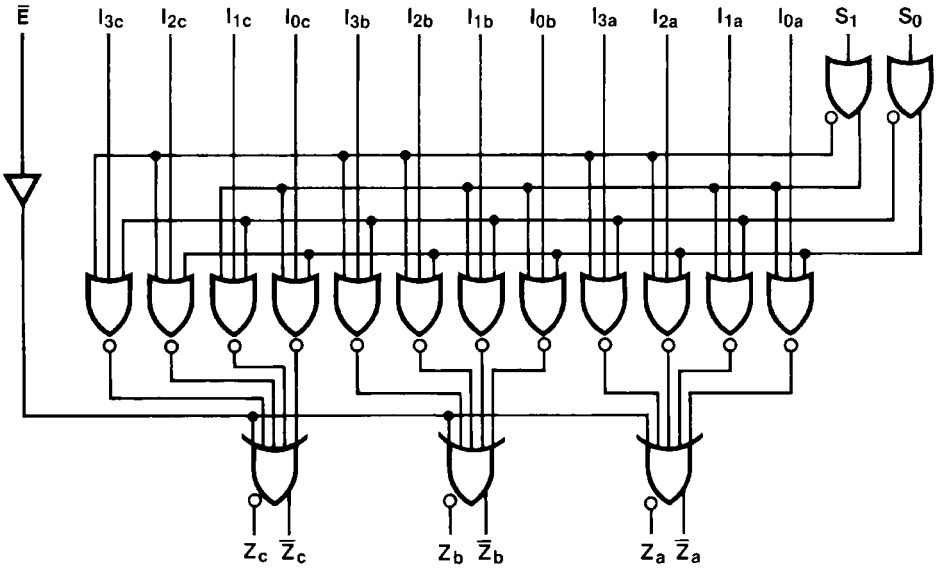

Absolute Maximum Ratings (Note 1)

Storage Temperature (T_{STG})	−65°C to +150°C
Maximum Junction Temperature (T_J)	+150°C
V_{EE} Pin Potential to Ground Pin	−7.0V to +0.5V
Input Voltage (DC)	V_{EE} to +0.5V
Output current (DC Output HIGH)	−50 mA
ESD (Note 2)	≥2000V

Recommended Operating Conditions

Case Temperature (T_C)	
Commercial	0°C to +85°C
Industrial	−40°C to +85°C
Supply Voltage (V_{EE})	−5.7V to −4.2V

Note 1: The "Absolute Maximum Ratings" are those values beyond which the safety of the device cannot be guaranteed. The device should not be operated at these limits. The parametric values defined in the Electrical Characteristics tables are not guaranteed at the absolute maximum rating. The "Recommended Operating Conditions" table will define the conditions for actual device operation.

Note 2: ESD testing conforms to MIL-STD-883, Method 3015.

Commercial Version

DC Electrical Characteristics (Note 3)

V_{EE} = −4.2V to −5.7V, V_{CC} = V_{CCA} = GND, T_C = 0°C to +85°C

Symbol	Parameter	Min	Typ	Max	Units	Conditions	
V_{OH}	Output HIGH Voltage	−1025	−955	−870	mV	V_{IN} =V_{IH} (Max)	Loading with
V_{OL}	Output LOW Voltage	−1830	−1705	−1620	mV	or V_{IL} (Min)	50Ω to −2.0V
V_{OHC}	Output HIGH Voltage	−1035			mV	V_{IN} = V_{IH} (Min)	Loading with
V_{OLC}	Output LOW Voltage			−1610	mV	or V_{IL} (Max)	50Ω to −2.0V
V_{IH}	Input HIGH Voltage	−1165		−870	mV	Guaranteed HIGH Signal for All Inputs	
V_{IL}	Input LOW Voltage	−1830		−1475	mV	Guaranteed LOW Signal for All Inputs	
I_{IL}	Input LOW Current	0.50			μA	V_{IN} = V_{IL} (Min)	
I_{IH}	Input HIGH Current I_{0X}–I_{3X} S_0, S_1, $\overline{E}$			 340 300	μA	V_{IN} = V_{IH} (Max)	
I_{EE}	Power Supply Current	−75		−39	mA	Inputs Open	

Note 3: The specified limits represent the "worst case" value for the parameter. Since these values normally occur at the temperature extremes, additional noise immunity and guardbanding can be achieved by decreasing the allowable system operating ranges. Conditions for testing shown in the tables are chosen to guarantee operation under "worst case" conditions.

DIP AC Electrical Characteristics

V_{EE} = −4.2V to −5.7V, V_{CC} = V_{CCA} = GND

Symbol	Parameter	T_C = 0°C		T_C = +25°C		T_C = +85°C		Units	Conditions
		Min	Max	Min	Max	Min	Max		
t_{PLH} t_{PHL}	Propagation Delay I_{0x}–I_{3x} to Output	0.45	1.50	0.45	1.50	0.45	1.60	ns	Figures 1, 2 (Note 4)
t_{PLH} t_{PHL}	Propagation Delay S_0, S_1 to Output	0.90	2.40	0.90	2.40	1.00	2.60	ns	
t_{PLH} t_{PHL}	Propagation Delay $\overline{E}$ to Output	0.65	2.30	0.65	2.30	0.75	2.40	ns	
t_{TLH} t_{THL}	Transition Time 20% to 80%, 80% to 20%	0.35	1.20	0.35	1.20	0.35	1.20	ns	Figures 1, 2

Note 4: The propagation delay specified is for single output switching. Delays may vary up to 300 ps with multiple outputs switching.

Commercial Version (Continued)
SOIC and PLCC AC Electrical Characteristics

V_{EE} = –4.2V to –5.7V, V_{CC} = V_{CCA} = GND

Symbol	Parameter	T_C = 0°C		T_C = +25°C		T_C = +85°C		Units	Conditions
		Min	Max	Min	Max	Min	Max		
t_{PLH} t_{PHL}	Propagation Delay I_{0x}–I_{3x} to Output	0.45	1.30	0.45	1.30	0.45	1.40	ns	Figures 1, 2 (Note 5)
t_{PLH} t_{PHL}	Propagation Delay S_0, S_1 to Output	0.90	2.20	0.90	2.20	1.00	2.40	ns	
t_{PLH} t_{PHL}	Propagation Delay $\overline{E}$ to Output	0.65	2.10	0.65	2.10	0.75	2.20	ns	
t_{TLH} t_{THL}	Transition Time 20% to 80%, 80% to 20%	0.35	1.10	0.35	1.10	0.35	1.10	ns	Figures 1, 2
t_{OSHL}	Maximum Skew Common Edge Output-to-Output Variation Data to Output Path		400		400		400	ps	PLCC only (Note 6)
t_{OSLH}	Maximum Skew Common Edge Output-to-Output Variation Data to Output Path		490		490		490	ps	PLCC only (Note 6)
t_{OST}	Maximum Skew Opposite Edge Output-to-Output Variation Data to Output Path		490		490		490	ps	PLCC only (Note 6)
t_{PS}	Maximum Skew Pin (Signal) Transition Variation Data to Output Path		430		430		430	ps	PLCC only (Note 6)

Note 5: The propagation delay specified is for single output switching. Delays may vary up to 300 ps with multiple outputs switching.

Note 6: Output-to-Output Skew is defined as the absolute value of the difference between the actual propagation delay for any outputs within the same packaged device. The specifications apply to any outputs switching in the same direction either HIGH-to-LOW (t_{OSHL}), or LOW-to-HIGH (t_{OSLH}), or in opposite directions both HL and LH (t_{OST}). Parameters t_{OST} and t_{PS} guaranteed by design.

Industrial Version

PLCC DC Electrical Characteristics (Note 7)

V_{EE} = –4.2V to –5.7V, V_{CC} = V_{CCA} = GND, T_C = –40°C to +85°C

Symbol	Parameter	T_C = –40°C		T_C = 0°C to +85°C		Units	Conditions	
		Min	Max	Min	Max			
V_{OH}	Output HIGH Voltage	–1085	–870	–1025	–870	mV	V_{IN} =V_{IH} (Max)	Loading with
V_{OL}	Output LOW Voltage	–1830	–1575	–1830	–1620	mV	or V_{IL}(Min)	50Ω to –2.0V
V_{OHC}	Output HIGH Voltage	–1095		–1035		mV	V_{IN} = V_{IH} (Min)	Loading with
V_{OLC}	Output LOW Voltage		–1565		–1610	mV	or V_{IL}(Max)	50Ω to –2.0V
V_{IH}	Input HIGH Voltage	–1170	–870	–1165	–870	mV	Guaranteed HIGH Signal for All Inputs	
V_{IL}	Input LOW Voltage	–1830	–1480	–1830	–1475	mV	Guaranteed LOW Signal for All Inputs	
I_{IL}	Input LOW Current	0.50		0.50		μA	V_{IN} = V_{IL} (Min)	
I_{IH}	Input HIGH Current							
	I_{0X}–I_{3X}		340		340	μA	V_{IN} = V_{IH} (Max)	
	S_0, S_1, $\overline{E}$		300		300			
I_{EE}	Power Supply Current	–75	–35	–75	–39	mA	Inputs Open	

Note 7: The specified limits represent the "worst case" value for the parameter. Since these values normally occur at the temperature extremes, additional noise immunity and guardbanding can be achieved by decreasing the allowable system operating ranges. Conditions for testing shown in the tables are chosen to guarantee operation under "worst case" conditions.

PLCC AC Electrical Characteristics

V_{EE} = –4.2V to –5.7V, V_{CC} = V_{CCA} = GND

Symbol	Parameter	T_C = –40°C		T_C = +25°C		T_C = +85°C		Units	Conditions
		Min	Max	Min	Max	Min	Max		
t_{PLH} t_{PHL}	Propagation Delay I_{0x}–I_{3x} to Output	0.40	1.30	0.45	1.30	0.45	1.40	ns	Figures 1, 2 (Note 8)
t_{PLH} t_{PHL}	Propagation Delay S_0, S_1 to Output	0.70	2.20	0.90	2.20	1.00	2.40	ns	
t_{PLH} t_{PHL}	Propagation Delay $\overline{E}$ to Output	0.65	2.10	0.65	2.10	0.75	2.20	ns	
t_{TLH} t_{THL}	Transition Time 20% to 80%, 80% to 20%	0.20	1.60	0.35	1.10	0.35	1.10	ns	Figures 1, 2

Note 8: The propagation delay specified is for single output switching. Delays may vary up to 300 ps with multiple outputs switching.

Test Circuitry

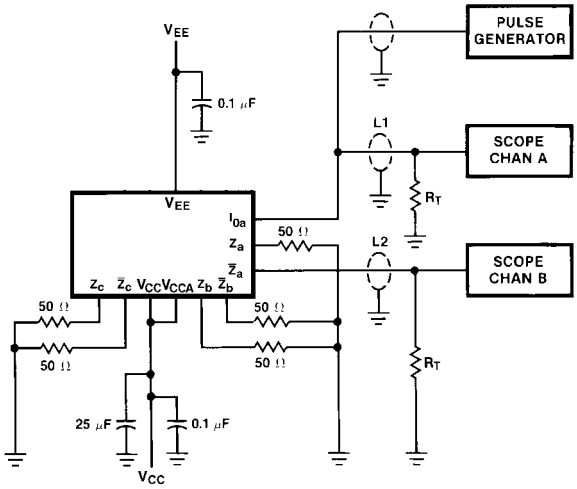

Notes:

V_{CC}, V_{CCA} = +2V, V_{EE} = −2.5V

L1 and L2 = equal length 50Ω impedance lines

R_T = 50Ω terminator internal to scope

Decoupling 0.1 µF from GND to V_{CC} and V_{EE}

All unused outputs are loaded with 50Ω to GND

C_L = Fixture and stray capacitance ≤ 3 pF

FIGURE 1. AC Test Circuit

Switching Waveforms

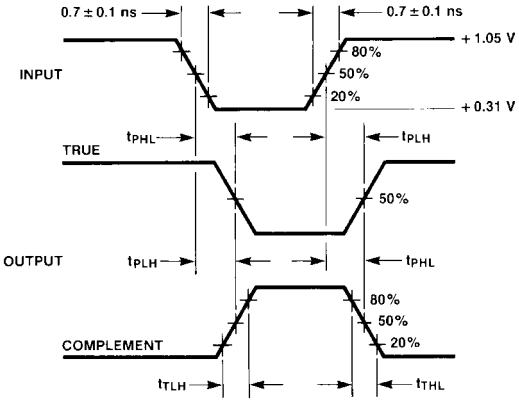

FIGURE 2. Propagation Delay and Transition Times

Physical Dimensions inches (millimeters) unless otherwise noted

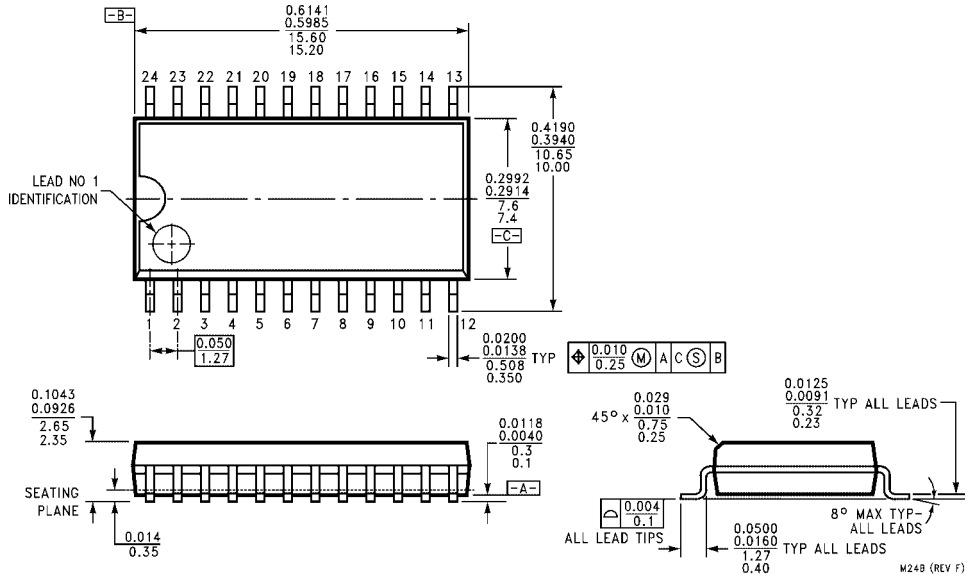

24-Lead Small Outline Integrated Circuit (SOIC), JEDEC MS-013, 0.300 Wide
Package Number M24B

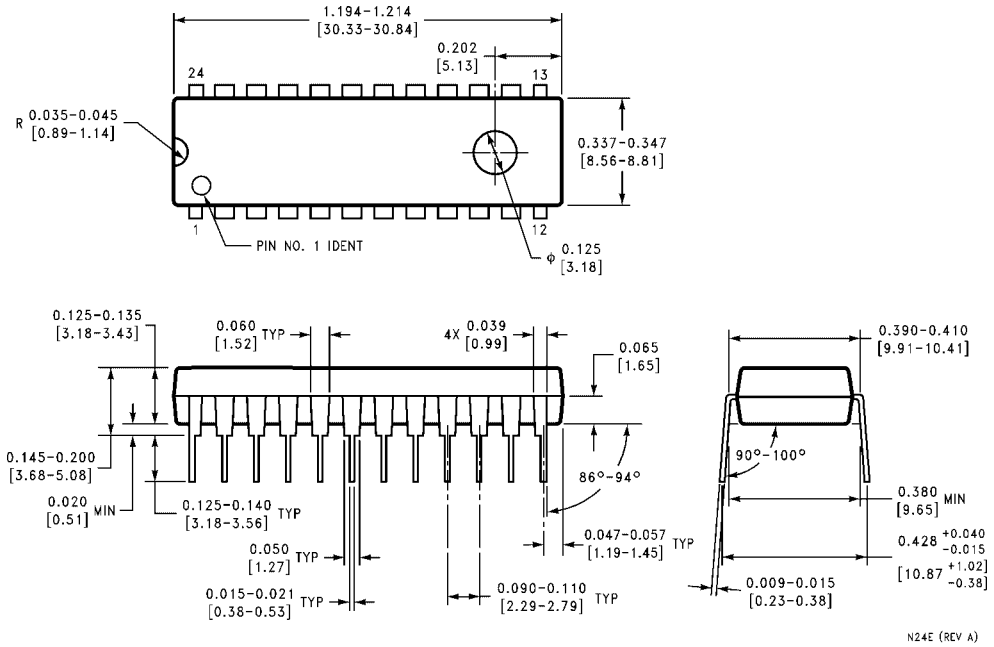

24-Lead Plastic Dual-In-Line Package (PDIP), JEDEC MS-010, 0.400 Wide
Package Number N24E

Physical Dimensions inches (millimeters) unless otherwise noted (Continued)

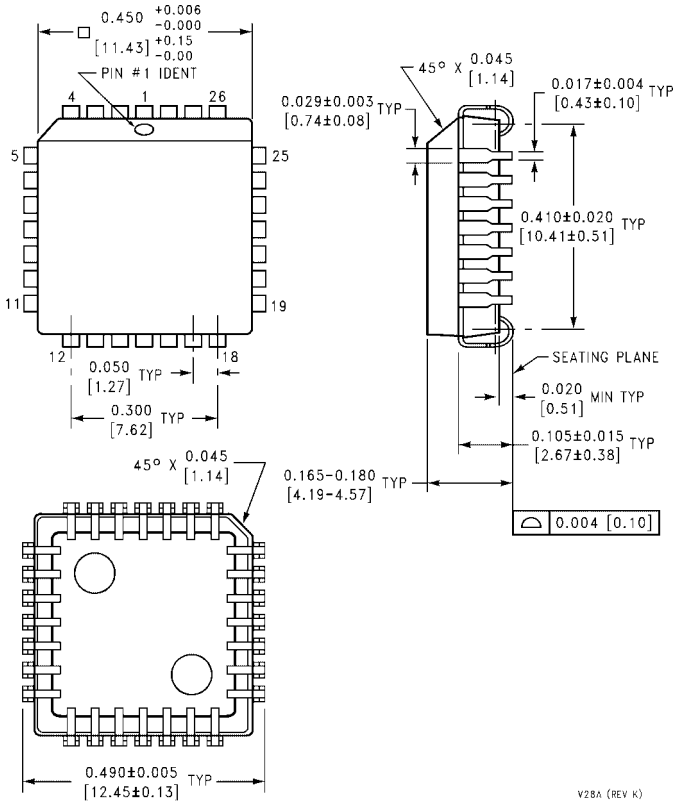

28-Lead Plastic Lead Chip Carrier (PLCC), JEDEC MO-047, 0.450 Square
Package Number V28A