查询"6637"供应商

Features

- Bushing mount
- Excellent resolution
- High rotational life
- Non-standard features and specifications available

6637 - Precision Potentiometer

Electrical Characteristics[1]

Standard Resistance Range.....1 K to 100 K ohms
Total Resistance Tolerance .....±10 %
Independent Linearity .....±1 %
Effective Electrical Angle .....340 ° ±3 °
End Voltage .....0.5 % maximum
Output Smoothness .....0.1 % maximum
Dielectric Withstanding Voltage (MIL-STD-202, Method 301)
Sea Level .....750 VAC minimum
Power Rating (Voltage Limited By Power Dissipation or 300 VAC, Whichever is Less)
+70 °C.....1 watt
+125 °C.....0 watt
Insulation Resistance (500 VDC).....1,000 megohms minimum
Resolution.....Essentially infinite

Environmental Characteristics[1]

Operating Temperature Range.....+1 °C to +125 °C
Storage Temperature Range.....-65 °C to +125 °C
Temperature Coefficient Over Storage Temperature Range.....±500 ppm/°C maximum
Vibration .....15 G
Wiper Bounce.....0.1 millisecond maximum
Total Resistance Shift .....±5 % maximum
Voltage Ratio Shift .....±0.5 % maximum
Shock .....50 G
Wiper Bounce.....0.1 millisecond maximum
Total Resistance Shift .....±5 % maximum
Voltage Ratio Shift .....±0.5 % maximum
Load Life.....1,000 hours, 1 watt
Total Resistance Shift .....±10 % maximum
Rotational Life (No Load) .....10,000,000 shaft revolutions
Total Resistance Shift .....±10 % maximum
Moisture Resistance (MIL-STD-202, Method 106)
Total Resistance Shift .....±15 % maximum
IP Rating .....IP 40

Mechanical Characteristics[1]

Mechanical Angle .....Continuous
Torque (Starting & Running).....0.40 N-cm (0.5 oz.-in.) maximum
Mounting.....170-200 N-cm (15-18 lb.-in.) maximum
Shaft Runout.....0.025 mm (0.001 in.) T.I.R.
Shaft End Play .....0.13 mm (0.005 in.) T.I.R.
Shaft Radial Play .....0.13 mm (0.005 in.) T.I.R.
Backlash .....0.1 ° maximum
Weight .....16 gm
Terminals.....Rear turret type
Soldering Condition.....Recommended hand soldering using Sn95/Ag5 no clean solder, 0.025 " wire diameter. Maximum temperature 399 °C (750 °F) for 3 seconds. No wash process to be used with no clean flux.
Marking .....Manufacturer's name and part number, resistance value and tolerance, linearity tolerance, wiring diagram, and date code.
Ganging (Multiple Section Potentiometers).....1 up maximum
Hardware.....One lockwasher (H-37-2) and one mounting nut (H-38-2) is shipped with each potentiometer.

[1]At room ambient: +25 °C nominal and 50 % relative humidity, except as noted.

Recommended Part Numbers

Part Numbers	Resistance (Ω)
6637S-1-102	**1,000**
6637S-1-502	**5,000**
6637S-1-103	**10,000**

BOLDFACE LISTINGS ARE IN STOCK AND READILY AVAILABLE THROUGH DISTRIBUTION.

FOR OTHER OPTIONS CONSULT FACTORY.

Product Dimensions

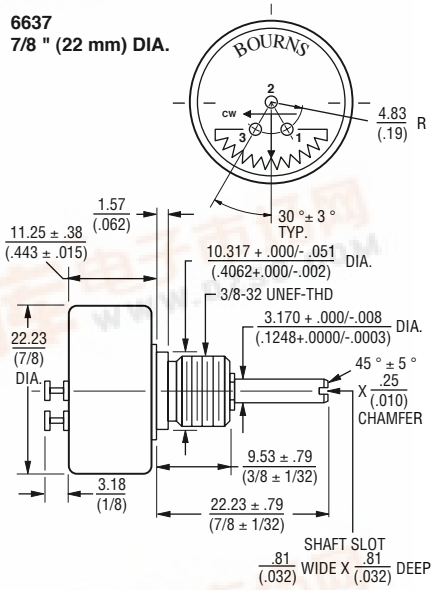

NOTE: SHAFT SUPPORTED BY FRONT SLEEVE BEARING.

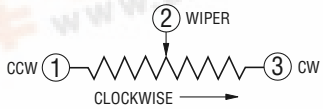

DIMENSIONS: MM (IN.)

REV. 06/06

*RoHS Directive 2002/95/EC Jan 27 2003 including Annex
Specifications are subject to change without notice.
Customers should verify actual device performance in their specific applications.

pdf.dzsc.com