查询"SKY65013"供应商

SKYWORKS®

DATA SHEET

SKY65013-70LF: InGaP Cascadable Amplifier LF–7 GHz

Features

- Broadband: LF–7 GHz
- Small signal gain: 12.5 dB typ. @ 2 GHz
- High output 3rd order intercept: +29 dBm typ.
- $OP_{1\ dB}$: 12.5 dBm typ. @ 2 GHz
- Input and output impedance: 50 Ω nominal
- Single, positive DC supply voltage
- SOT-89 package
- Available lead (Pb)-free, RoHS compliant and Green MSL-1 @ 260 °C per JEDEC J-STD-020

Applications

- Wireless infrastructure: WLAN, HLAN, DBS, broadband, cellular base stations
- Test instrumentation
- CATV

Functional Block Diagram

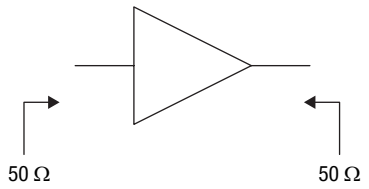

NEW Skyworks Green products are lead (Pb)-free, RoHS (Restriction of Hazardous Substances)-compliant, conform to the EIA/EICTA/JEITA Joint Industry Guide (JIG) Level A guidelines, and are free from antimony trioxide and brominated flame retardants.

Description

The SKY65013 is a general-purpose, broadband amplifier fabricated from Skyworks InGaP HBT process and packaged in a SOT-89 package. The amplifier's input and output impedances are 50 Ω, which allows these amplifiers to be cascaded without external impedance matching networks. The typical -3 dB bandwidth of the SKY65013 is LF–7 GHz.

This amplifier is also available in the plastic micro-X package (SKY65013-214LF) and the SC-88 package (SKY65013-92LF).

The SKY65013 is lead (Pb)-free and RoHS compliant. It is also "Green"—environmentally friendly, containing no antimony or halogens, such as bromine.

A populated evaluation board is available upon request.

Full scattering parameters for this part are available for download at www.skyworksinc.com

查询"SKY65013"供应商

Electrical Specifications at 25 °C

T = 25 °C, I_S = 40 mA, P_{IN} = 0 dBm, Z_0 = 50 Ω, measured in evaluation board, unless otherwise noted

Parameter	Symbol	Condition	Frequency	Min.	Typ.	Max.	Unit
Small signal gain	GP		2 GHz	11.5	12.5	13.5	dB
3 dB gain bandwidth	$BW_{3\ dB}$				7		GHz
Noise figure	NF		2 GHz		5.5		dB
Output power at 1 dB compression	$OP_{1\ dB}$		2 GHz	11.5	12.5		dBm
Input and output VSWR	VSWR		0.1–7 GHz		1.9:1	2.0:1	
Output third order intercept point	OIP3	P_{IN} = 0 dBm each tone, Δf = 10 MHz	2 GHz		29		dBm
Operating voltage	V_D	Measured at pin 3		3.3	3.5	3.7	V
Reverse isolation	$\|s_{12}\|$		0.1–12 GHz		17		dB
Gain flatness			10 MHz–8 GHz		±1.5		dB
Thermal resistance	θ_{JC}				70		°C/W

Typical Performance Data

Z_0 = 50 Ω, I_S = 40 mA, measured in evaluation board, unless otherwise noted

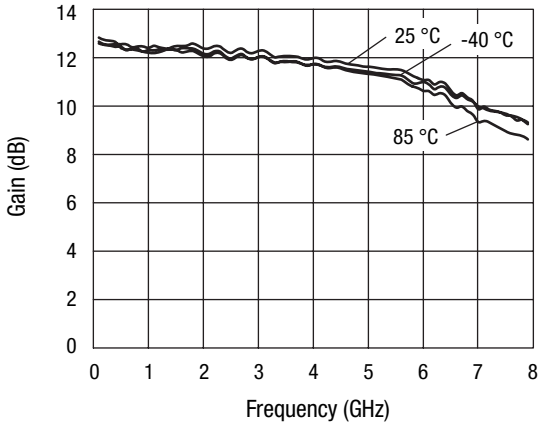

Small Signal Gain vs. Frequency

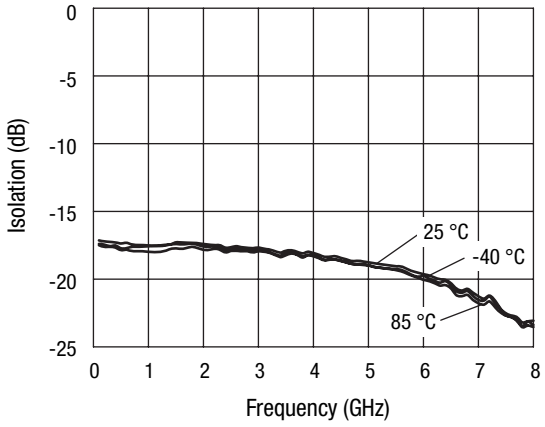

Isolation vs. Frequency

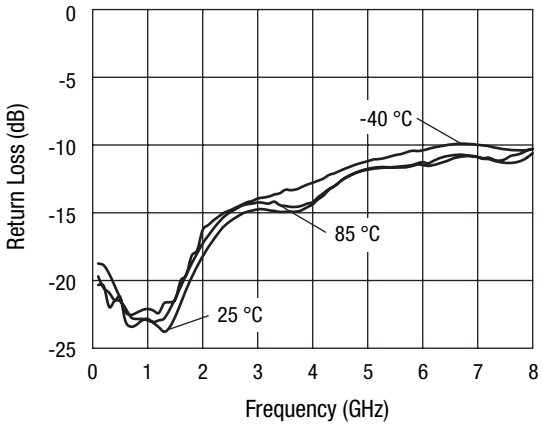

Input Return Loss vs. Frequency

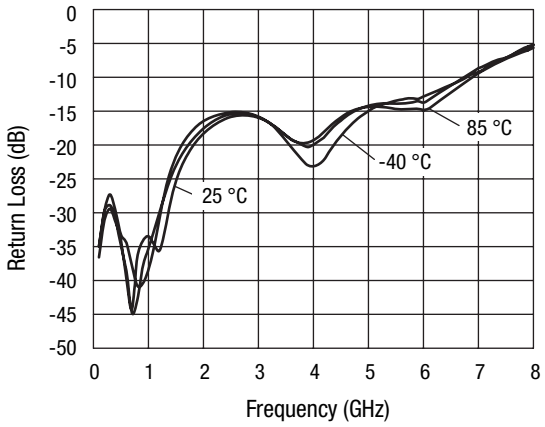

Output Return Loss vs. Frequency

查询"SKY65013"供应商

Absolute Maximum Ratings

Characteristic	Value
RF input power	15 dBm
Supply voltage	5 V
Supply current	120 mA
Power dissipation @ T = 25 °C	600 mW
Operating temperature	-40 °C to +85 °C
Storage temperature	-65 °C to +125 °C

Performance is guaranteed only under the conditions listed in the specifications table and is not guaranteed under the full range(s) described by the Absolute Maximum specifications. Exceeding any of the absolute maximum/minimum specifications may result in permanent damage to the device and will void the warranty.

CAUTION: *Although this device is designed to be as robust as possible, Electrostatic Discharge (ESD) can damage this device. This device must be protected at all times from ESD. Static charges may easily produce potentials of several kilovolts on the human body or equipment, which can discharge without detection. Industry-standard ESD precautions must be employed at all times.*

SOT-89

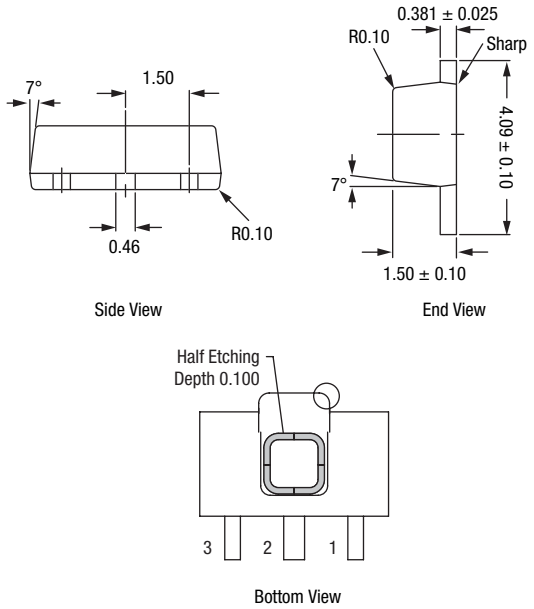

All measurements are in millimeters

Pin Out (Top View)

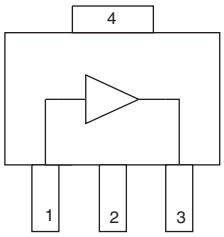

Pin Descriptions

Pin Number	Pin Name	Description
2, 4	GND	Equipotential point – Internal circuit common, which must be connected to the PCB ground or common via the lowest possible impedance. Pin 4 must be connected via a low thermal resistance path to a good heatsink.
1	Input	RF input – RF input with 50 Ω nominal input impedance. An internally generated DC voltage is present at this pin, so an external DC block should be used to connect this pin to the external circuit.
3	Output	RF output – DC supply voltage input and RF output with 50 Ω nominal output impedance. The nominal voltage required at this pin is listed in the Electrical Specifications Table. Supply current is determined by an external resistor connected between the DC power supply and this pin.

Recommended Solder Reflow Profiles

Refer to the *"Recommended Solder Reflow Profile"* Application Note.

Tape and Reel Information

Refer to the *"Discrete Devices and IC Switch/Attenuators Tape and Reel Package Orientation"* Application Note.

查询"SKY65013"供应商

Evaluation Board

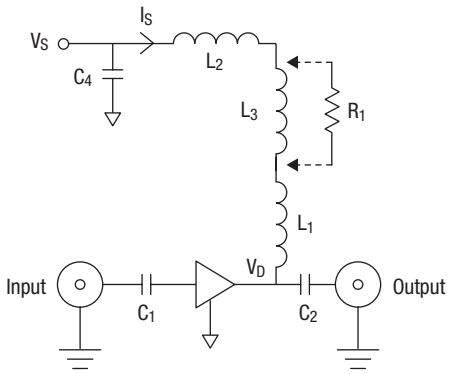

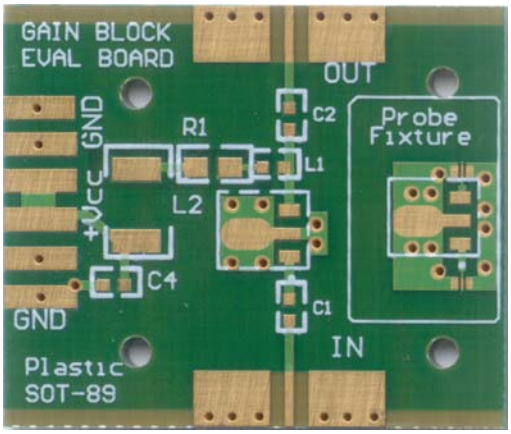

The SKY65013 evaluation board comprises the SKY65013 amplifier, the input and output of which are connected via 50 Ω microstrip transmission lines with DC blocking capacitors, C_1 and C_2, to the input and output SMA connectors, respectively.

The positive supply voltage, V_S, is connected to pin 3, RF Output of the amplifier via the decoupling network which consists of C_4, L_1, L_2 and R_1. The power supply current, I_S, must be limited, either via the current limit function of an external bench power supply, or by replacing L_3 with resistor R_1, the value of which is given in the Current Limiting Resistor Values table. The evaluation board is shipped with L_3 in place, which shifts an in-band series resonance of the supply decoupling network out of band. For low frequency applications, R_1 may be used to conveniently limit supply current on the evaluation board.

The evaluation board also contains a probe fixture which facilitates the direct measurement of the s parameters of the SKY65013. The probe fixture comprises a very short coplanar waveguide (CPW) transmission line to pin 1 and an identical line to pin 3. All other pins of the amplifier are grounded. The CPW transmission lines are compatible with ground-signal-ground wafer probe tips, which can be connected to the RF ports of a vector network analyzer (VNA) via coaxial cables. The very small electrical length of these CPW transmission lines obviates the need to de-embed their effects from the s parameters that are measured. The supply constant current must be applied via the bias tee, which is typically integrated into the VNA, which is cascade with the output pin of the amplifier.

Evaluation Board Parts List

Component	Description	Value	Size	Suggested Part Number	Comments
C_1, C_2, C_4	Capacitor	47 nF	0603		
L_1	Inductor	33 nH	0603		
L_2	Ferrite bead			FBMH4525HM162N-T	
R_1	Resistor	See Current Limiting Resistor Values Table	0603		
U_1	Amplifier			SKY65013	

Current Limiting Resistor Values

V_S, V	R_1 Resistance, Ω	Minimum Power Dissipation Rating, mW
4	13	125
4.6	28	125
5	38	125
6	63	125
8	113	250
9	138	500
10	163	500
12	213	500

查询"SKY65013"供应商

Copyright © 2002, 2003, 2004, 2005, 2006, Skyworks Solutions, Inc. All Rights Reserved.

Information in this document is provided in connection with Skyworks Solutions, Inc. (“Skyworks”) products or services. These materials, including the information contained herein, are provided by Skyworks as a service to its customers and may be used for informational purposes only by the customer. Skyworks assumes no responsibility for errors or omissions in these materials or the information contained herein. Skyworks may change its documentation, products, services, specifications or product descriptions at any time, without notice. Skyworks makes no commitment to update the materials or information and shall have no responsibility whatsoever for conflicts, incompatibilities, or other difficulties arising from any future changes.

No license, whether express, implied, by estoppel or otherwise, is granted to any intellectual property rights by this document. Skyworks assumes no liability for any materials, products or information provided hereunder, including the sale, distribution, reproduction or use of Skyworks products, information or materials, except as may be provided in Skyworks Terms and Conditions of Sale.

THE MATERIALS, PRODUCTS AND INFORMATION ARE PROVIDED “AS IS” WITHOUT WARRANTY OF ANY KIND, WHETHER EXPRESS, IMPLIED, STATUTORY, OR OTHERWISE, INCLUDING FITNESS FOR A PARTICULAR PURPOSE OR USE, MERCHANTABILITY, PERFORMANCE, QUALITY OR NON-INFRINGEMENT OF ANY INTELLECTUAL PROPERTY RIGHT; ALL SUCH WARRANTIES ARE HEREBY EXPRESSLY DISCLAIMED. SKYWORKS DOES NOT WARRANT THE ACCURACY OR COMPLETENESS OF THE INFORMATION, TEXT, GRAPHICS OR OTHER ITEMS CONTAINED WITHIN THESE MATERIALS. SKYWORKS SHALL NOT BE LIABLE FOR ANY DAMAGES, INCLUDING BUT NOT LIMITED TO ANY SPECIAL, INDIRECT, INCIDENTAL, STATUTORY, OR CONSEQUENTIAL DAMAGES, INCLUDING WITHOUT LIMITATION, LOST REVENUES OR LOST PROFITS THAT MAY RESULT FROM THE USE OF THE MATERIALS OR INFORMATION, WHETHER OR NOT THE RECIPIENT OF MATERIALS HAS BEEN ADVISED OF THE POSSIBILITY OF SUCH DAMAGE.

Skyworks products are not intended for use in medical, lifesaving or life-sustaining applications, or other equipment in which the failure of the Skyworks products could lead to personal injury, death, physical or environmental damage. Skyworks customers using or selling Skyworks products for use in such applications do so at their own risk and agree to fully indemnify Skyworks for any damages resulting from such improper use or sale.

Customers are responsible for their products and applications using Skyworks products, which may deviate from published specifications as a result of design defects, errors, or operation of products outside of published parameters or design specifications. Customers should include design and operating safeguards to minimize these and other risks. Skyworks assumes no liability for applications assistance, customer product design, or damage to any equipment resulting from the use of Skyworks products outside of stated published specifications or parameters.

Skyworks, the Skyworks symbol, and “Breakthrough Simplicity” are trademarks or registered trademarks of Skyworks Solutions, Inc., in the United States and other countries. Third-party brands and names are for identification purposes only, and are the property of their respective owners. Additional information, including relevant terms and conditions, posted at www.skyworksinc.com, are incorporated by reference.