查询"DSPIC33FJ12MC02ESP"供应商

dsPIC33FJ12MC201/202
Data Sheet

High-Performance, 16-Bit Digital Signal Controllers

pdf.dzsc.com

查询"DSPIC33FJ12MC02ESP"供应商

Note the following details of the code protection feature on Microchip devices:

- Microchip products meet the specification contained in their particular Microchip Data Sheet.
- Microchip believes that its family of products is one of the most secure families of its kind on the market today, when used in the intended manner and under normal conditions.
- There are dishonest and possibly illegal methods used to breach the code protection feature. All of these methods, to our knowledge, require using the Microchip products in a manner outside the operating specifications contained in Microchip's Data Sheets. Most likely, the person doing so is engaged in theft of intellectual property.
- Microchip is willing to work with the customer who is concerned about the integrity of their code.
- Neither Microchip nor any other semiconductor manufacturer can guarantee the security of their code. Code protection does not mean that we are guaranteeing the product as "unbreakable."

Code protection is constantly evolving. We at Microchip are committed to continuously improving the code protection features of our products. Attempts to break Microchip's code protection feature may be a violation of the Digital Millennium Copyright Act. If such acts allow unauthorized access to your software or other copyrighted work, you may have a right to sue for relief under that Act.

Information contained in this publication regarding device applications and the like is provided only for your convenience and may be superseded by updates. It is your responsibility to ensure that your application meets with your specifications. MICROCHIP MAKES NO REPRESENTATIONS OR WARRANTIES OF ANY KIND WHETHER EXPRESS OR IMPLIED, WRITTEN OR ORAL, STATUTORY OR OTHERWISE, RELATED TO THE INFORMATION, INCLUDING BUT NOT LIMITED TO ITS CONDITION, QUALITY, PERFORMANCE, MERCHANTABILITY OR FITNESS FOR PURPOSE. Microchip disclaims all liability arising from this information and its use. Use of Microchip devices in life support and/or safety applications is entirely at the buyer's risk, and the buyer agrees to defend, indemnify and hold harmless Microchip from any and all damages, claims, suits, or expenses resulting from such use. No licenses are conveyed, implicitly or otherwise, under any Microchip intellectual property rights.

QUALITY MANAGEMENT SYSTEM
CERTIFIED BY DNV
ISO/TS 16949:2002

Trademarks

The Microchip name and logo, the Microchip logo, Accuron, dsPIC, KEELOQ, KEELOQ logo, microID, MPLAB, PIC, PICmicro, PICSTART, PRO MATE, PowerSmart, rfPIC, and SmartShunt are registered trademarks of Microchip Technology Incorporated in the U.S.A. and other countries.

AmpLab, FilterLab, Linear Active Thermistor, Migratable Memory, MXDEV, MXLAB, PS logo, SEEVAL, SmartSensor and The Embedded Control Solutions Company are registered trademarks of Microchip Technology Incorporated in the U.S.A.

Analog-for-the-Digital Age, Application Maestro, CodeGuard, dsPICDEM, dsPICDEM.net, dsPICworks, ECAN, ECONOMONITOR, FanSense, FlexROM, fuzzyLAB, In-Circuit Serial Programming, ICSP, ICEPIC, Mindi, MiWi, MPASM, MPLAB Certified logo, MPLIB, MPLINK, PICkit, PICDEM, PICDEM.net, PICLAB, PICtail, PowerCal, PowerInfo, PowerMate, PowerTool, REAL ICE, rfLAB, rfPICDEM, Select Mode, Smart Serial, SmartTel, Total Endurance, UNI/O, WiperLock and ZENA are trademarks of Microchip Technology Incorporated in the U.S.A. and other countries.

SQTP is a service mark of Microchip Technology Incorporated in the U.S.A.

All other trademarks mentioned herein are property of their respective companies.

© 2007, Microchip Technology Incorporated, Printed in the U.S.A., All Rights Reserved.

Printed on recycled paper.

Microchip received ISO/TS-16949:2002 certification for its worldwide headquarters, design and wafer fabrication facilities in Chandler and Tempe, Arizona; Gresham, Oregon and design centers in California and India. The Company's quality system processes and procedures are for its PIC® MCUs and dsPIC® DSCs, KEELOQ® code hopping devices, Serial EEPROMs, microperipherals, nonvolatile memory and analog products. In addition, Microchip's quality system for the design and manufacture of development systems is ISO 9001:2000 certified.

查询"DSPIC33FJ12MC02ESP"供应商

MICROCHIP

dsPIC33FJ12MC201/202

High-Performance, 16-bit Digital Signal Controllers

Operating Range:

- Up to 40 MIPS operation (at 3.0-3.6V):
  - Industrial temperature range (-40°C to +85°C)
  - Extended temperature range (-40°C to +125°C)

High-Performance DSC CPU:

- Modified Harvard architecture
- C compiler optimized instruction set
- 16-bit wide data path
- 24-bit wide instructions
- Linear program memory addressing up to 4M instruction words
- Linear data memory addressing up to 64 Kbytes
- 83 base instructions: mostly 1 word/1 cycle
- Two 40-bit accumulators with rounding and saturation options
- Flexible and powerful addressing modes:
  - Indirect
  - Modulo
  - Bit-Reversed
- Software stack
- 16 x 16 fractional/integer multiply operations
- 32/16 and 16/16 divide operations
- Single-cycle multiply and accumulate:
  - Accumulator write back for DSP operations
  - Dual data fetch
- Up to ±16-bit shifts for up to 40-bit data

Timers/Capture/Compare/PWM:

- Timer/Counters, up to three 16-bit timers
  - Can pair up to make one 32-bit timer
  - 1 timer runs as Real-Time Clock with external 32.768 kHz oscillator
  - Programmable prescaler
- Input Capture (up to 4 channels):
  - Capture on up, down or both edges
  - 16-bit capture input functions
  - 4-deep FIFO on each capture
- Output Compare (up to 2 channels):
  - Single or Dual 16-Bit Compare mode
  - 16-bit Glitchless PWM mode

Interrupt Controller:

- 5-cycle latency
- 118 interrupt vectors
- Up to 26 available interrupt sources
- Up to 3 external interrupts
- 7 programmable priority levels
- 4 processor exceptions

Digital I/O:

- Peripheral pin Select functionality
- Up to 21 programmable digital I/O pins
- Wake-up/Interrupt-on-Change for up to 21 pins
- Output pins can drive from 3.0V to 3.6V
- Up to 5V output with open drain configuration
- All digital input pins are 5V tolerant
- 4 mA sink on all I/O pins

On-Chip Flash and SRAM:

- Flash program memory (12 Kbytes)
- Data SRAM (1024 bytes)
- Boot and General Security for program Flash

System Management:

- Flexible clock options:
  - External, crystal, resonator, internal RC
  - Fully integrated Phase-Locked Loop (PLL)
  - Extremely low jitter PLL
- Power-up Timer
- Oscillator Start-up Timer/Stabilizer
- Watchdog Timer with its own RC oscillator
- Fail-Safe Clock Monitor
- Reset by multiple sources

Power Management:

- On-chip 2.5V voltage regulator
- Switch between clock sources in real time
- Idle, Sleep and Doze modes with fast wake-up

查询"DSPIC33FJ12MC02ESP"供应商

Motor Control Peripherals:

- 6-channel 16-bit Motor Control PWM
  - 3 duty cycle generators
  - Independent or Complementary mode
  - Programmable dead time and output polarity
  - Edge-aligned or center-aligned
  - Manual output override control
  - 1 Fault input
  - Trigger for ADC conversions
  - PWM frequency for 16-bit resolution (@ 40 MIPS) = 1220 Hz for Edge-Aligned mode, 610 Hz for Center-Aligned mode
  - PWM frequency for 11-bit resolution (@ 40 MIPS) = 39.1 kHz for Edge-Aligned mode, 19.55 kHz for Center-Aligned mode
- 2-channel 16-bit Motor Control PWM
  - 1 duty cycle generator
  - Independent or Complementary mode
  - Programmable dead time and output polarity
  - Edge-aligned or center-aligned
  - Manual output override control
  - 1 Fault input
  - Trigger for ADC conversions
  - PWM frequency for 16-bit resolution (@ 40 MIPS) = 1220 Hz for Edge-Aligned mode, 610 Hz for Center-Aligned mode
  - PWM frequency for 11-bit resolution (@ 40 MIPS) = 39.1 kHz for Edge-Aligned mode, 19.55 kHz for Center-Aligned mode
- Quadrature Encoder Interface module:
  - Phase A, Phase B and index pulse input
  - 16-bit up/down position counter
  - Count direction status
  - Position Measurement (x2 and x4) mode
  - Programmable digital noise filters on inputs
  - Alternate 16-bit Timer/Counter mode
  - Interrupt on position counter rollover/underflow

Analog-to-Digital Converters (ADCs):

- 10-bit, 1.1 Msps or 12-bit, 500 Ksps conversion:
  - 2 and 4 simultaneous samples (10-bit ADC)
  - Up to 6 input channels with auto-scanning
  - Conversion start can be manual or synchronized with 1 of 4 trigger sources
  - Conversion possible in Sleep mode
  - ±2 LSb max integral nonlinearity
  - ±1 LSb max differential nonlinearity

CMOS Flash Technology:

- Low-power, high-speed Flash technology
- Fully static design
- 3.3V (±10%) operating voltage
- Industrial and Extended temperature
- Low power consumption

Communication Modules:

- 4-wire SPI:
  - Framing supports I/O interface to simple codecs
  - Supports 8-bit and 16-bit data
  - Supports all serial clock formats and sampling modes
- I^2C™:
  - Full Multi-Master Slave mode support
  - 7-bit and 10-bit addressing
  - Bus collision detection and arbitration
  - Integrated signal conditioning
  - Slave address masking
- UART:
  - Interrupt on address bit detect
  - Interrupt on UART error
  - Wake-up on Start bit from Sleep mode
  - 4-character TX and RX FIFO buffers
  - LIN bus support
  - IrDA® encoding and decoding in hardware
  - High-Speed Baud mode
  - Hardware Flow Control with CTS and RTS

Packaging:

- 20-pin SDIP/SSOP
- 28-pin SDIP/SOIC/QFN

Note:	See the device variant tables for exact peripheral features per device.

 © 2007 Microchip Technology Inc.

查询"DSPIC33FJ12MC02ESP"供应商

dsPIC33FJ12MC201/202 PRODUCT FAMILIES

The device names, pin counts, memory sizes and peripheral availability of each device are listed below. The following pages show their pinout diagrams.

dsPIC33FJ12MC201/202 Controller Families

Device	Pins	Program Flash Memory (Kbyte)	RAM (Kbyte)	Remappable Peripherals								10-Bit/12-Bit ADC	I²C™	I/O Pins	Packages
				Remappable Pins	16-bit Timer	Input Capture	Output Compare Standard PWM	Motor Control PWM	Quadrature Encoder Interface	UART	SPI				
dsPIC33FJ12MC201	20	12	1	10	3(1)	4	2	4ch(2) 2ch(2)	1	1	1	1ADC, 4 ch	1	15	SDIP SSOP
dsPIC33FJ12MC202	28	12	1	16	3(1)	4	2	6ch(2) 2ch(2)	1	1	1	1ADC. 6 ch	1	21	SDIP SOIC QFN

Note 1: Only 2 out of 3 timers are remappable.
2: Only PWM fault inputs are remappable.

查询"DSPIC33FJ12MC02ESP"供应商

dsPIC33FJ12MC201 20-Pin SDIP/SSOP Package Diagram

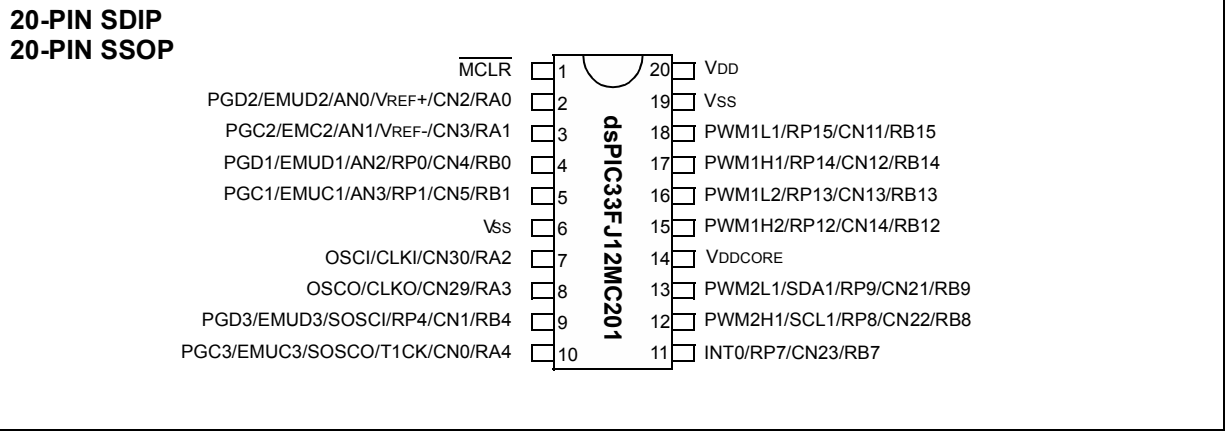

dsPIC33FJ12MC202 28-Pin SDIP/SOIC Package Diagram

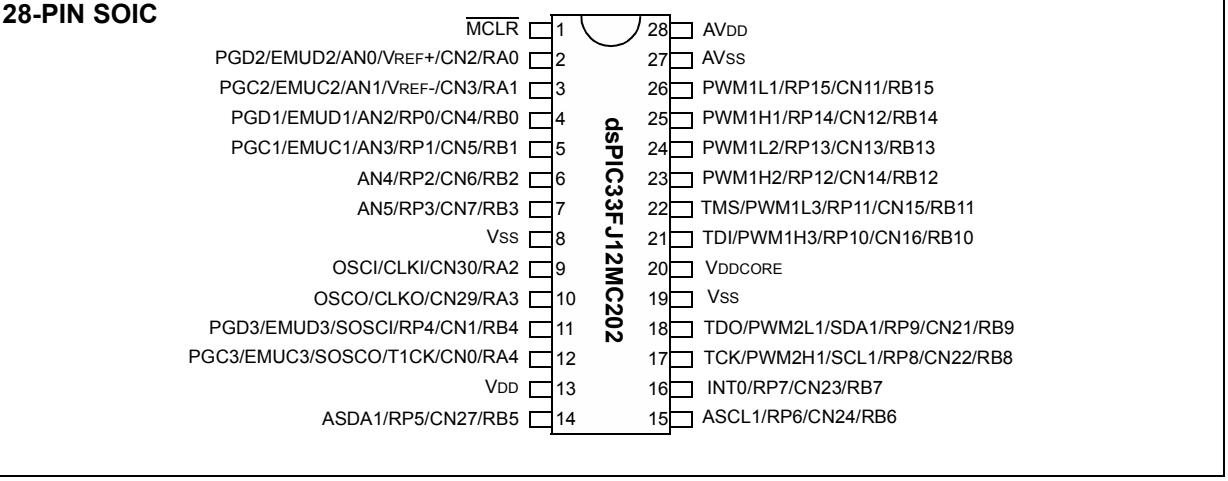

 © 2007 Microchip Technology Inc.

查询"DSPIC33FJ12MC02ESP"供应商

dsPIC33FJ12MC202 28-Pin QFN Package Diagram

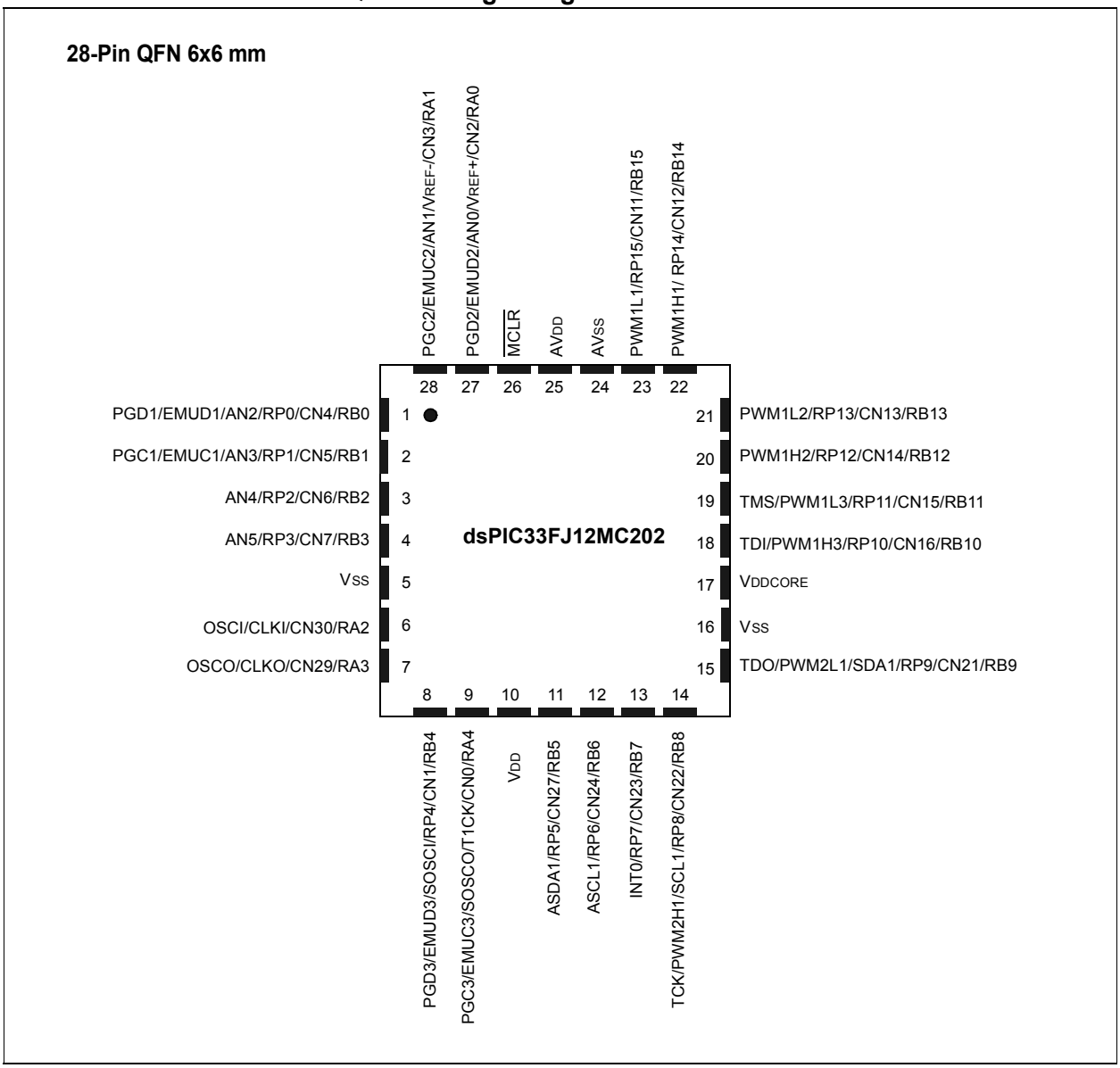

查询"DSPIC33FJ12MC02ESP"供应商

Table of Contents

dsPIC33FJ12MC201/202 Product Families 3
1.0 Device Overview 7
2.0 CPU 11
3.0 Memory Organization 23
4.0 Flash Program Memory 49
5.0 Resets 55
6.0 Interrupt Controller 61
7.0 Oscillator Configuration 93
8.0 Power-Saving Features 103
9.0 I/O Ports 105
10.0 Timer1 129
11.0 Timer2/3 feature 131
12.0 Input Capture 137
13.0 Output Compare 139
14.0 Motor Control PWM Module 143
15.0 Quadrature Encoder Interface (QEI) Module 165
16.0 Serial Peripheral Interface (SPI) 173
17.0 Inter-Integrated Circuit (I^2C) 181
18.0 Universal Asynchronous Receiver Transmitter (UART) 191
19.0 10-bit/12-bit Analog-to-Digital Converter (ADC) 199
20.0 Special Features 211
21.0 Instruction Set Summary 217
22.0 Development Support 225
23.0 Electrical Characteristics 229
24.0 Packaging Information 267
Appendix A: Revision History 273
Index 275
The Microchip Web Site 279
Customer Change Notification Service 279
Customer Support 279
Reader Response 280
Product Identification System 281

TO OUR VALUED CUSTOMERS

It is our intention to provide our valued customers with the best documentation possible to ensure successful use of your Microchip products. To this end, we will continue to improve our publications to better suit your needs. Our publications will be refined and enhanced as new volumes and updates are introduced.

If you have any questions or comments regarding this publication, please contact the Marketing Communications Department via E-mail at **docerrors@microchip.com** or fax the **Reader Response Form** in the back of this data sheet to (480) 792-4150. We welcome your feedback.

Most Current Data Sheet

To obtain the most up-to-date version of this data sheet, please register at our Worldwide Web site at:

http://www.microchip.com

You can determine the version of a data sheet by examining its literature number found on the bottom outside corner of any page. The last character of the literature number is the version number, (e.g., DS30000A is version A of document DS30000).

Errata

An errata sheet, describing minor operational differences from the data sheet and recommended workarounds, may exist for current devices. As device/documentation issues become known to us, we will publish an errata sheet. The errata will specify the revision of silicon and revision of document to which it applies.

To determine if an errata sheet exists for a particular device, please check with one of the following:

- Microchip's Worldwide Web site; http://www.microchip.com
- Your local Microchip sales office (see last page)

When contacting a sales office, please specify which device, revision of silicon and data sheet (include literature number) you are using.

Customer Notification System

Register on our web site at **www.microchip.com** to receive the most current information on all of our products.

 © 2007 Microchip Technology Inc.

查询"DSPIC33FJ12MC02ESP"供应商

1.0 DEVICE OVERVIEW

Note:	This data sheet summarizes the features of the dsPIC33FJ12MC201/202 devices. It is not intended to be a comprehensive reference source. To complement the information in this data sheet, refer to the *"dsPIC33F Family Reference Manual"*. Please see the Microchip web site (www.microchip.com) for the latest dsPIC33F Family Reference Manual chapters.

This document contains device specific information for the dsPIC33FJ12MC201/202 Digital Signal Controller (DSC) Devices. The dsPIC33F devices contain extensive Digital Signal Processor (DSP) functionality with a high performance 16-bit microcontroller (MCU) architecture.

Figure 1-1 shows a general block diagram of the core and peripheral modules in the dsPIC33FJ12MC201/202 family of devices. Table 1-1 lists the functions of the various pins shown in the pinout diagrams.

查询"DSPIC33FJ12MC02ESP"供应商

FIGURE 1-1: dsPIC33FJ12MC201/202 BLOCK DIAGRAM

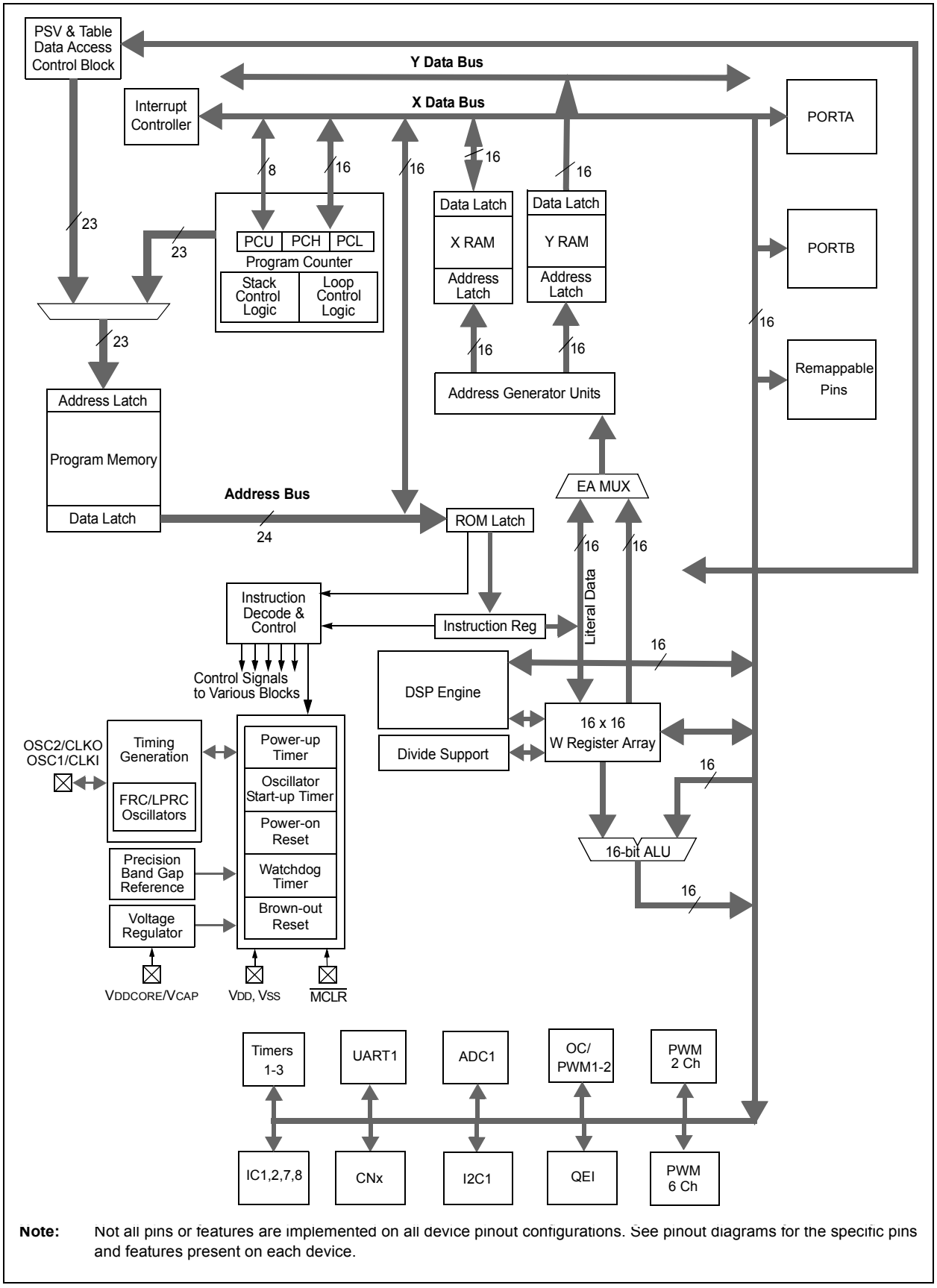

Note: Not all pins or features are implemented on all device pinout configurations. See pinout diagrams for the specific pins and features present on each device.

 © 2007 Microchip Technology Inc.

查询"DSPIC33FJ12MC02ESP"供应商

TABLE 1-1: PINOUT I/O DESCRIPTIONS

Pin Name	Pin Type	Buffer Type	Description
AN0-AN5	I	Analog	Analog input channels.
CLKI CLKO	I O	ST/CMOS —	External clock source input. Always associated with OSC1 pin function. Oscillator crystal output. Connects to crystal or resonator in Crystal Oscillator mode. Optionally functions as CLKO in RC and EC modes. Always associated with OSC2 pin function.
OSC1 OSC2	I I/O	ST/CMOS —	Oscillator crystal input. ST buffer when configured in RC mode; CMOS otherwise. Oscillator crystal output. Connects to crystal or resonator in Crystal Oscillator mode. Optionally functions as CLKO in RC and EC modes.
SOSCI SOSCO	I O	ST/CMOS —	32.768 kHz low-power oscillator crystal input; CMOS otherwise. 32.768 kHz low-power oscillator crystal output.
CN0-CN7 CN11-CN16 CN21-CN24 CN27 CN29-CN30	I	ST	Change notification inputs. Can be software programmed for internal weak pull-ups on all inputs.
IC0-IC1 IC7-IC8	I I	ST ST	Capture inputs 1/2 Capture inputs 7/8.
OCFA OC1-OC2	I O	ST —	Compare Fault A input (for Compare Channels 1 and 2). Compare outputs 1 through 2.
INT0 INT1 INT2	I I I	ST ST ST	External interrupt 0. External interrupt 1. External interrupt 2.
RA0-RA4	I/O	ST	PORTA is a bidirectional I/O port.
RB0-RB15	I/O	ST	PORTB is a bidirectional I/O port.
T1CK T2CK T3CK	I I I	ST ST ST	Timer1 external clock input. Timer2 external clock input. Timer3 external clock input.
$\overline{\text{U1CTS}}$ $\overline{\text{U1RTS}}$ U1RX U1TX	I O I O	ST — ST —	UART1 clear to send. UART1 ready to send. UART1 receive. UART1 transmit.
SCK1 SDI1 SDO1 $\overline{\text{SS1}}$	I/O I O I/O	ST ST — ST	Synchronous serial clock input/output for SPI1. SPI1 data in. SPI1 data out. SPI1 slave synchronization or frame pulse I/O.
SCL1 SDA1 ASCL1 ASDA1	I/O I/O I/O I/O	ST ST ST ST	Synchronous serial clock input/output for I2C1. Synchronous serial data input/output for I2C1. Alternate synchronous serial clock input/output for I2C1. Alternate synchronous serial data input/output for I2C1.
TMS TCK TDI TDO	I I I O	ST ST ST —	JTAG Test mode select pin. JTAG test clock input pin. JTAG test data input pin. JTAG test data output pin.
INDX QEA QEB UPDN	I I I O	ST ST ST CMOS	Quadrature Encoder Index Pulse input. Quadrature Encoder Phase A input in QEI mode. Auxiliary Timer External Clock/Gate input in Timer mode. Quadrature Encoder Phase A input in QEI mode. Auxiliary Timer External Clock/Gate input in Timer mode. Position Up/Down Counter Direction State.

Legend: CMOS = CMOS compatible input or output; ST = Schmitt Trigger input with CMOS levels; Analog = Analog input; O = Output; P=Power; I = Input

查询"DSPIC33FJ12MC02ESP"供应商

TABLE 1-1: PINOUT I/O DESCRIPTIONS (CONTINUED)

Pin Name	Pin Type	Buffer Type	Description
$\overline{\text{FLTA1}}$	I	ST	PWM1 Fault A input.
PWM1L1	O	—	PWM1 Low output 1
PWM1H1	O	—	PWM1 High output 1
PWM1L2	O	—	PWM1 Low output 2
PWM1H2	O	—	PWM1 High output 2
PWM1L3	O	—	PWM1 Low output 3
PWM1H3	O	—	PWM1 High output 3
$\overline{\text{FLTA2}}$	I	ST	PWM2 Fault A input.
PWM2L1	O	—	PWM2 Low output 1
PWM2H1	O	—	PWM2 High output 1
PGD1/EMUD1	I/O	ST	Data I/O pin for programming/debugging communication channel 1.
PGC1/EMUC1	I	ST	Clock input pin for programming/debugging communication channel 1.
PGD2/EMUD2	I/O	ST	Data I/O pin for programming/debugging communication channel 2.
PGC2/EMUC2	I	ST	Clock input pin for programming/debugging communication channel 2.
PGD3/EMUD3	I/O	ST	Data I/O pin for programming/debugging communication channel 3.
PGC3/EMUC3	I	ST	Clock input pin for programming/debugging communication channel 3.
$\overline{\text{MCLR}}$	I/P	ST	Master Clear (Reset) input. This pin is an active-low Reset to the device.
AVDD	P	P	Positive supply for analog modules.
AVSS	P	P	Ground reference for analog modules.
VDD	P	—	Positive supply for peripheral logic and I/O pins.
VDDCORE	P	—	CPU logic filter capacitor connection.
VSS	P	—	Ground reference for logic and I/O pins.
VREF+	I	Analog	Analog voltage reference (high) input.
VREF-	I	Analog	Analog voltage reference (low) input.

Legend: CMOS = CMOS compatible input or output; Analog = Analog input; P=Power; ST = Schmitt Trigger input with CMOS levels; O = Output; I = Input

 © 2007 Microchip Technology Inc.

查询"DSPIC33FJ12MC02ESP"供应商

2.0 CPU

Note:	This data sheet summarizes the features of the dsPIC33FJ12MC201/202 devices. It is not intended to be a comprehensive reference source. To complement the information in this data sheet, refer to the *"dsPIC33F Family Reference Manual"*. Please see the Microchip web site (www.microchip.com) for the latest dsPIC33F Family Reference Manual chapters.

The dsPIC33FJ12MC201/202 CPU module has a 16-bit (data) modified Harvard architecture with an enhanced instruction set, including significant support for DSP. The CPU has a 24-bit instruction word with a variable length opcode field. The Program Counter (PC) is 23 bits wide and addresses up to 4M x 24 bits of user program memory space. The actual amount of program memory implemented varies by device. A single-cycle instruction prefetch mechanism is used to help maintain throughput and provides predictable execution. All instructions execute in a single cycle, with the exception of instructions that change the program flow, the double-word move (`MOV.D`) instruction and the table instructions. Overhead-free program loop constructs are supported using the `DO` and `REPEAT` instructions, both of which are interruptible at any point.

The dsPIC33FJ12MC201/202 devices have sixteen, 16-bit working registers in the programmer's model. Each of the working registers can serve as a data, address or address offset register. The 16th working register (W15) operates as a software Stack Pointer (SP) for interrupts and calls.

There are two classes of instruction in the dsPIC33FJ12MC201/202 devices: MCU and DSP. These two instruction classes are seamlessly integrated into a single CPU. The instruction set includes many addressing modes and is designed for optimum C compiler efficiency. For most instructions, the dsPIC33FJ12MC201/202 is capable of executing a data (or program data) memory read, a working register (data) read, a data memory write and a program (instruction) memory read per instruction cycle. As a result, three parameter instructions can be supported, allowing A + B = C operations to be executed in a single cycle.

A block diagram of the CPU is shown in Figure 2-1, and the programmer's model for the dsPIC33FJ12MC201/202 is shown in Figure 2-2.

2.1 Data Addressing Overview

The data space can be addressed as 32K words or 64 Kbytes and is split into two blocks, referred to as X and Y data memory. Each memory block has its own independent Address Generation Unit (AGU). The MCU class of instructions operates solely through the X memory AGU, which accesses the entire memory map as one linear data space. Certain DSP instructions operate through the X and Y AGUs to support dual operand reads, which splits the data address space into two parts. The X and Y data space boundary is device-specific.

Overhead-free circular buffers (Modulo Addressing mode) are supported in both X and Y address spaces. The Modulo Addressing removes the software boundary checking overhead for DSP algorithms. Furthermore, the X AGU circular addressing can be used with any of the MCU class of instructions. The X AGU also supports Bit-Reversed Addressing to greatly simplify input or output data reordering for radix-2 FFT algorithms.

The upper 32 Kbytes of the data space memory map can optionally be mapped into program space at any 16K program word boundary defined by the 8-bit Program Space Visibility Page (PSVPAG) register. The program-to-data-space mapping feature lets any instruction access program space as if it were data space.

2.2 DSP Engine Overview

The DSP engine features a high-speed 17-bit by 17-bit multiplier, a 40-bit ALU, two 40-bit saturating accumulators and a 40-bit bidirectional barrel shifter. The barrel shifter is capable of shifting a 40-bit value up to 16 bits right or left, in a single cycle. The DSP instructions operate seamlessly with all other instructions and have been designed for optimal real-time performance. The `MAC` instruction and other associated instructions can concurrently fetch two data operands from memory while multiplying two W registers and accumulating and optionally saturating the result in the same cycle. This instruction functionality requires that the RAM data space be split for these instructions and linear for all others. Data space partitioning is achieved in a transparent and flexible manner through dedicating certain working registers to each address space.

查询"DSPIC33FJ12MC02ESP"供应商

2.3 Special MCU Features

The dsPIC33FJ12MC201/202 features a 17-bit by 17-bit single-cycle multiplier that is shared by both the MCU ALU and DSP engine. The multiplier can perform signed, unsigned and mixed-sign multiplication. Using a 17-bit by 17-bit multiplier for 16-bit by 16-bit multiplication not only allows you to perform mixed-sign multiplication, it also achieves accurate results for special operations, such as (-1.0) x (-1.0).

The dsPIC33FJ12MC201/202 supports 16/16 and 32/16 divide operations, both fractional and integer. All divide instructions are iterative operations. They must be executed within a `REPEAT` loop, resulting in a total execution time of 19 instruction cycles. The divide operation can be interrupted during any of those 19 cycles without loss of data.

A 40-bit barrel shifter is used to perform up to a 16-bit left or right shift in a single cycle. The barrel shifter can be used by both MCU and DSP instructions.

FIGURE 2-1: dsPIC33FJ12MC201/202 CPU CORE BLOCK DIAGRAM

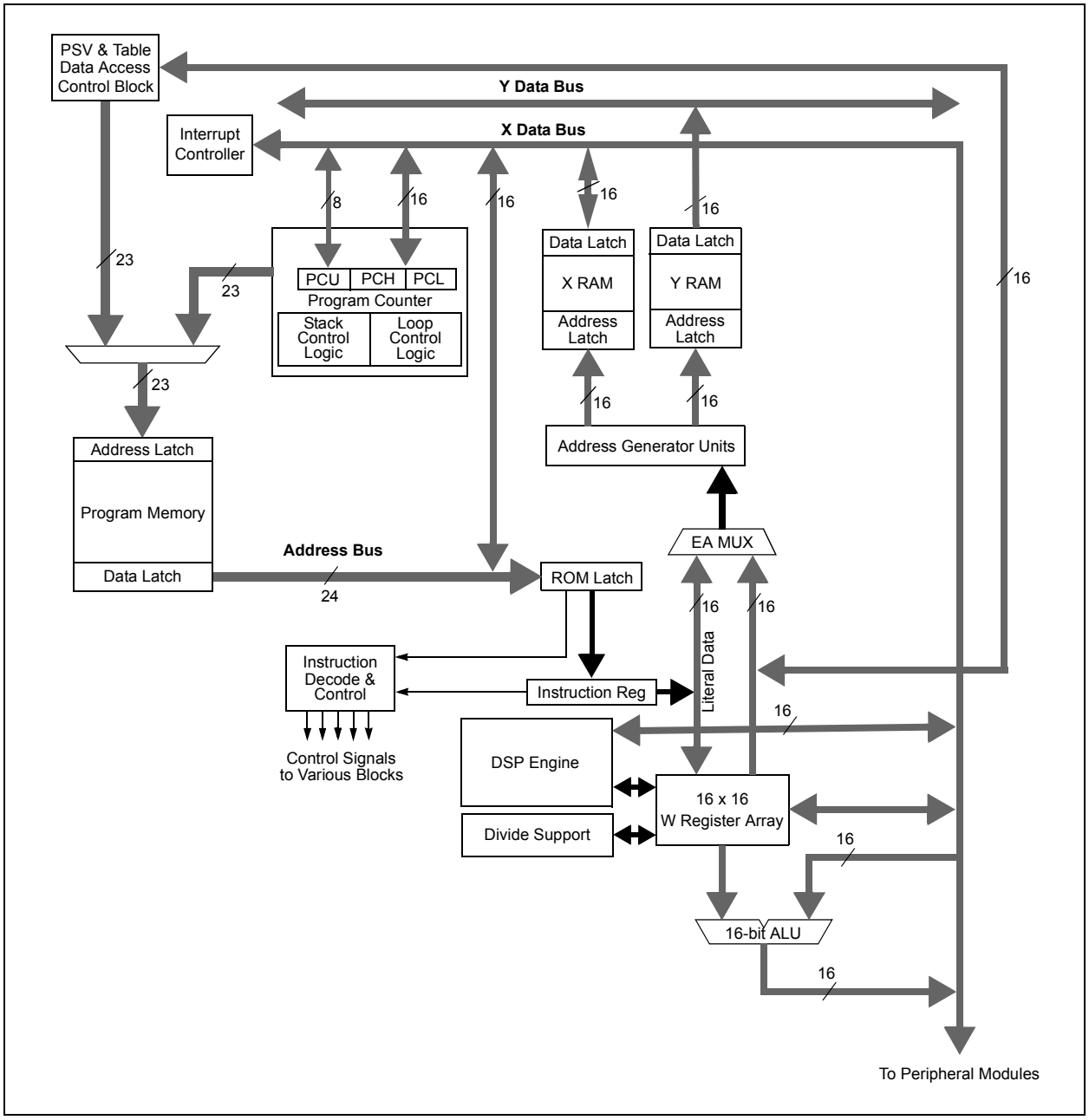

 © 2007 Microchip Technology Inc.

查询"DSPIC33FJ12MC02ESP"供应商

FIGURE 2-2: dsPIC33FJ12MC201/202 PROGRAMMER'S MODEL

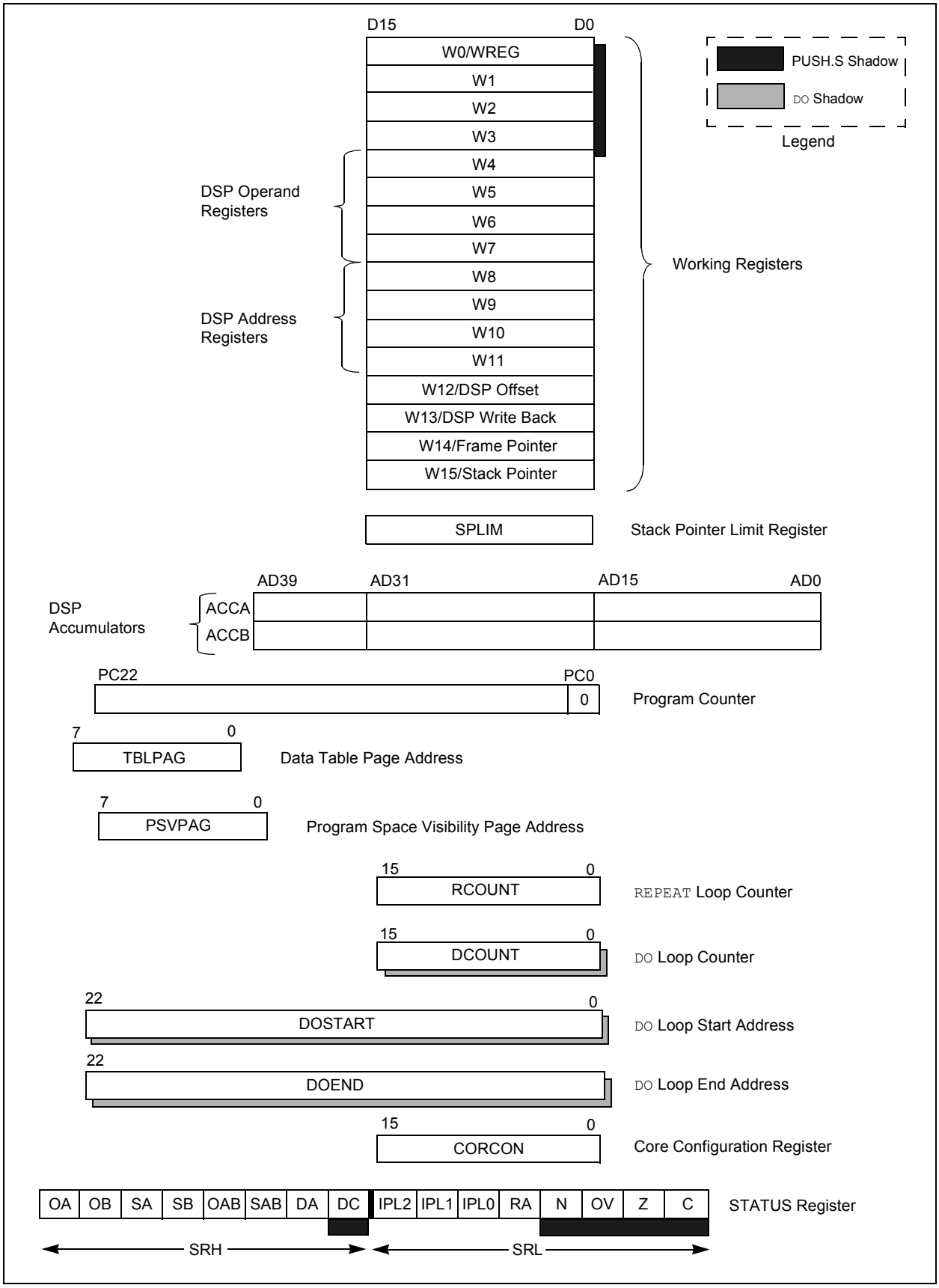

查询"DSPIC33FJ12MC02ESP"供应商

2.4 CPU Control Registers

REGISTER 2-1: SR: CPU STATUS REGISTER

R-0	R-0	R/C-0	R/C-0	R-0	R/C-0	R -0	R/W-0
OA	OB	SA(1)	SB(1)	OAB	SAB	DA	DC
bit 15							bit 8

R/W-0(2)	R/W-0(3)	R/W-0(3)	R-0	R/W-0	R/W-0	R/W-0	R/W-0
IPL<2:0>(2)			RA	N	OV	Z	C
bit 7							bit 0

Legend:		
C = Clear only bit	R = Readable bit	U = Unimplemented bit, read as ‘0’
S = Set only bit	W = Writable bit	-n = Value at POR
‘1’ = Bit is set	‘0’ = Bit is cleared	x = Bit is unknown

bit 15 **OA:** Accumulator A Overflow Status bit
1 = Accumulator A overflowed
0 = Accumulator A has not overflowed

bit 14 **OB:** Accumulator B Overflow Status bit
1 = Accumulator B overflowed
0 = Accumulator B has not overflowed

bit 13 **SA:** Accumulator A Saturation ‘Sticky’ Status bit(1)
1 = Accumulator A is saturated or has been saturated at some time
0 = Accumulator A is not saturated

bit 12 **SB:** Accumulator B Saturation ‘Sticky’ Status bit(1)
1 = Accumulator B is saturated or has been saturated at some time
0 = Accumulator B is not saturated

bit 11 **OAB:** OA || OB Combined Accumulator Overflow Status bit
1 = Accumulators A or B have overflowed
0 = Neither Accumulators A or B have overflowed

bit 10 **SAB:** SA || SB Combined Accumulator ‘Sticky’ Status bit
1 = Accumulators A or B are saturated or have been saturated at some time in the past
0 = Neither Accumulator A or B are saturated

Note: This bit may be read or cleared (not set). Clearing this bit will clear SA and SB.

bit 9 **DA:** DO Loop Active bit
1 = DO loop in progress
0 = DO loop not in progress

bit 8 **DC:** MCU ALU Half Carry/$\overline{\text{Borrow}}$ bit
1 = A carry-out from the 4th low-order bit (for byte-sized data) or 8th low-order bit (for word-sized data) of the result occurred
0 = No carry-out from the 4th low-order bit (for byte-sized data) or 8th low-order bit (for word-sized data) of the result occurred

Note 1: This bit can be read or cleared (not set).
2: The IPL<2:0> bits are concatenated with the IPL<3> bit (CORCON<3>) to form the CPU Interrupt Priority Level. The value in parentheses indicates the IPL if IPL<3> = 1. User interrupts are disabled when IPL<3> = 1.
3: The IPL<2:0> Status bits are read only when NSTDIS = 1 (INTCON1<15>).

 © 2007 Microchip Technology Inc.

查询"DSPIC33FJ12MC02ESP"供应商

REGISTER 2-1: SR: CPU STATUS REGISTER (CONTINUED)

bit 7-5 **IPL<2:0>:** CPU Interrupt Priority Level Status bits(2)
111 = CPU Interrupt Priority Level is 7 (15), user interrupts disabled
110 = CPU Interrupt Priority Level is 6 (14)
101 = CPU Interrupt Priority Level is 5 (13)
100 = CPU Interrupt Priority Level is 4 (12)
011 = CPU Interrupt Priority Level is 3 (11)
010 = CPU Interrupt Priority Level is 2 (10)
001 = CPU Interrupt Priority Level is 1 (9)
000 = CPU Interrupt Priority Level is 0 (8)

bit 4 **RA:** REPEAT Loop Active bit
1 = REPEAT loop in progress
0 = REPEAT loop not in progress

bit 3 **N:** MCU ALU Negative bit
1 = Result was negative
0 = Result was non-negative (zero or positive)

bit 2 **OV:** MCU ALU Overflow bit
This bit is used for signed arithmetic (2's complement). It indicates an overflow of a magnitude that causes the sign bit to change state.
1 = Overflow occurred for signed arithmetic (in this arithmetic operation)
0 = No overflow occurred

bit 1 **Z:** MCU ALU Zero bit
1 = An operation that affects the Z bit has set it at some time in the past
0 = The most recent operation that affects the Z bit has cleared it (i.e., a non-zero result)

bit 0 **C:** MCU ALU Carry/$\overline{\text{Borrow}}$ bit
1 = A carry-out from the Most Significant bit of the result occurred
0 = No carry-out from the Most Significant bit of the result occurred

Note 1: This bit can be read or cleared (not set).
2: The IPL<2:0> bits are concatenated with the IPL<3> bit (CORCON<3>) to form the CPU Interrupt Priority Level. The value in parentheses indicates the IPL if IPL<3> = 1. User interrupts are disabled when IPL<3> = 1.
3: The IPL<2:0> Status bits are read only when NSTDIS = 1 (INTCON1<15>).

查询"DSPIC33FJ12MC02ESP"供应商

REGISTER 2-2: CORCON: CORE CONTROL REGISTER

U-0	U-0	U-0	R/W-0	R/W-0	R-0	R-0	R-0
—	—	—	US	EDT(1)	DL<2:0>		
bit 15							bit 8

R/W-0	R/W-0	R/W-1	R/W-0	R/C-0	R/W-0	R/W-0	R/W-0
SATA	SATB	SATDW	ACCSAT	IPL3(2)	PSV	RND	IF
bit 7							bit 0

Legend:	C = Clear only bit		
R = Readable bit	W = Writable bit	-n = Value at POR	‘1’ = Bit is set
0’ = Bit is cleared	‘x = Bit is unknown	U = Unimplemented bit, read as ‘0’	

bit 15-13 **Unimplemented:** Read as ‘0’

bit 12 **US:** DSP Multiply Unsigned/Signed Control bit
1 = DSP engine multiplies are unsigned
0 = DSP engine multiplies are signed

bit 11 **EDT:** Early DO Loop Termination Control bit(1)
1 = Terminate executing DO loop at end of current loop iteration
0 = No effect

bit 10-8 **DL<2:0>:** DO Loop Nesting Level Status bits
111 = 7 DO loops active
•
•
•
001 = 1 DO loop active
000 = 0 DO loops active

bit 7 **SATA:** ACCA Saturation Enable bit
1 = Accumulator A saturation enabled
0 = Accumulator A saturation disabled

bit 6 **SATB:** ACCB Saturation Enable bit
1 = Accumulator B saturation enabled
0 = Accumulator B saturation disabled

bit 5 **SATDW:** Data Space Write from DSP Engine Saturation Enable bit
1 = Data space write saturation enabled
0 = Data space write saturation disabled

bit 4 **ACCSAT:** Accumulator Saturation Mode Select bit
1 = 9.31 saturation (super saturation)
0 = 1.31 saturation (normal saturation)

bit 3 **IPL3:** CPU Interrupt Priority Level Status bit 3(2)
1 = CPU interrupt priority level is greater than 7
0 = CPU interrupt priority level is 7 or less

bit 2 **PSV:** Program Space Visibility in Data Space Enable bit
1 = Program space visible in data space
0 = Program space not visible in data space

Note 1: This bit will always read as ‘0’.
2: The IPL3 bit is concatenated with the IPL<2:0> bits (SR<7:5>) to form the CPU interrupt priority level.

 © 2007 Microchip Technology Inc.

查询"DSPIC33FJ12MC02ESP"供应商

REGISTER 2-2: CORCON: CORE CONTROL REGISTER (CONTINUED)

bit 1 **RND:** Rounding Mode Select bit
1 = Biased (conventional) rounding enabled
0 = Unbiased (convergent) rounding enabled

bit 0 **IF:** Integer or Fractional Multiplier Mode Select bit
1 = Integer mode enabled for DSP multiply ops
0 = Fractional mode enabled for DSP multiply ops

Note 1: This bit will always read as '0'.
2: The IPL3 bit is concatenated with the IPL<2:0> bits (SR<7:5>) to form the CPU interrupt priority level.

查询"DSPIC33FJ12MC02ESP"供应商

2.5 Arithmetic Logic Unit (ALU)

The dsPIC33FJ12MC201/202 ALU is 16 bits wide and is capable of addition, subtraction, bit shifts and logic operations. Unless otherwise mentioned, arithmetic operations are 2's complement in nature. Depending on the operation, the ALU can affect the values of the Carry (C), Zero (Z), Negative (N), Overflow (OV) and Digit Carry (DC) Status bits in the SR register. The C and DC Status bits operate as Borrow and Digit Borrow bits, respectively, for subtraction operations.

The ALU can perform 8-bit or 16-bit operations, depending on the mode of the instruction that is used. Data for the ALU operation can come from the W register array or data memory, depending on the addressing mode of the instruction. Likewise, output data from the ALU can be written to the W register array or a data memory location.

Refer to the "*dsPIC30F/33F Programmer's Reference Manual*" (DS70157) for information on the SR bits affected by each instruction.

The dsPIC33FJ12MC201/202 CPU incorporates hardware support for both multiplication and division. This includes a dedicated hardware multiplier and support hardware for 16-bit-divisor division.

2.5.1 MULTIPLIER

Using the high-speed 17-bit x 17-bit multiplier of the DSP engine, the ALU supports unsigned, signed or mixed-sign operation in several MCU multiplication modes:

- 16-bit x 16-bit signed
- 16-bit x 16-bit unsigned
- 16-bit signed x 5-bit (literal) unsigned
- 16-bit unsigned x 16-bit unsigned
- 16-bit unsigned x 5-bit (literal) unsigned
- 16-bit unsigned x 16-bit signed
- 8-bit unsigned x 8-bit unsigned

2.5.2 DIVIDER

The divide block supports 32-bit/16-bit and 16-bit/16-bit signed and unsigned integer divide operations with the following data sizes:

1. 32-bit signed/16-bit signed divide
2. 32-bit unsigned/16-bit unsigned divide
3. 16-bit signed/16-bit signed divide
4. 16-bit unsigned/16-bit unsigned divide

The quotient for all divide instructions ends up in W0 and the remainder in W1. 16-bit signed and unsigned `DIV` instructions can specify any W register for both the 16-bit divisor (Wn) and any W register (aligned) pair (W(m + 1):Wm) for the 32-bit dividend. The divide algorithm takes one cycle per bit of divisor, so both 32-bit/16-bit and 16-bit/16-bit instructions take the same number of cycles to execute.

2.6 DSP Engine

The DSP engine consists of a high-speed 17-bit x 17-bit multiplier, a barrel shifter and a 40-bit adder/subtracter (with two target accumulators, round and saturation logic).

The dsPIC33FJ12MC201/202 is a single-cycle instruction flow architecture; therefore, concurrent operation of the DSP engine with MCU instruction flow is not possible. However, some MCU ALU and DSP engine resources can be used concurrently by the same instruction (e.g., ED, EDAC).

The DSP engine can also perform inherent accumulator-to-accumulator operations that require no additional data. These instructions are `ADD`, `SUB` and `NEG`.

The DSP engine has options selected through bits in the CPU Core Control register (CORCON), as listed below:

- Fractional or integer DSP multiply (IF)
- Signed or unsigned DSP multiply (US)
- Conventional or convergent rounding (RND)
- Automatic saturation on/off for ACCA (SATA)
- Automatic saturation on/off for ACCB (SATB)
- Automatic saturation on/off for writes to data memory (SATDW)
- Accumulator Saturation mode selection (ACCSAT)

A block diagram of the DSP engine is shown in Figure 2-3.

TABLE 2-1: DSP INSTRUCTIONS SUMMARY

Instruction	Algebraic Operation	ACC Write Back
CLR	$A = 0$	Yes
ED	$A = (x - y)2$	No
EDAC	$A = A + (x - y)2$	No
MAC	$A = A + (x * y)$	Yes
MAC	$A = A + x2$	No
MOVSAC	No change in A	Yes
MPY	$A = x * y$	No
MPY	$A = x\ 2$	No
MPY.N	$A = -x * y$	No
MSC	$A = A - x * y$	Yes

 © 2007 Microchip Technology Inc.

查询"DSPIC33FJ12MC02ESP"供应商

FIGURE 2-3: DSP ENGINE BLOCK DIAGRAM

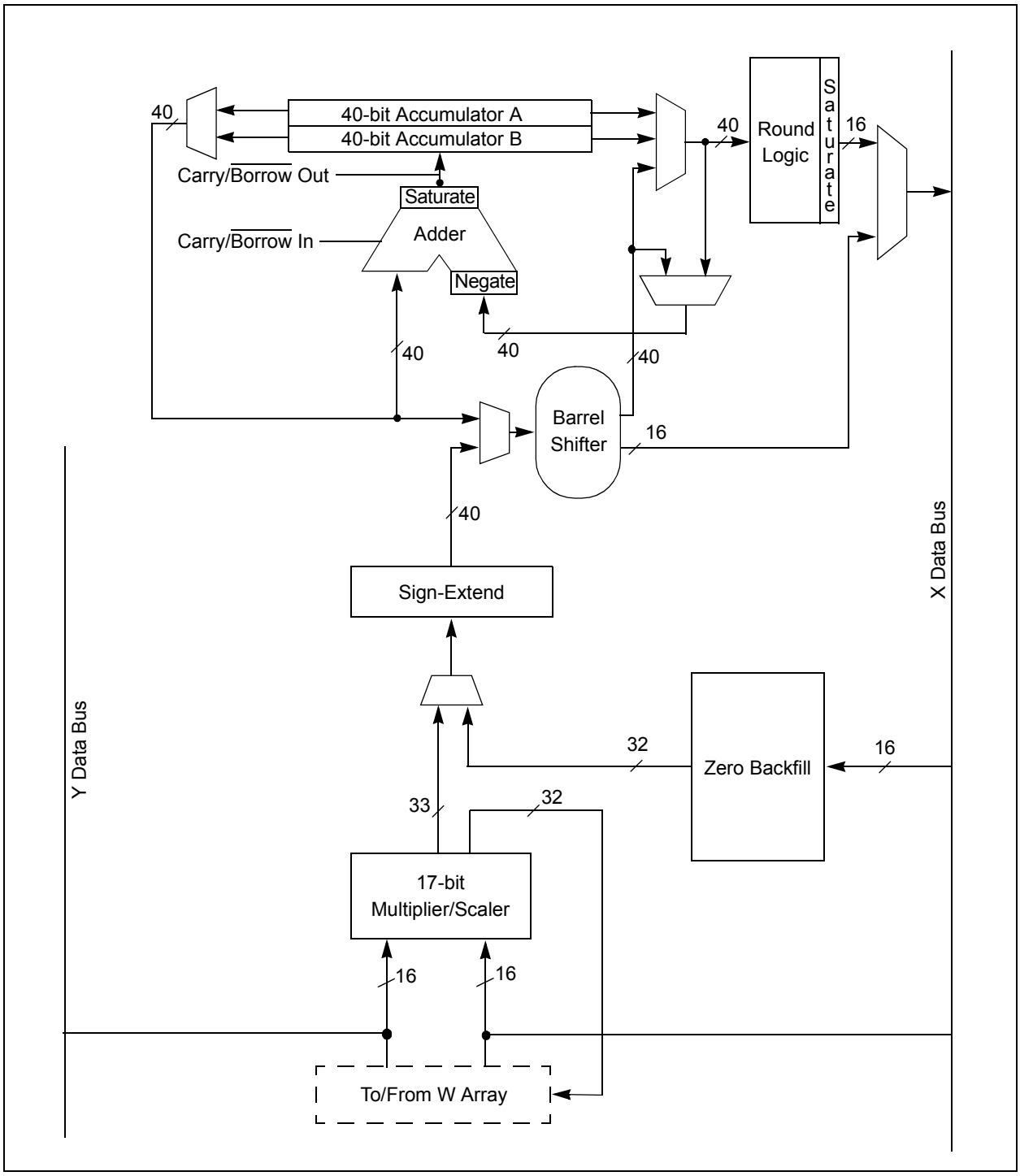

查询"DSPIC33FJ12MC02ESP"供应商

2.6.1 MULTIPLIER

The 17-bit x 17-bit multiplier is capable of signed or unsigned operation and can multiplex its output using a scaler to support either 1.31 fractional (Q31) or 32-bit integer results. Unsigned operands are zero-extended into the 17th bit of the multiplier input value. Signed operands are sign-extended into the 17th bit of the multiplier input value. The output of the 17-bit x 17-bit multiplier/scaler is a 33-bit value that is sign-extended to 40 bits. Integer data is inherently represented as a signed 2's complement value, where the Most Significant bit (MSb) is defined as a sign bit. The range of an N-bit 2's complement integer is -2^{N-1} to $2^{N-1} - 1$.

- For a 16-bit integer, the data range is -32768 (0x8000) to 32767 (0x7FFF) including 0.
- For a 32-bit integer, the data range is -2,147,483,648 (0x8000 0000) to 2,147,483,647 (0x7FFF FFFF).

When the multiplier is configured for fractional multiplication, the data is represented as a 2's complement fraction, where the MSb is defined as a sign bit and the radix point is implied to lie just after the sign bit (QX format). The range of an N-bit 2's complement fraction with this implied radix point is -1.0 to $(1 - 2^{1-N})$. For a 16-bit fraction, the Q15 data range is -1.0 (0x8000) to 0.999969482 (0x7FFF) including 0 and has a precision of 3.01518×10^{-5}. In Fractional mode, the 16 x 16 multiply operation generates a 1.31 product that has a precision of 4.65661×10^{-10}.

The same multiplier is used to support the MCU multiply instructions, which include integer 16-bit signed, unsigned and mixed sign multiply operations.

The `MUL` instruction can be directed to use byte or word-sized operands. Byte operands will direct a 16-bit result, and word operands will direct a 32-bit result to the specified register(s) in the W array.

2.6.2 DATA ACCUMULATORS AND ADDER/SUBTRACTER

The data accumulator consists of a 40-bit adder/subtracter with automatic sign extension logic. It can select one of two accumulators (A or B) as its pre-accumulation source and post-accumulation destination. For the `ADD` and `LAC` instructions, the data to be accumulated or loaded can be optionally scaled using the barrel shifter prior to accumulation.

2.6.2.1 Adder/Subtracter, Overflow and Saturation

The adder/subtracter is a 40-bit adder with an optional zero input into one side, and either true or complement data into the other input.

- In the case of addition, the Carry/$\overline{\text{Borrow}}$ input is active-high and the other input is true data (not complemented).
- In the case of subtraction, the Carry/$\overline{\text{Borrow}}$ input is active-low and the other input is complemented.

The adder/subtracter generates Overflow Status bits, SA/SB and OA/OB, which are latched and reflected in the STATUS register:

- Overflow from bit 39: this is a catastrophic overflow in which the sign of the accumulator is destroyed.
- Overflow into guard bits 32 through 39: this is a recoverable overflow. This bit is set whenever all the guard bits are not identical to each other.

The adder has an additional saturation block that controls accumulator data saturation, if selected. It uses the result of the adder, the Overflow Status bits described previously and the SAT<A:B> (CORCON<7:6>) and ACCSAT (CORCON<4>) mode control bits to determine when and to what value to saturate.

Six STATUS register bits support saturation and overflow:

- OA: ACCA overflowed into guard bits
- OB: ACCB overflowed into guard bits
- SA: ACCA saturated (bit 31 overflow and saturation)
  or
  ACCA overflowed into guard bits and saturated (bit 39 overflow and saturation)
- SB: ACCB saturated (bit 31 overflow and saturation)
  or
  ACCB overflowed into guard bits and saturated (bit 39 overflow and saturation)
- OAB: Logical OR of OA and OB
- SAB: Logical OR of SA and SB

The OA and OB bits are modified each time data passes through the adder/subtracter. When set, they indicate that the most recent operation has overflowed into the accumulator guard bits (bits 32 through 39). The OA and OB bits can also optionally generate an arithmetic warning trap when set and the corresponding Overflow Trap Flag Enable bits (OVATE, OVBTE) in the INTCON1 register are set (refer to **Section 6.0 "Interrupt Controller"**). This allows the user application to take immediate action, for example, to correct system gain.

 © 2007 Microchip Technology Inc.

查询"DSPIC33FJ12MC02ESP"供应商

The SA and SB bits are modified each time data passes through the adder/subtracter, but can only be cleared by the user application. When set, they indicate that the accumulator has overflowed its maximum range (bit 31 for 32-bit saturation or bit 39 for 40-bit saturation) and will be saturated (if saturation is enabled). When saturation is not enabled, SA and SB default to bit 39 overflow and thus indicate that a catastrophic overflow has occurred. If the COVTE bit in the INTCON1 register is set, SA and SB bits will generate an arithmetic warning trap when saturation is disabled.

The Overflow and Saturation Status bits can optionally be viewed in the STATUS Register (SR) as the logical OR of OA and OB (in bit OAB) and the logical OR of SA and SB (in bit SAB). Programmers can check one bit in the STATUS register to determine if either accumulator has overflowed, or one bit to determine if either accumulator has saturated. This is useful for complex number arithmetic, which typically uses both accumulators.

The device supports three Saturation and Overflow modes:

- Bit 39 Overflow and Saturation:
  When bit 39 overflow and saturation occurs, the saturation logic loads the maximally positive 9.31 (0x7FFFFFFFFF) or maximally negative 9.31 value (0x8000000000) into the target accumulator. The SA or SB bit is set and remains set until cleared by the user application. This condition is referred to as 'super saturation' and provides protection against erroneous data or unexpected algorithm problems (such as gain calculations).
- Bit 31 Overflow and Saturation:
  When bit 31 overflow and saturation occurs, the saturation logic then loads the maximally positive 1.31 value (0x007FFFFFFF) or maximally negative 1.31 value (0x0080000000) into the target accumulator. The SA or SB bit is set and remains set until cleared by the user application. When this Saturation mode is in effect, the guard bits are not used, so the OA, OB or OAB bits are never set.
- Bit 39 Catastrophic Overflow:
  The bit 39 Overflow Status bit from the adder is used to set the SA or SB bit, which remains set until cleared by the user application. No saturation operation is performed, and the accumulator is allowed to overflow, destroying its sign. If the COVTE bit in the INTCON1 register is set, a catastrophic overflow can initiate a trap exception.

2.6.3 ACCUMULATOR 'WRITE BACK'

The `MAC` class of instructions (with the exception of `MPY`, `MPY.N`, `ED` and `EDAC`) can optionally write a rounded version of the high word (bits 31 through 16) of the accumulator that is not targeted by the instruction into data space memory. The write is performed across the X bus into combined X and Y address space. The following addressing modes are supported:

- W13, Register Direct:
  The rounded contents of the non-target accumulator are written into W13 as a 1.15 fraction.
- [W13] + = 2, Register Indirect with Post-Increment:
  The rounded contents of the non-target accumulator are written into the address pointed to by W13 as a 1.15 fraction. W13 is then incremented by 2 (for a word write).

2.6.3.1 Round Logic

The round logic is a combinational block that performs a conventional (biased) or convergent (unbiased) round function during an accumulator write (store). The Round mode is determined by the state of the RND bit in the CORCON register. It generates a 16-bit, 1.15 data value that is passed to the data space write saturation logic. If rounding is not indicated by the instruction, a truncated 1.15 data value is stored and the least significant word is simply discarded.

Conventional rounding zero-extends bit 15 of the accumulator and adds it to the ACCxH word (bits 16 through 31 of the accumulator).

- If the ACCxL word (bits 0 through 15 of the accumulator) is between 0x8000 and 0xFFFF (0x8000 included), ACCxH is incremented.
- If ACCxL is between 0x0000 and 0x7FFF, ACCxH is left unchanged.

A consequence of this algorithm is that over a succession of random rounding operations, the value tends to be biased slightly positive.

Convergent (or unbiased) rounding operates in the same manner as conventional rounding, except when ACCxL equals 0x8000. In this case, the Least Significant bit (bit 16 of the accumulator) of ACCxH is examined:

- If it is '`1`', ACCxH is incremented.
- If it is '`0`', ACCxH is not modified.

Assuming that bit 16 is effectively random in nature, this scheme removes any rounding bias that may accumulate.

The `SAC` and `SAC.R` instructions store either a truncated (`SAC`), or rounded (`SAC.R`) version of the contents of the target accumulator to data memory via the X bus, subject to data saturation (see **Section 2.6.3.2 "Data Space Write Saturation"**). For the `MAC` class of instructions, the accumulator write-back operation functions in the same manner, addressing combined MCU (X and Y) data space though the X bus. For this class of instructions, the data is always subject to rounding.

查询"DSPIC33FJ12MC02ESP"供应商

2.6.3.2 Data Space Write Saturation

In addition to adder/subtracter saturation, writes to data space can also be saturated, but without affecting the contents of the source accumulator. The data space write saturation logic block accepts a 16-bit, 1.15 fractional value from the round logic block as its input, together with overflow status from the original source (accumulator) and the 16-bit round adder. These inputs are combined and used to select the appropriate 1.15 fractional value as output to write to data space memory.

If the SATDW bit in the CORCON register is set, data (after rounding or truncation) is tested for overflow and adjusted accordingly:

- For input data greater than 0x007FFF, data written to memory is forced to the maximum positive 1.15 value, 0x7FFF.
- For input data less than 0xFF8000, data written to memory is forced to the maximum negative 1.15 value, 0x8000.

The Most Significant bit of the source (bit 39) is used to determine the sign of the operand being tested.

If the SATDW bit in the CORCON register is not set, the input data is always passed through unmodified under all conditions.

2.6.4 BARREL SHIFTER

The barrel shifter can perform up to 16-bit arithmetic or logic right shifts, or up to 16-bit left shifts in a single cycle. The source can be either of the two DSP accumulators or the X bus (to support multi-bit shifts of register or memory data).

The shifter requires a signed binary value to determine both the magnitude (number of bits) and direction of the shift operation. A positive value shifts the operand right. A negative value shifts the operand left. A value of ‘0’ does not modify the operand.

The barrel shifter is 40 bits wide, thereby obtaining a 40-bit result for DSP shift operations and a 16-bit result for MCU shift operations. Data from the X bus is presented to the barrel shifter between bit positions 16 and 31 for right shifts, and between bit positions 0 and 16 for left shifts.

 © 2007 Microchip Technology Inc.

查询"DSPIC33FJ12MC02ESP"供应商

3.0 MEMORY ORGANIZATION

Note:	This data sheet summarizes the features of the dsPIC33FJ12MC201/202 devices. It is not intended to be a comprehensive reference source. To complement the information in this data sheet, refer to the *"dsPIC33F Family Reference Manual"*. Please see the Microchip web site (www.microchip.com) for the latest dsPIC33F Family Reference Manual chapters.

The dsPIC33FJ12MC201/202 architecture features separate program and data memory spaces and buses. This architecture also allows the direct access of program memory from the data space during code execution.

3.1 Program Address Space

The program address memory space of the dsPIC33FJ12MC201/202 devices is 4M instructions. The space is addressable by a 24-bit value derived either from the 23-bit Program Counter (PC) during program execution, or from table operation or data space remapping as described in **Section 3.6 "Interfacing Program and Data Memory Spaces"**.

User application access to the program memory space is restricted to the lower half of the address range (0x000000 to 0x7FFFFF). The exception is the use of `TBLRD/TBLWT` operations, which use TBLPAG<7> to permit access to the Configuration bits and Device ID sections of the configuration memory space.

The memory map for the dsPIC33FJ12MC201/202 devices is shown in Figure 3-1.

FIGURE 3-1: PROGRAM MEMORY MAP FOR dsPIC33FJ12MC201/202 DEVICES

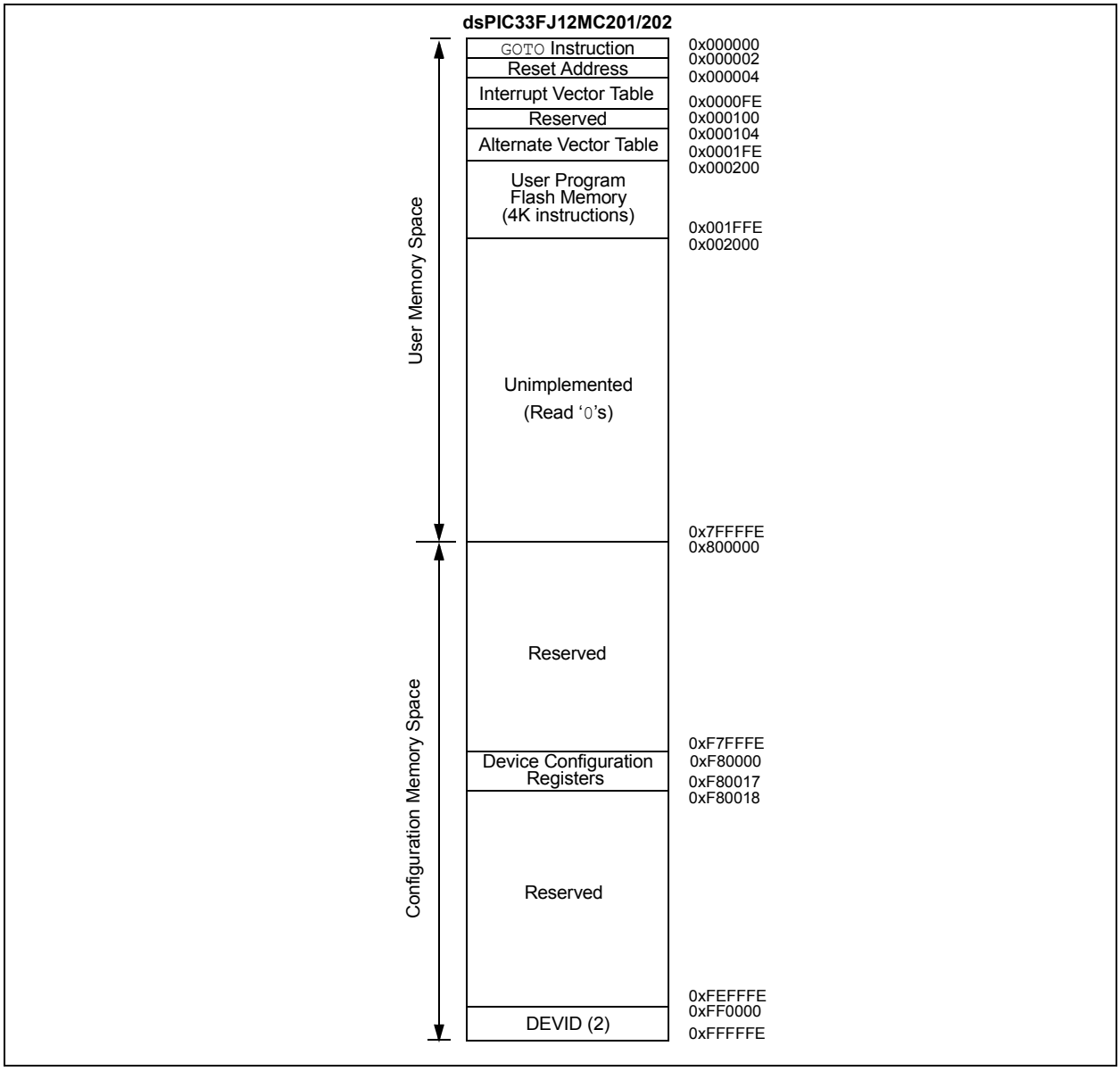

查询"DSPIC33FJ12MC02ESP"供应商

3.1.1 PROGRAM MEMORY ORGANIZATION

The program memory space is organized in word-addressable blocks. Although it is treated as 24 bits wide, it is more appropriate to think of each address of the program memory as a lower and upper word, with the upper byte of the upper word being unimplemented. The lower word always has an even address, while the upper word has an odd address (Figure 3-2).

Program memory addresses are always word-aligned on the lower word, and addresses are incremented or decremented by two during code execution. This arrangement provides compatibility with data memory space addressing and makes data in the program memory space accessible.

3.1.2 INTERRUPT AND TRAP VECTORS

All dsPIC33FJ12MC201/202 devices reserve the addresses between 0x00000 and 0x000200 for hard-coded program execution vectors. A hardware Reset vector is provided to redirect code execution from the default value of the PC on device Reset to the actual start of code. A `GOTO` instruction is programmed by the user application at 0x000000, with the actual address for the start of code at 0x000002.

dsPIC33FJ12MC201/202 devices also have two interrupt vector tables, located from 0x000004 to 0x0000FF and 0x000100 to 0x0001FF. These vector tables allow each of the device interrupt sources to be handled by separate Interrupt Service Routines (ISRs). A more detailed discussion of the interrupt vector tables is provided in **Section 6.1 "Interrupt Vector Table"**.

FIGURE 3-2: PROGRAM MEMORY ORGANIZATION

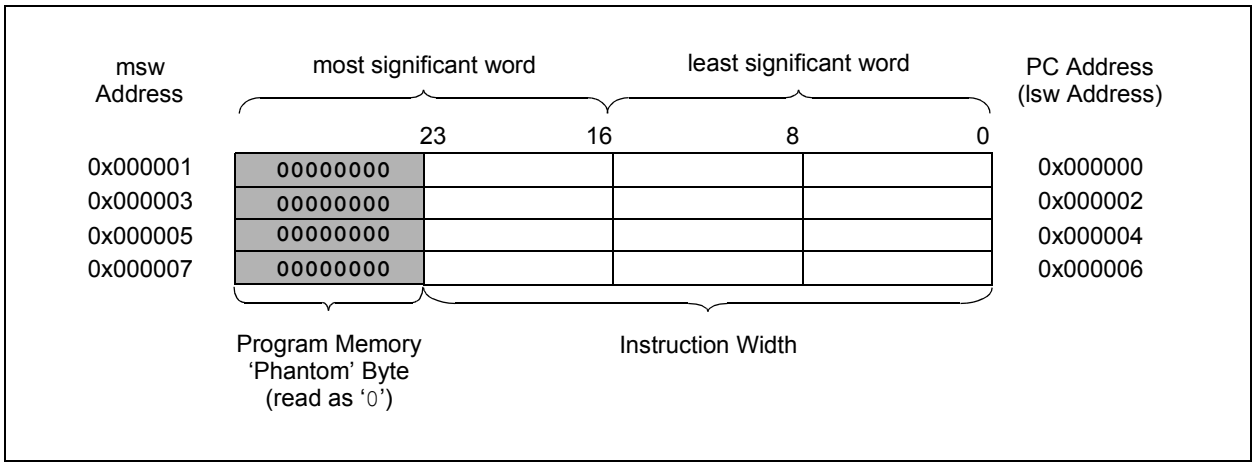

 © 2007 Microchip Technology Inc.

查询"DSPIC33FJ12MC02ESP"供应商

3.2 Data Address Space

The dsPIC33FJ12MC201/202 CPU has a separate 16-bit-wide data memory space. The data space is accessed using separate Address Generation Units (AGUs) for read and write operations. The data memory maps is shown in Figure 3-3.

All Effective Addresses (EAs) in the data memory space are 16 bits wide and point to bytes within the data space. This arrangement gives a data space address range of 64 Kbytes or 32K words. The lower half of the data memory space (that is, when EA<15> = 0) is used for implemented memory addresses, while the upper half (EA<15> = 1) is reserved for the Program Space Visibility area (see **Section 3.6.3 "Reading Data From Program Memory Using Program Space Visibility"**).

dsPIC33FJ12MC201/202 devices implement up to 30 Kbytes of data memory. Should an EA point to a location outside of this area, an all-zero word or byte will be returned.

3.2.1 DATA SPACE WIDTH

The data memory space is organized in byte addressable, 16-bit wide blocks. Data is aligned in data memory and registers as 16-bit words, but all data space EAs resolve to bytes. The Least Significant Bytes (LSBs) of each word have even addresses, while the Most Significant Bytes (MSBs) have odd addresses.

3.2.2 DATA MEMORY ORGANIZATION AND ALIGNMENT

To maintain backward compatibility with PIC® MCU devices and improve data space memory usage efficiency, the dsPIC33FJ12MC201/202 instruction set supports both word and byte operations. As a consequence of byte accessibility, all effective address calculations are internally scaled to step through word-aligned memory. For example, the core recognizes that Post-Modified Register Indirect Addressing mode [Ws++] will result in a value of Ws + 1 for byte operations and Ws + 2 for word operations.

Data byte reads will read the complete word that contains the byte, using the LSB of any EA to determine which byte to select. The selected byte is placed onto the LSB of the data path. That is, data memory and registers are organized as two parallel byte-wide entities with shared (word) address decode but separate write lines. Data byte writes only write to the corresponding side of the array or register that matches the byte address.

All word accesses must be aligned to an even address. Misaligned word data fetches are not supported, so care must be taken when mixing byte and word operations, or translating from 8-bit MCU code. If a misaligned read or write is attempted, an address error trap is generated. If the error occurred on a read, the instruction underway is completed. If the error occurred on a write, the instruction is executed but the write does not occur. In either case, a trap is then executed, allowing the system and/or user application to examine the machine state prior to execution of the address Fault.

All byte loads into any W register are loaded into the Least Significant Byte. The Most Significant Byte is not modified.

A sign-extend instruction (SE) is provided to allow user applications to translate 8-bit signed data to 16-bit signed values. Alternatively, for 16-bit unsigned data, user applications can clear the MSB of any W register by executing a zero-extend (ZE) instruction on the appropriate address.

3.2.3 SFR SPACE

The first 2 Kbytes of the Near Data Space, from 0x0000 to 0x07FF, is primarily occupied by Special Function Registers (SFRs). These are used by the dsPIC33FJ12MC201/202 core and peripheral modules for controlling the operation of the device.

SFRs are distributed among the modules that they control, and are generally grouped together by module. Much of the SFR space contains unused addresses; these are read as '0'.

Note:	The actual set of peripheral features and interrupts varies by the device. Refer to the corresponding device tables and pinout diagrams for device-specific information.

3.2.4 NEAR DATA SPACE

The 8-Kbyte area between 0x0000 and 0x1FFF is referred to as the near data space. Locations in this space are directly addressable via a 13-bit absolute address field within all memory direct instructions. Additionally, the whole data space is addressable using MOV instructions, which support Memory Direct Addressing mode with a 16-bit address field, or by using Indirect Addressing mode using a working register as an address pointer.

查询"DSPIC33FJ12MC02ESP"供应商

FIGURE 3-3: DATA MEMORY MAP FOR dsPIC33FJ12MC201/202 DEVICES WITH 1 KB RAM

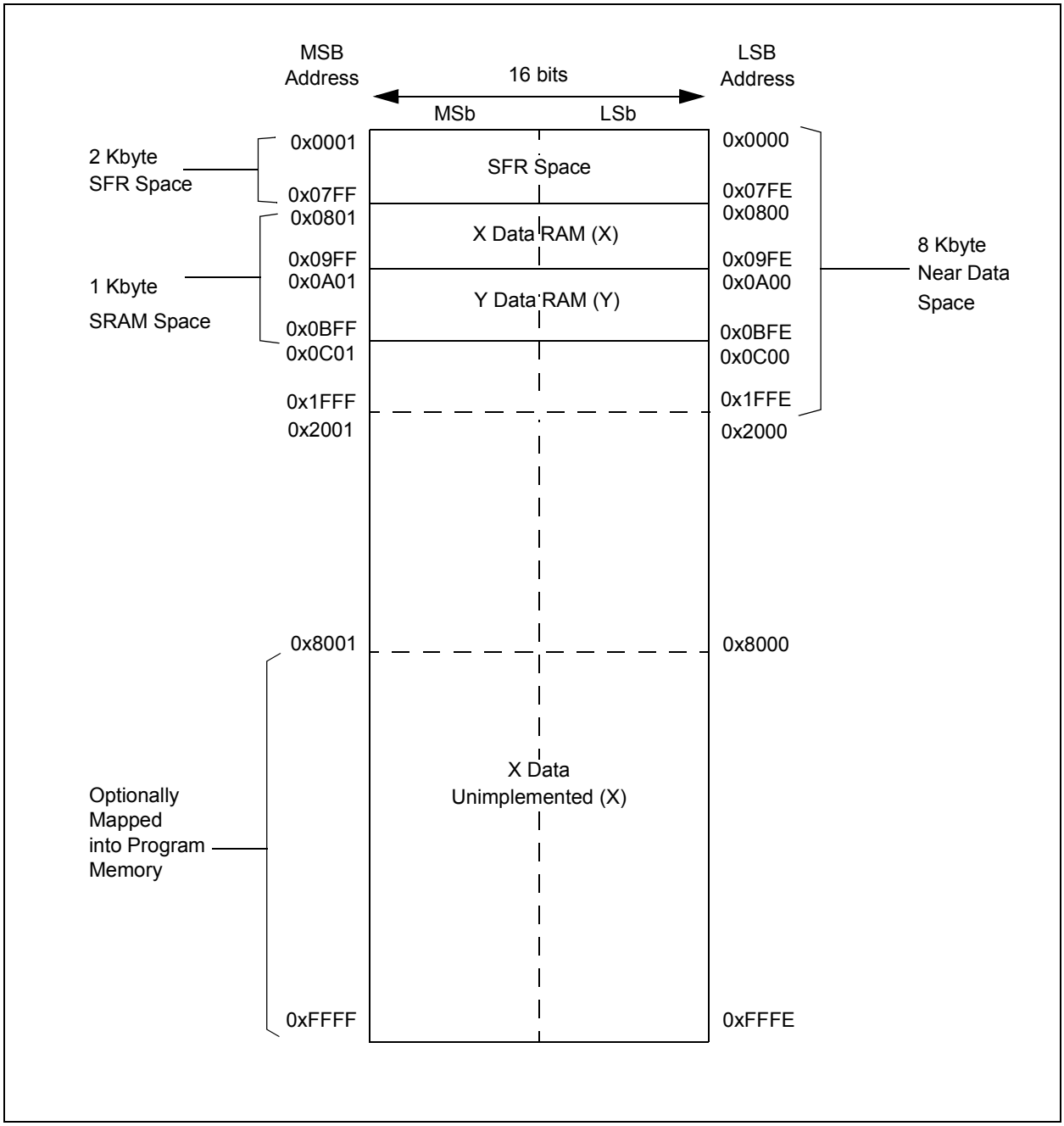

 © 2007 Microchip Technology Inc.

查询"DSPIC33FJ12MC02ESP"供应商

3.2.5 X AND Y DATA SPACES

The core has two data spaces, X and Y. These data spaces can be considered either separate (for some DSP instructions), or as one unified linear address range (for MCU instructions). The data spaces are accessed using two Address Generation Units (AGUs) and separate data paths. This feature allows certain instructions to concurrently fetch two words from RAM, thereby enabling efficient execution of DSP algorithms such as Finite Impulse Response (FIR) filtering and Fast Fourier Transform (FFT).

The X data space is used by all instructions and supports all addressing modes. X data space has separate read and write data buses. The X read data bus is the read data path for all instructions that view data space as combined X and Y address space. It is also the X data prefetch path for the dual operand DSP instructions (`MAC` class).

The Y data space is used in concert with the X data space by the `MAC` class of instructions (`CLR`, `ED`, `EDAC`, `MAC`, `MOVSAC`, `MPY`, `MPY.N` and `MSC`) to provide two concurrent data read paths.

Both the X and Y data spaces support Modulo Addressing mode for all instructions, subject to addressing mode restrictions. Bit-Reversed Addressing mode is only supported for writes to X data space.

All data memory writes, including in DSP instructions, view data space as combined X and Y address space. The boundary between the X and Y data spaces is device-dependent and is not user-programmable.

All effective addresses are 16 bits wide and point to bytes within the data space. Therefore, the data space address range is 64 Kbytes, or 32K words, though the implemented memory locations vary by device.

查询"DSPIC33FJ12MC02ESP"供应商

TABLE 3-1: CPU CORE REGISTERS MAP

SFR Name	SFR Addr	Bit 15	Bit 14	Bit 13	Bit 12	Bit 11	Bit 10	Bit 9	Bit 8	Bit 7	Bit 6	Bit 5	Bit 4	Bit 3	Bit 2	Bit 1	Bit 0	All Resets
WREG0	0000	Working Register 0																0000
WREG1	0002	Working Register 1																0000
WREG2	0004	Working Register 2																0000
WREG3	0006	Working Register 3																0000
WREG4	0008	Working Register 4																0000
WREG5	000A	Working Register 5																0000
WREG6	000C	Working Register 6																0000
WREG7	000E	Working Register 7																0000
WREG8	0010	Working Register 8																0000
WREG9	0012	Working Register 9																0000
WREG10	0014	Working Register 10																0000
WREG11	0016	Working Register 11																0000
WREG12	0018	Working Register 12																0000
WREG13	001A	Working Register 13																0000
WREG14	001C	Working Register 14																0000
WREG15	001E	Working Register 15																0800
SPLIM	0020	Stack Pointer Limit Register																xxxx
PCL	002E	Program Counter Low Word Register																0000
PCH	0030	—	—	—	—	—	—	—	—	Program Counter High Byte Register								0000
TBLPAG	0032	—	—	—	—	—	—	—	—	Table Page Address Pointer Register								0000
PSVPAG	0034	—	—	—	—	—	—	—	—	Program Memory Visibility Page Address Pointer Register								0000
RCOUNT	0036	Repeat Loop Counter Register																xxxx
DCOUNT	0038	DCOUNT<15:0>																xxxx
DOSTARTL	003A	DOSTARTL<15:1>															0	xxxx
DOSTARTH	003C	—	—	—	—	—	—	—	—	—	—	DOSTARTH<5:0>						00xx
DOENDL	003E	DOENDL<15:1>															0	xxxx
DOENDH	0040	—	—	—	—	—	—	—	—	—	—	DOENDH						00xx
SR	0042	OA	OB	SA	SB	OAB	SAB	DA	DC	IPL2	IPL1	IPL0	RA	N	OV	Z	C	0000
CORCON	0044	—	—	—	US	EDT	DL<2:0>			SATA	SATB	SATDW	ACCSAT	IPL3	PSV	RND	IF	0000
MODCON	0046	XMODEN	YMODEN	—	—	BWM<3:0>				YWM<3:0>				XWM<3:0>				0000
XMODSRT	0048	XS<15:1>															0	xxxx
XMODEND	004A	XE<15:1>															1	xxxx
YMODSRT	004C	YS<15:1>															0	xxxx
YMODEND	004E	YE<15:1>															1	xxxx
XBREV	0050	BREN	XB<14:0>															xxxx
DISICNT	0052	—	—	Disable Interrupts Counter Register														xxxx

Legend: x = unknown value on Reset, — = unimplemented, read as '0'. Reset values are shown in hexadecimal.

Preliminary

© 2007 Microchip Technology Inc.

查询"DSPIC33FJ12MC02ESP"供应商

TABLE 3-2: CHANGE NOTIFICATION REGISTER MAP FOR dsPIC33FJ12MC202

SFR Name	SFR Addr	Bit 15	Bit 14	Bit 13	Bit 12	Bit 11	Bit 10	Bit 9	Bit 8	Bit 7	Bit 6	Bit 5	Bit 4	Bit 3	Bit 2	Bit 1	Bit 0	All Resets
CNEN1	0060	CN15IE	CN14IE	CN13IE	CN12IE	CN11IE	—	—	—	CN7IE	CN6IE	CN5IE	CN4IE	CN3IE	CN2IE	CN1IE	CN0IE	0000
CNEN2	0062	—	CN30IE	CN29IE	—	CN27IE	—	—	CN24IE	CN23IE	CN22IE	CN21IE	—	—	—	—	CN16IE	0000
CNPU1	0068	CN15PUE	CN14PUE	CN13PUE	CN12PUE	CN11PUE	—	—	—	CN7PUE	CN6PUE	CN5PUE	CN4PUE	CN3PUE	CN2PUE	CN1PUE	CN0PUE	0000
CNPU2	006A	—	CN30PUE	CN29PUE	—	CN27PUE	—	—	CN24PUE	CN23PUE	CN22PUE	CN21PUE	—	—	—	—	CN16PUE	0000

Legend: x = unknown value on Reset, — = unimplemented, read as '0'. Reset values are shown in hexadecimal.

TABLE 3-3: CHANGE NOTIFICATION REGISTER MAP FOR dsPIC33FJ12MC201

SFR Name	SFR Addr	Bit 15	Bit 14	Bit 13	Bit 12	Bit 11	Bit 10	Bit 9	Bit 8	Bit 7	Bit 6	Bit 5	Bit 4	Bit 3	Bit 2	Bit 1	Bit 0	All Resets
CNEN1	0060	—	CN14IE	CN13IE	CN12IE	CN11IE	—	—	—	—	—	CN5IE	CN4IE	CN3IE	CN2IE	CN1IE	CN0IE	0000
CNEN2	00C2	—	CN30IE	CN29IE	—	—	—	—	—	CN23IE	CN22IE	CN21IE	—	—	—	—	—	0000
CNPU1	0068	—	CN14PUE	CN13PUE	CN12PUE	CN11PUE	—	—	—	—	—	CN5PUE	CN4PUE	CN3PUE	CN2PUE	CN1PUE	CN0PUE	0000
CNPU2	006A	—	CN30PUE	CN29PUE	—	—	—	—	—	CN23PUE	CN22PUE	CN21PUE	—	—	—	—	—	0000

Legend: x = unknown value on Reset, — = unimplemented, read as '0'. Reset values are shown in hexadecimal.

查询"DSPIC33FJ12MC202ESP"供应商

TABLE 3-4: INTERRUPT CONTROLLER REGISTER MAP

SFR Name	SFR Addr	Bit 15	Bit 14	Bit 13	Bit 12	Bit 11	Bit 10	Bit 9	Bit 8	Bit 7	Bit 6	Bit 5	Bit 4	Bit 3	Bit 2	Bit 1	Bit 0	All Resets
INTCON1	0080	NSTDIS	OVAERR	OVBERR	COVAERR	COVBERR	OVATE	OVBTE	COVTE	SFTACERR	DIV0ERR	—	MATHERR	ADDRERR	STKERR	OSCFAIL	—	0000
INTCON2	0082	ALTIVT	DISI	—	—	—	—	—	—	—	—	—	—	—	INT2EP	INT1EP	INT0EP	0000
IFS0	0084	—	—	AD1IF	U1TXIF	U1RXIF	SPI1IF	SPI1EIF	T3IF	T2IF	OC2IF	IC2IF	—	T1IF	OC1IF	IC1IF	INT0IF	0000
IFS1	0086	—	—	INT2IF	—	—	—	—	—	IC8IF	IC7IF	—	INT1IF	CNIF	—	MI2C1IF	SI2C1IF	0000
IFS3	008A	FLTA1IF	—	—	—	—	QEIIF	PWM1IF	—	—	—	—	—	—	—	—	—	0000
IFS4	008C	—	—	—	—	—	FLTA2IF	PWM2IF	—	—	—	—	—	—	—	U1EIF	—	0000
IEC0	0094	—	—	AD1IE	U1TXIE	U1RXIE	SPI1IE	SPI1EIE	T3IE	T2IE	OC2IE	IC2IE	—	T1IE	OC1IE	IC1IE	INT0IE	0000
IEC1	0096	—	—	INT2IE	—	—	—	—	—	IC8IE	IC7IE	—	INT1IE	CNIE	—	MI2C1IE	SI2C1IE	0000
IEC3	009A	FLTA1IE	—	—	—	—	QEIIE	PWM1IE	—	—	—	—	—	—	—	—	—	0000
IEC4	009C	—	—	—	—	—	FLTA2IE	PWM2IE	—	—	—	—	—	—	—	U1EIE	—	0000
IPC0	00A4	—	T1IP<2:0>			—	OC1IP<2:0>			—	IC1IP<2:0>			—	INT0IP<2:0>			4444
IPC1	00A6	—	T2IP<2:0>			—	OC2IP<2:0>			—	IC2IP<2:0>			—	—	—	—	4444
IPC2	00A8	—	U1RXIP<2:0>			—	SPI1IP<2:0>			—	SPI1EIP<2:0>			—	T3IP<2:0>			4444
IPC3	00AA	—	—	—	—	—	—	—	—	—	AD1IP<2:0>			—	U1TXIP<2:0>			4444
IPC4	00AC	—	CNIP<2:0>			—	—	—	—	—	MI2C1IP<2:0>			—	SI2C1IP<2:0>			4444
IPC5	00AE	—	IC8IP<2:0>			—	IC7IP<2:0>			—	—	—	—	—	INT1IP<2:0>			4444
IPC7	00B2	—	—	—	—	—	—	—	—	—	INT2IP<2:0>			—	—	—	—	4444
IPC14	00C0	—	—	—	—	—	QEIIP<2:0>			—	PWM1IP<2:0>			—	—	—	—	4444
IPC15	00C2	—	FLTA1IP<2:0>			—	—	—	—	—	—	—	—	—	—	—	—	4444
IPC16	00C4	—	—	—	—	—	—	—	—	—	U1EIP<2:0>			—	—	—	—	4444
IPC18	00C8	—	—	—	—	—	FLTA2IP<2:0>			—	PWM2IP<2:0>			—	—	—	—	4444
INTTREG	00E0	—	—	—	—	ILR<3:0>>				—	VECNUM<6:0>							4444

Legend: x = unknown value on Reset, — = unimplemented, read as '0'. Reset values are shown in hexadecimal.

Preliminary

© 2007 Microchip Technology Inc.

查询"DSPIC33FJ12MC02ESP"供应商

TABLE 3-5: TIMER REGISTER MAP

SFR Name	SFR Addr	Bit 15	Bit 14	Bit 13	Bit 12	Bit 11	Bit 10	Bit 9	Bit 8	Bit 7	Bit 6	Bit 5	Bit 4	Bit 3	Bit 2	Bit 1	Bit 0	All Resets
TMR1	0100	Timer1 Register																xxxx
PR1	0102	Period Register 1																FFFF
T1CON	0104	TON	—	TSIDL	—	—	—	—	—	—	TGATE	TCKPS<1:0>		—	TSYNC	TCS	—	0000
TMR2	0106	Timer2 Register																xxxx
TMR3HLD	0108	Timer3 Holding Register (for 32-bit timer operations only)																xxxx
TMR3	010A	Timer3 Register																xxxx
PR2	010C	Period Register 2																FFFF
PR3	010E	Period Register 3																FFFF
T2CON	0110	TON	—	TSIDL	—	—	—	—	—	—	TGATE	TCKPS<1:0>		T32	—	TCS	—	0000
T3CON	0112	TON	—	TSIDL	—	—	—	—	—	—	TGATE	TCKPS<1:0>		—	—	TCS	—	0000

Legend: x = unknown value on Reset, — = unimplemented, read as '0'. Reset values are shown in hexadecimal.

TABLE 3-6: INPUT CAPTURE REGISTER MAP

SFR Name	SFR Addr	Bit 15	Bit 14	Bit 13	Bit 12	Bit 11	Bit 10	Bit 9	Bit 8	Bit 7	Bit 6	Bit 5	Bit 4	Bit 3	Bit 2	Bit 1	Bit 0	All Resets
IC1BUF	0140	Input 1 Capture Register																xxxx
IC1CON	0142	—	—	ICSIDL	—	—	—	—	—	ICTMR	ICI<1:0>		ICOV	ICBNE	ICM<2:0>			0000
IC2BUF	0144	Input 2 Capture Register																xxxx
IC2CON	0146	—	—	ICSIDL	—	—	—	—	—	ICTMR	ICI<1:0>		ICOV	ICBNE	ICM<2:0>			0000
IC7BUF	0158	Input 7 Capture Register																xxxx
IC7CON	015A	—	—	ICSIDL	—	—	—	—	—	ICTMR	ICI<1:0>		ICOV	ICBNE	ICM<2:0>			0000
IC8BUF	015C	Input 8Capture Register																xxxx
IC8CON	015E	—	—	ICSIDL	—	—	—	—	—	ICTMR	ICI<1:0>		ICOV	ICBNE	ICM<2:0>			0000

Legend: x = unknown value on Reset, — = unimplemented, read as '0'. Reset values are shown in hexadecimal.

TABLE 3-7: OUTPUT COMPARE REGISTER MAP

SFR Name	SFR Addr	Bit 15	Bit 14	Bit 13	Bit 12	Bit 11	Bit 10	Bit 9	Bit 8	Bit 7	Bit 6	Bit 5	Bit 4	Bit 3	Bit 2	Bit 1	Bit 0	All Resets
OC1RS	0180	Output Compare 1 Secondary Register																xxxx
OC1R	0182	Output Compare 1 Register																xxxx
OC1CON	0184	—	—	OCSIDL	—	—	—	—	—	—	—	—	OCFLT	OCTSEL	OCM<2:0>			0000
OC2RS	0186	Output Compare 2 Secondary Register																xxxx
OC2R	0188	Output Compare 2 Register																xxxx
OC2CON	018A	—	—	OCSIDL	—	—	—	—	—	—	—	—	OCFLT	OCTSEL	OCM<2:0>			0000

Legend: x = unknown value on Reset, — = unimplemented, read as '0'. Reset values are shown in hexadecimal.

查询"DSPIC33FJ12MC02ESP"供应商

TABLE 3-8: 6-OUTPUT PWM1 REGISTER MAP FOR dsPIC33FJ12MC202

SFR Name	Addr.	Bit 15	Bit 14	Bit 13	Bit 12	Bit 11	Bit 10	Bit 9	Bit 8	Bit 7	Bit 6	Bit 5	Bit 4	Bit 3	Bit 2	Bit 1	Bit 0	Reset State
P1TCON	01C0	PTEN	—	PTSIDL	—	—	—	—	—	PTOPS<3:0>				PTCKPS<1:0>		PTMOD<1:0>		0000 0000 0000 0000
P1TMR	01C2	PTDIR	PWM Timer Count Value Register															0000 0000 0000 0000
P1TPER	01C4	—	PWM Time Base Period Register															0000 0000 0000 0000
P1SECMP	01C6	SEVTDIR	PWM Special Event Compare Register															0000 0000 0000 0000
PWM1CON1	01C8	—	—	—	—	—	PMOD3	PMOD2	PMOD1	—	PEN3H	PEN2H	PEN1H	—	PEN3L	PEN2L	PEN1L	0000 0000 1111 1111
PWM1CON2	01CA	—	—	—	—	SEVOPS<3:0>				—	—	—	—	—	IUE	OSYNC	UDIS	0000 0000 0000 0000
P1DTCON1	01CC	DTBPS<1:0>		DTB<5:0>						DTAPS<1:0>		DTA<5:0>						0000 0000 0000 0000
P1DTCON2	01CE	—	—	—	—	—	—	—	—	—	—	DTS3A	DTS3I	DTS2A	DTS2I	DTS1A	DTS1I	0000 0000 0000 0000
P1FLTACON	01D0	—	—	FAOV3H	FAOV3L	FAOV2H	FAOV2L	FAOV1H	FAOV1L	FLTAM	—	—	—	—	FAEN3	FAEN2	FAEN1	0000 0000 0000 0000
P1OVDCON	01D4	—	—	POVD3H	POVD3L	POVD2H	POVD2L	POVD1H	POVD1L	—	—	POUT3H	POUT3L	POUT2H	POUT2L	POUT1H	POUT1L	1111 1111 0000 0000
P1DC1	01D6	PWM Duty Cycle #1 Register																0000 0000 0000 0000
P1DC2	01D8	PWM Duty Cycle #2 Register																0000 0000 0000 0000
P1DC3	01DA	PWM Duty Cycle #3 Register																0000 0000 0000 0000

Legend: u = uninitialized bit, — = unimplemented, read as '0'

TABLE 3-9: 4-OUTPUT PWM1 REGISTER MAP FOR dsPIC33FJ12MC201

SFR Name	Addr.	Bit 15	Bit 14	Bit 13	Bit 12	Bit 11	Bit 10	Bit 9	Bit 8	Bit 7	Bit 6	Bit 5	Bit 4	Bit 3	Bit 2	Bit 1	Bit 0	Reset State
P1TCON	01C0	PTEN	—	PTSIDL	—	—	—	—	—	PTOPS<3:0>				PTCKPS<1:0>		PTMOD<1:0>		0000 0000 0000 0000
P1TMR	01C2	PTDIR	PWM Timer Count Value Register															0000 0000 0000 0000
P1TPER	01C4	—	PWM Time Base Period Register															0000 0000 0000 0000
P1SECMP	01C6	SEVTDIR	PWM Special Event Compare Register															0000 0000 0000 0000
PWM1CON1	01C8	—	—	—	—	—	—	PMOD2	PMOD1	—	—	PEN2H	PEN1H	—	—	PEN2L	PEN1L	0000 0000 1111 1111
PWM1CON2	01CA	—	—	—	—	SEVOPS<3:0>				—	—	—	—	—	IUE	OSYNC	UDIS	0000 0000 0000 0000
P1DTCON1	01CC	DTBPS<1:0>		DTB<5:0>						DTAPS<1:0>		DTA<5:0>						0000 0000 0000 0000
P1DTCON2	01CE	—	—	—	—	—	—	—	—	—	—	—	—	DTS2A	DTS2I	DTS1A	DTS1I	0000 0000 0000 0000
P1FLTACON	01D0	—	—	—	—	FAOV2H	FAOV2L	FAOV1H	FAOV1L	FLTAM	—	—	—	—	—	FAEN2	FAEN1	0000 0000 0000 0000
P1OVDCON	01D4	—	—	—	—	POVD2H	POVD2L	POVD1H	POVD1L	—	—	—	—	POUT2H	POUT2L	POUT1H	POUT1L	1111 1111 0000 0000
P1DC1	01D6	PWM Duty Cycle #1 Register																0000 0000 0000 0000
P1DC2	01D8	PWM Duty Cycle #2 Register																0000 0000 0000 0000

Legend: u = uninitialized bit, — = unimplemented, read as '0'

Preliminary

© 2007 Microchip Technology Inc.

查询"DSPIC33FJ12MC02ESP"供应商

TABLE 3-10: 2-OUTPUT PWM2 REGISTER MAP

SFR Name	Addr.	Bit 15	Bit 14	Bit 13	Bit 12	Bit 11	Bit 10	Bit 9	Bit 8	Bit 7	Bit 6	Bit 5	Bit 4	Bit 3	Bit 2	Bit 1	Bit 0	Reset State
P2TCON	05C0	PTEN	—	PTSIDL	—	—	—	—	—	PTOPS<3:0>				PTCKPS<1:0>		PTMOD<1:0>		0000 0000 0000 0000
P2TMR	05C2	PTDIR	PWM Timer Count Value Register															0000 0000 0000 0000
P2TPER	05C4	—	PWM Time Base Period Register															0000 0000 0000 0000
P2SECMP	05C6	SEVTDIR	PWM Special Event Compare Register															0000 0000 0000 0000
PWM2CON1	05C8	—	—	—	—	—	—	—	PMOD1	—	—	—	PEN1H	—	—	—	PEN1L	0000 0000 1111 1111
PWM2CON2	05CA	—	—	—	—	SEVOPS<3:0>				—	—	—	—	—	IUE	OSYNC	UDIS	0000 0000 0000 0000
P2DTCON1	05CC	DTBPS<1:0>		DTB<5:0>						DTAPS<1:0>		DTA<5:0>						0000 0000 0000 0000
P2DTCON2	05CE	—	—	—	—	—	—	—	—	—	—	—	—	—	—	DTS1A	DTS1I	0000 0000 0000 0000
P2FLTACON	05D0	—	—	—	—	—	—	FAOV1H	FAOV1L	FLTAM	—	—	—	—	—	—	FAEN1	0000 0000 0000 0000
P2OVDCON	05D4	—	—	—	—	—	—	POVD1H	POVD1L	—	—	—	—	—	—	POUT1H	POUT1L	1111 1111 0000 0000
P2DC1	05D6	PWM Duty Cycle #1 Register																0000 0000 0000 0000

Legend: u = uninitialized bit, — = unimplemented, read as '0'

TABLE 3-11: QEI REGISTER MAP

SFR Name	Addr.	Bit 15	Bit 14	Bit 13	Bit 12	Bit 11	Bit 10	Bit 9	Bit 8	Bit 7	Bit 6	Bit 5	Bit 4	Bit 3	Bit 2	Bit 1	Bit 0	Reset State
QEICON	01E0	CNTERR	—	QEISIDL	INDX	UPDN	QEIM<2:0>			SWPAB	PCDOUT	TQGATE	TQCKPS<1:0>		POSRES	TQCS	UPDN_SRC	0000 0000 0000 0000
DFLTCON	01E2	—	—	—	—	—	IMV<1:0>		CEID	QEOUT	QECK<2:0>			—	—	—	—	0000 0000 0000 0000
POSCNT	01E4	Position Counter<15:0>																0000 0000 0000 0000
MAXCNT	01E6	Maximum Count<15:0>																1111 1111 1111 1111

Legend: u = uninitialized bit, — = unimplemented, read as '0'

TABLE 3-12: I2C1 REGISTER MAP

SFR Name	SFR Addr	Bit 15	Bit 14	Bit 13	Bit 12	Bit 11	Bit 10	Bit 9	Bit 8	Bit 7	Bit 6	Bit 5	Bit 4	Bit 3	Bit 2	Bit 1	Bit 0	All Resets
I2C1RCV	0200	—	—	—	—	—	—	—	—	Receive Register								0000
I2C1TRN	0202	—	—	—	—	—	—	—	—	Transmit Register								00FF
I2C1BRG	0204	—	—	—	—	—	—	—	Baud Rate Generator Register									0000
I2C1CON	0206	I2CEN	—	I2CSIDL	SCLREL	IPMIEN	A10M	DISSLW	SMEN	GCEN	STREN	ACKDT	ACKEN	RCEN	PEN	RSEN	SEN	1000
I2C1STAT	0208	ACKSTAT	TRSTAT	—	—	—	BCL	GCSTAT	ADD10	IWCOL	I2COV	D_A	P	S	R_W	RBF	TBF	0000
I2C1ADD	020A	—	—	—	—	—	—	Address Register										0000
I2C1MSK	020C	—	—	—	—	—	—	Address Mask Register										0000

Legend: x = unknown value on Reset, — = unimplemented, read as '0'. Reset values are shown in hexadecimal.

查询"DSPIC33FJ12MC02ESP"供应商

TABLE 3-13: UART1 REGISTER MAP

SFR Name	SFR Addr	Bit 15	Bit 14	Bit 13	Bit 12	Bit 11	Bit 10	Bit 9	Bit 8	Bit 7	Bit 6	Bit 5	Bit 4	Bit 3	Bit 2	Bit 1	Bit 0	All Resets
U1MODE	0220	UARTEN	—	USIDL	IREN	RTSMD	—	UEN1	UEN0	WAKE	LPBACK	ABAUD	URXINV	BRGH	PDSEL<1:0>		STSEL	0000
U1STA	0222	UTXISEL1	UTXINV	UTXISEL0	—	UTXBRK	UTXEN	UTXBF	TRMT	URXISEL<1:0>		ADDEN	RIDLE	PERR	FERR	OERR	URXDA	0110
U1TXREG	0224	—	—	—	—	—	—	—	UART Transmit Register									xxxx
U1RXREG	0226	—	—	—	—	—	—	—	UART Receive Register									0000
U1BRG	0228	Baud Rate Generator Prescaler																0000

Legend: x = unknown value on Reset, — = unimplemented, read as '0'. Reset values are shown in hexadecimal.

TABLE 3-14: SPI1 REGISTER MAP

SFR Name	SFR Addr	Bit 15	Bit 14	Bit 13	Bit 12	Bit 11	Bit 10	Bit 9	Bit 8	Bit 7	Bit 6	Bit 5	Bit 4	Bit 3	Bit 2	Bit 1	Bit 0	All Resets
SPI1STAT	0240	SPIEN	—	SPISIDL	—	—	—	—	—	—	SPIROV	—	—	—	—	SPITBF	SPIRBF	0000
SPI1CON1	0242	—	—	—	DISSCK	DISSDO	MODE16	SMP	CKE	SSEN	CKP	MSTEN	SPRE<2:0>			PPRE<1:0>		0000
SPI1CON2	0244	FRMEN	SPIFSD	FRMPOL	—	—	—	—	—	—	—	—	—	—	—	FRMDLY	—	0000
SPI1BUF	0248	SPI1 Transmit and Receive Buffer Register																0000

Legend: x = unknown value on Reset, — = unimplemented, read as '0'. Reset values are shown in hexadecimal.

© 2007 Microchip Technology Inc.

查询"DSPIC33FJ12MC202ESP"供应商

TABLE 3-15: ADC1 REGISTER MAP FOR dsPIC33FJ12MC202

File Name	Addr	Bit 15	Bit 14	Bit 13	Bit 12	Bit 11	Bit 10	Bit 9	Bit 8	Bit 7	Bit 6	Bit 5	Bit 4	Bit 3	Bit 2	Bit 1	Bit 0	All Resets
ADC1BUF0	0300	ADC Data Buffer 0																xxxx
ADC1BUF1	0302	ADC Data Buffer 1																xxxx
ADC1BUF2	0304	ADC Data Buffer 2																xxxx
ADC1BUF3	0306	ADC Data Buffer 3																xxxx
ADC1BUF4	0308	ADC Data Buffer 4																xxxx
ADC1BUF5	030A	ADC Data Buffer 5																xxxx
ADC1BUF6	030C	ADC Data Buffer 6																xxxx
ADC1BUF7	030E	ADC Data Buffer 7																xxxx
ADC1BUF8	0310	ADC Data Buffer 8																xxxx
ADC1BUF9	0312	ADC Data Buffer 9																xxxx
ADC1BUFA	0314	ADC Data Buffer 10																xxxx
ADC1BUFB	0316	ADC Data Buffer 11																xxxx
ADC1BUFC	0318	ADC Data Buffer 12																xxxx
ADC1BUFD	031A	ADC Data Buffer 13																xxxx
ADC1BUFE	031C	ADC Data Buffer 14																xxxx
ADC1BUFF	031E	ADC Data Buffer 15																xxxx
AD1CON1	0320	ADON	—	ADSIDL	—	—	AD12B	FORM<1:0>		SSRC<2:0>			—	SIMSAM	ASAM	SAMP	DONE	0000
AD1CON2	0322	VCFG<2:0>			—	—	CSCNA	CHPS<1:0>		BUFS	—	SMPI<3:0>				BUFM	ALTS	0000
AD1CON3	0324	ADRC	—	—	SAMC<4:0>					—	—	ADCS<5:0>						0000
AD1CHS123	0326	—	—	—	—	—	CH123NB<1:0>		CH123SB	—	—	—	—	—	CH123NA<1:0>		CH123SA	0000
AD1CHS0	0328	CH0NB	—	—	CH0SB<4:0>					CH0NA	—	—	CH0SA<4:0>					0000
AD1PCFGL	032C	—	—	—	—	—	—	—	—	—	—	PCFG5	PCFG4	PCFG3	PCFG2	PCFG1	PCFG0	0000
AD1CSSL	0330	—	—	—	—	—	—	—	—	—	—	CSS5	CSS4	CSS3	CSS2	CSS1	CSS0	0000

Legend: x = unknown value on Reset, — = unimplemented, read as '0'. Reset values are shown in hexadecimal.

查询"DSPIC33FJ12MC02ESP"供应商

TABLE 3-16: ADC1 REGISTER MAP FOR dsPIC33FJ12MC201

File Name	Addr	Bit 15	Bit 14	Bit 13	Bit 12	Bit 11	Bit 10	Bit 9	Bit 8	Bit 7	Bit 6	Bit 5	Bit 4	Bit 3	Bit 2	Bit 1	Bit 0	All Resets
ADC1BUF0	0300	ADC Data Buffer 0																xxxx
ADC1BUF1	0302	ADC Data Buffer 1																xxxx
ADC1BUF2	0304	ADC Data Buffer 2																xxxx
ADC1BUF3	0306	ADC Data Buffer 3																xxxx
ADC1BUF4	0308	ADC Data Buffer 4																xxxx
ADC1BUF5	030A	ADC Data Buffer 5																xxxx
ADC1BUF6	030C	ADC Data Buffer 6																xxxx
ADC1BUF7	030E	ADC Data Buffer 7																xxxx
ADC1BUF8	0310	ADC Data Buffer 8																xxxx
ADC1BUF9	0312	ADC Data Buffer 9																xxxx
ADC1BUFA	0314	ADC Data Buffer 10																xxxx
ADC1BUFB	0316	ADC Data Buffer 11																xxxx
ADC1BUFC	0318	ADC Data Buffer 12																xxxx
ADC1BUFD	031A	ADC Data Buffer 13																xxxx
ADC1BUFE	031C	ADC Data Buffer 14																xxxx
ADC1BUFF	031E	ADC Data Buffer 15																xxxx
AD1CON1	0320	ADON	—	ADSIDL	—	—	AD12B	FORM<1:0>		SSRC<2:0>			—	SIMSAM	ASAM	SAMP	DONE	0000
AD1CON2	0322	VCFG<2:0>			—	—	CSCNA	CHPS<1:0>		BUFS	—	SMPI<3:0>				BUFM	ALTS	0000
AD1CON3	0324	ADRC	—	—	SAMC<4:0>					—	—	ADCS<5:0>						0000
AD1CHS123	0326	—	—	—	—	—	CH123NB<1:0>		CH123SB	—	—	—	—	—	CH123NA<1:0>		CH123SA	0000
AD1CHS0	0328	CH0NB	—	—	CH0SB<4:0>					CH0NA	—	—	CH0SA<4:0>					0000
AD1PCFGL	032C	—	—	—	—	—	—	—	—	—	—	—	—	PCFG3	PCFG2	PCFG1	PCFG0	0000
AD1CSSL	0330	—	—	—	—	—	—	—	—	—	—	—	—	CSS3	CSS2	CSS1	CSS0	0000

Legend: x = unknown value on Reset, — = unimplemented, read as '0'. Reset values are shown in hexadecimal.

Preliminary

© 2007 Microchip Technology Inc.

查询"DSPIC33FJ12MC202FSP"供应商

TABLE 3-17: PERIPHERAL PIN SELECT INPUT REGISTER MAP

File Name	Addr	Bit 15	Bit 14	Bit 13	Bit 12	Bit 11	Bit 10	Bit 9	Bit 8	Bit 7	Bit 6	Bit 5	Bit 4	Bit 3	Bit 2	Bit 1	Bit 0	All Resets
RPINR0	0680	—	—	—	INT1R<4:0>					—	—	—	—	—	—	—	—	1F00
RPINR1	0682	—	—	—	—	—	—	—	—	—	—	—	INT2R<4:0>					001F
RPINR3	0686	—	—	—	T3CKR<4:0>					—	—	—	T2CKR<4:0>					1F1F
RPINR7	068E	—	—	—	IC2R<4:0>					—	—	—	IC1R<4:0>					1F1F
RPINR10	0694	—	—	—	IC8R<4:0>					—	—	—	IC7R<4:0>					1F1F
RPINR11	0696	—	—	—	—	—	—	—	—	—	—	—	OCFAR<4:0>					001F
RPINR12	0698	—	—	—	—	—	—	—	—	—	—	—	FLTA1R<4:0>					001F
RPINR13	069A	—	—	—	—	—	—	—	—	—	—	—	FLTA2R<4:0>					001F
RPINR14	069C	—	—	—	QEB1R<4:0>					—	—	—	QEA1R<4:0>					1F1F
RPINR15	069E	—	—	—	—	—	—	—	—	—	—	—	INDX1R<4:0>					001F
RPINR18	06A4	—	—	—	U1CTSR<4:0>					—	—	—	U1RXR<4:0>					1F1F
RPINR20	06A8	—	—	—	SCK1R<4:0>					—	—	—	SDI1R<4:0>					1F1F
RPINR21	06AA	—	—	—	—	—	—	—	—	—	—	—	SS1R<4:0>					001F

Legend: x = unknown value on Reset, — = unimplemented, read as '0'. Reset values are shown in hexadecimal.

TABLE 3-18: PERIPHERAL PIN SELECT OUTPUT REGISTER MAP FOR dsPIC33FJ12MC202

File Name	Addr	Bit 15	Bit 14	Bit 13	Bit 12	Bit 11	Bit 10	Bit 9	Bit 8	Bit 7	Bit 6	Bit 5	Bit 4	Bit 3	Bit 2	Bit 1	Bit 0	All Resets
RPOR0	06C0	—	—	—	RP1R<4:0>					—	—	—	RP0R<4:0>					0000
RPOR1	06C2	—	—	—	RP3R<4:0>					—	—	—	RP2R<4:0>					0000
RPOR2	06C4	—	—	—	RP5R<4:0>					—	—	—	RP4R<4:0>					0000
RPOR3	06C6	—	—	—	RP7R<4:0>					—	—	—	RP6R<4:0>					0000
RPOR4	06C8	—	—	—	RP9R<4:0>					—	—	—	RP8R<4:0>					0000
RPOR5	06CA	—	—	—	RP11R<4:0>					—	—	—	RP10R<4:0>					0000
RPOR6	06CC	—	—	—	RP13R<4:0>					—	—	—	RP12R<4:0>					0000
RPOR7	06CE	—	—	—	RP15R<4:0>					—	—	—	RP14R<4:0>					0000

Legend: x = unknown value on Reset, — = unimplemented, read as '0'. Reset values are shown in hexadecimal.

查询"DSPIC33FJ12MC02ESP"供应商

TABLE 3-19: PERIPHERAL PIN SELECT OUTPUT REGISTER MAP FOR dsPIC33FJ12MC201

File Name	Addr	Bit 15	Bit 14	Bit 13	Bit 12	Bit 11	Bit 10	Bit 9	Bit 8	Bit 7	Bit 6	Bit 5	Bit 4	Bit 3	Bit 2	Bit 1	Bit 0	All Resets
RPOR0	06C0	—	—	—	RP1R<4:0>					—	—	—	RP0R<4:0>					0000
RPOR2	06C4	—	—	—	—	—	—	—	—	—	—	—	RP4R<4:0>					0000
RPOR3	06C6	—	—	—	RP7R<4:0>					—	—	—	—	—	—	—	—	0000
RPOR4	06C8	—	—	—	RP9R<4:0>					—	—	—	RP8R<4:0>					0000
RPOR6	06CC	—	—	—	RP13R<4:0>					—	—	—	RP12R<4:0>					0000
RPOR7	06CE	—	—	—	RP15R<4:0>					—	—	—	RP14R<4:0>					0000

Legend: x = unknown value on Reset, — = unimplemented, read as '0'. Reset values are shown in hexadecimal.

TABLE 3-20: PORTA REGISTER MAP

File Name	Addr	Bit 15	Bit 14	Bit 13	Bit 12	Bit 11	Bit 10	Bit 9	Bit 8	Bit 7	Bit 6	Bit 5	Bit 4	Bit 3	Bit 2	Bit 1	Bit 0	All Resets
TRISA	02C0	—	—	—	—	—	—	—	—	—	—	—	TRISA4	TRISA3	TRISA2	TRISA1	TRISA0	001F
PORTA	02C2	—	—	—	—	—	—	—	—	—	—	—	RA4	RA3	RA2	RA1	RA0	xxxx
LATA	02C4	—	—	—	—	—	—	—	—	—	—	—	LATA4	LATA3	LATA2	LATA1	LATA0	xxxx
ODCA	02C6	—	—	—	—	—	—	—	—	—	—	—	ODCA4	ODCA3	ODCA2	ODCA1	ODCA0	xxxx

Legend: x = unknown value on Reset, — = unimplemented, read as '0'. Reset values are shown in hexadecimal.

TABLE 3-21: PORTB REGISTER MAP FOR dsPIC33FJ12MC202

File Name	Addr	Bit 15	Bit 14	Bit 13	Bit 12	Bit 11	Bit 10	Bit 9	Bit 8	Bit 7	Bit 6	Bit 5	Bit 4	Bit 3	Bit 2	Bit 1	Bit 0	All Resets
TRISB	02C8	TRISB15	TRISB14	TRISB13	TRISB12	TRISB11	TRISB10	TRISB9	TRISB8	TRISB7	TRISB6	TRISB5	TRISB4	TRISB3	TRISB2	TRISB1	TRISB0	FFFF
PORTB	02CA	RB15	RB14	RB13	RB12	RB11	RB10	RB9	RB8	RB7	RB6	RB5	RB4	RB3	RB2	RB1	RB0	xxxx
LATB	02CC	LATB15	LATB14	LATB13	LATB12	LATB11	LATB10	LATB9	LATB8	LATB7	LATB6	LATB5	LATB4	LATB3	LATB2	LATB1	LATB0	xxxx
ODCB	02CE	ODCB15	ODCB14	ODCB13	ODCB12	ODCB11	ODCB10	ODCB9	ODCB8	ODCB7	ODCB6	ODCB5	ODCB4	ODCB3	ODCB2	ODCB1	ODCB0	xxxx

Legend: x = unknown value on Reset, — = unimplemented, read as '0'. Reset values are shown in hexadecimal.

TABLE 3-22: PORTB REGISTER MAP FOR dsPIC33FJ12MC201

File Name	Addr	Bit 15	Bit 14	Bit 13	Bit 12	Bit 11	Bit 10	Bit 9	Bit 8	Bit 7	Bit 6	Bit 5	Bit 4	Bit 3	Bit 2	Bit 1	Bit 0	All Resets
TRISB	02C8	TRISB15	TRISB14	TRISB13	TRISB12	—	—	TRISB9	TRISB8	TRISB7	—	—	TRISB4	—	—	TRISB1	TRISB0	F393
PORTB	02CA	RB15	RB14	RB13	RB12	—	—	RB9	RB8	RB7	—	—	RB4	—	—	RB1	RB0	xxxx
LATB	02CC	LATB15	LATB14	LATB13	LATB12	—	—	LATB9	LATB8	LATB7	—	—	LATB4	—	—	LATB1	LATB0	xxxx
ODCB	02CE	ODCB15	ODCB14	ODCB13	ODCB12	—	—	ODCB9	ODCB8	ODCB7	—	—	ODCB4	—	—	ODCB1	ODCB0	xxxx

Legend: x = unknown value on Reset, — = unimplemented, read as '0'. Reset values are shown in hexadecimal

Preliminary

© 2007 Microchip Technology Inc.

查询"DSPIC33FJ12MC02ESP"供应商

TABLE 3-23: SYSTEM CONTROL REGISTER MAP

File Name	Addr	Bit 15	Bit 14	Bit 13	Bit 12	Bit 11	Bit 10	Bit 9	Bit 8	Bit 7	Bit 6	Bit 5	Bit 4	Bit 3	Bit 2	Bit 1	Bit 0	All Resets
RCON	0740	TRAPR	IOPUWR	—	—	—	—	CM	VREGS	EXTR	SWR	SWDTEN	WDTO	SLEEP	IDLE	BOR	POR	xxxx(1)
OSCCON	0742	—	COSC<2:0>			—	NOSC<2:0>			CLKLOCK	IOLOCK	LOCK	—	CF	—	LPOSCEN	OSWEN	0300(2)
CLKDIV	0744	ROI	DOZE<2:0>			DOZEN	FRCDIV<2:0>			PLLPOST<1:0>		—	PLLPRE<4:0>					0040
PLLFBD	0746	—	—	—	—	—	—	—	PLLDIV<8:0>									0030
OSCTUN	0748	—	—	—	—	—	—	—	—	—	—	TUN<5:0>						0000

Legend: x = unknown value on Reset, — = unimplemented, read as '0'. Reset values are shown in hexadecimal.
Note 1: RCON register Reset values dependent on type of Reset.
2: OSCCON register Reset values dependent on the FOSC Configuration bits and by type of Reset.

TABLE 3-24: NVM REGISTER MAP

File Name	Addr	Bit 15	Bit 14	Bit 13	Bit 12	Bit 11	Bit 10	Bit 9	Bit 8	Bit 7	Bit 6	Bit 5	Bit 4	Bit 3	Bit 2	Bit 1	Bit 0	All Resets
NVMCON	0760	WR	WREN	WRERR	—	—	—	—	—	—	ERASE	—	—	NVMOP<3:0>				0000(1)
NVMKEY	0766	—	—	—	—	—	—	—	—	NVMKEY<7:0>								0000

Legend: x = unknown value on Reset, — = unimplemented, read as '0'. Reset values are shown in hexadecimal.
Note 1: Reset value shown is for POR only. Value on other Reset states is dependent on the state of memory write or erase operations at the time of Reset.

TABLE 3-25: PMD REGISTER MAP

File Name	Addr	Bit 15	Bit 14	Bit 13	Bit 12	Bit 11	Bit 10	Bit 9	Bit 8	Bit 7	Bit 6	Bit 5	Bit 4	Bit 3	Bit 2	Bit 1	Bit 0	All Resets
PMD1	0770	—	—	T3MD	T2MD	T1MD	QEIMD	PWM1MD	—	I2C1MD	—	U1MD	—	SPI1MD	—	—	AD1MD	0000
PMD2	0772	IC8MD	IC7MD	—	—	—	—	IC2MD	IC1MD	—	—	—	—	—	—	OC2MD	OC1MD	0000
PMD3	0774	—	—	—	—	—	—	—	—	—	—	—	PWM2MD	—	—	—	—	0000

Legend: x = unknown value on Reset, — = unimplemented, read as '0'. Reset values are shown in hexadecimal.

查询"DSPIC33FJ12MC02ESP"供应商

3.2.6 SOFTWARE STACK

In addition to its use as a working register, the W15 register in the dsPIC33FJ12MC201/202 devices is also used as a software Stack Pointer. The Stack Pointer always points to the first available free word and grows from lower to higher addresses. It pre-decrements for stack pops and post-increments for stack pushes, as shown in Figure 3-4. For a PC push during any `CALL` instruction, the MSb of the PC is zero-extended before the push, ensuring that the MSb is always clear.

Note:	A PC push during exception processing concatenates the SRL register to the MSb of the PC prior to the push.

The Stack Pointer Limit register (SPLIM) associated with the Stack Pointer sets an upper address boundary for the stack. SPLIM is uninitialized at Reset. As is the case for the Stack Pointer, SPLIM<0> is forced to '0' because all stack operations must be word aligned.

Whenever an EA is generated using W15 as a source or destination pointer, the resulting address is compared with the value in SPLIM. If the contents of the Stack Pointer (W15) and the SPLIM register are equal and a push operation is performed, a stack error trap will not occur. The stack error trap will occur on a subsequent push operation. For example, to cause a stack error trap when the stack grows beyond address 0x2000 in RAM, initialize the SPLIM with the value 0x1FFE.

Similarly, a Stack Pointer underflow (stack error) trap is generated when the Stack Pointer address is found to be less than 0x0800. This prevents the stack from interfering with the Special Function Register (SFR) space.

A write to the SPLIM register should not be immediately followed by an indirect read operation using W15.

FIGURE 3-4: `CALL` STACK FRAME

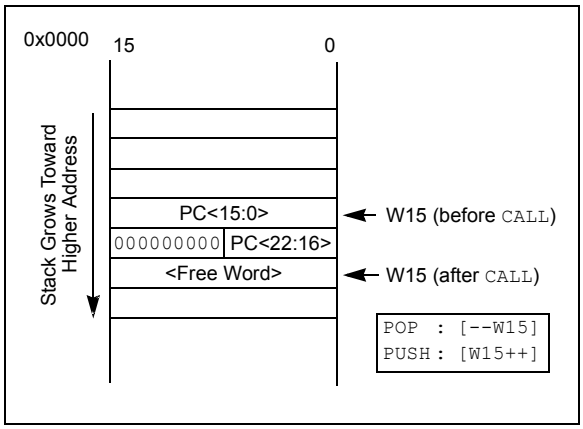

3.2.7 DATA RAM PROTECTION FEATURE

The dsPIC33F product family supports Data RAM protection features that enable segments of RAM to be protected when used in conjunction with Boot and Secure Code Segment Security. BSRAM (Secure RAM segment for BS) is accessible only from the Boot Segment Flash code when enabled. SSRAM (Secure RAM segment for RAM) is accessible only from the Secure Segment Flash code when enabled. See Table 3-1 for an overview of the BSRAM and SSRAM SFRs.

3.3 Instruction Addressing Modes

The addressing modes shown in Table 3-26 form the basis of the addressing modes optimized to support the specific features of individual instructions. The addressing modes provided in the `MAC` class of instructions differ from those in the other instruction types.

3.3.1 FILE REGISTER INSTRUCTIONS

Most file register instructions use a 13-bit address field (f) to directly address data present in the first 8192 bytes of data memory (near data space). Most file register instructions employ a working register, W0, which is denoted as WREG in these instructions. The destination is typically either the same file register or WREG (with the exception of the `MUL` instruction), which writes the result to a register or register pair. The `MOV` instruction allows additional flexibility and can access the entire data space.

3.3.2 MCU INSTRUCTIONS

The three-operand MCU instructions are of the form:

Operand 3 = Operand 1 <function> Operand 2

where Operand 1 is always a working register (that is, the addressing mode can only be register direct), which is referred to as Wb. Operand 2 can be a W register, fetched from data memory, or a 5-bit literal. The result location can be either a W register or a data memory location. The following addressing modes are supported by MCU instructions:

- Register Direct
- Register Indirect
- Register Indirect Post-Modified
- Register Indirect Pre-Modified
- 5-bit or 10-bit Literal

Note:	Not all instructions support all the addressing modes given above. Individual instructions can support different subsets of these addressing modes.

 © 2007 Microchip Technology Inc.

查询"DSPIC33FJ12MC02ESP"供应商

TABLE 3-26: FUNDAMENTAL ADDRESSING MODES SUPPORTED

Addressing Mode	Description
File Register Direct	The address of the file register is specified explicitly.
Register Direct	The contents of a register are accessed directly.
Register Indirect	The contents of Wn forms the Effective Address (EA).
Register Indirect Post-Modified	The contents of Wn forms the EA. Wn is post-modified (incremented or decremented) by a constant value.
Register Indirect Pre-Modified	Wn is pre-modified (incremented or decremented) by a signed constant value to form the EA.
Register Indirect with Register Offset (Register Indexed)	The sum of Wn and Wb forms the EA.
Register Indirect with Literal Offset	The sum of Wn and a literal forms the EA.

3.3.3 MOVE AND ACCUMULATOR INSTRUCTIONS

Move instructions and the DSP accumulator class of instructions provide a greater degree of addressing flexibility than other instructions. In addition to the addressing modes supported by most MCU instructions, move and accumulator instructions also support Register Indirect with Register Offset Addressing mode, also referred to as Register Indexed mode.

> **Note:** For the `MOV` instructions, the addressing mode specified in the instruction can differ for the source and destination EA. However, the 4-bit Wb (Register Offset) field is shared by both source and destination (but typically only used by one).

In summary, the following addressing modes are supported by move and accumulator instructions:

- Register Direct
- Register Indirect
- Register Indirect Post-modified
- Register Indirect Pre-modified
- Register Indirect with Register Offset (Indexed)
- Register Indirect with Literal Offset
- 8-bit Literal
- 16-bit Literal

> **Note:** Not all instructions support all the addressing modes given above. Individual instructions may support different subsets of these addressing modes.

3.3.4 `MAC` INSTRUCTIONS

The dual source operand DSP instructions (`CLR`, `ED`, `EDAC`, `MAC`, `MPY`, `MPY.N`, `MOVSAC` and `MSC`), also referred to as `MAC` instructions, use a simplified set of addressing modes to allow the user application to effectively manipulate the data pointers through register indirect tables.

The two-source operand prefetch registers must be members of the set {W8, W9, W10, W11}. For data reads, W8 and W9 are always directed to the X RAGU, and W10 and W11 are always directed to the Y AGU. The effective addresses generated (before and after modification) must, therefore, be valid addresses within X data space for W8 and W9 and Y data space for W10 and W11.

> **Note:** Register Indirect with Register Offset Addressing mode is available only for W9 (in X space) and W11 (in Y space).

In summary, the following addressing modes are supported by the `MAC` class of instructions:

- Register Indirect
- Register Indirect Post-Modified by 2
- Register Indirect Post-Modified by 4
- Register Indirect Post-Modified by 6
- Register Indirect with Register Offset (Indexed)

3.3.5 OTHER INSTRUCTIONS

Besides the addressing modes outlined previously, some instructions use literal constants of various sizes. For example, `BRA` (branch) instructions use 16-bit signed literals to specify the branch destination directly, whereas the `DISI` instruction uses a 14-bit unsigned literal field. In some instructions, such as `ADD Acc`, the source of an operand or result is implied by the opcode itself. Certain operations, such as `NOP`, do not have any operands.

查询"DSPIC33FJ12MC02ESP"供应商

3.4 Modulo Addressing

Modulo Addressing mode is a method of providing an automated means to support circular data buffers using hardware. The objective is to remove the need for software to perform data address boundary checks when executing tightly looped code, as is typical in many DSP algorithms.

Modulo Addressing can operate in either data or program space (since the data pointer mechanism is essentially the same for both). One circular buffer can be supported in each of the X (which also provides the pointers into program space) and Y data spaces. Modulo Addressing can operate on any W register pointer. However, it is not advisable to use W14 or W15 for Modulo Addressing since these two registers are used as the Stack Frame Pointer and Stack Pointer, respectively.

In general, any particular circular buffer can be configured to operate in only one direction as there are certain restrictions on the buffer start address (for incrementing buffers), or end address (for decrementing buffers), based upon the direction of the buffer.

The only exception to the usage restrictions is for buffers that have a power-of-two length. As these buffers satisfy the start and end address criteria, they can operate in a bidirectional mode (that is, address boundary checks are performed on both the lower and upper address boundaries).

3.4.1 START AND END ADDRESS

The Modulo Addressing scheme requires that a starting and ending address be specified and loaded into the 16-bit Modulo Buffer Address registers: XMODSRT, XMODEND, YMODSRT and YMODEND (see Table 3-1).

Note:	Y space Modulo Addressing EA calculations assume word-sized data (LSb of every EA is always clear).

The length of a circular buffer is not directly specified. It is determined by the difference between the corresponding start and end addresses. The maximum possible length of the circular buffer is 32K words (64 Kbytes).

3.4.2 W ADDRESS REGISTER SELECTION

The Modulo and Bit-Reversed Addressing Control register, MODCON<15:0>, contains enable flags as well as a W register field to specify the W Address registers. The XWM and YWM fields select the registers that will operate with Modulo Addressing:

- If XWM = `15`, X RAGU and X WAGU Modulo Addressing is disabled.
- If YWM = `15`, Y AGU Modulo Addressing is disabled.

The X Address Space Pointer W register (XWM), to which Modulo Addressing is to be applied, is stored in MODCON<3:0> (see Table 3-1). Modulo Addressing is enabled for X data space when XWM is set to any value other than '`15`' and the XMODEN bit is set at MODCON<15>.

The Y Address Space Pointer W register (YWM) to which Modulo Addressing is to be applied is stored in MODCON<7:4>. Modulo Addressing is enabled for Y data space when YWM is set to any value other than '`15`' and the YMODEN bit is set at MODCON<14>.

FIGURE 3-5: MODULO ADDRESSING OPERATION EXAMPLE

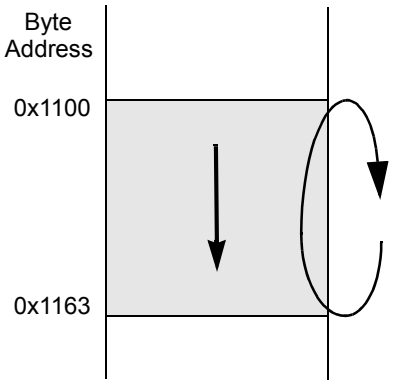


```
MOV     #0x1100, W0
MOV     W0, XMODSRT     ;set modulo start address
MOV     #0x1163, W0
MOV     W0, MODEND      ;set modulo end address
MOV     #0x8001, W0
MOV     W0, MODCON      ;enable W1, X AGU for modulo

MOV     #0x0000, W0     ;W0 holds buffer fill value

MOV     #0x1110, W1     ;point W1 to buffer

DO      AGAIN, #0x31    ;fill the 50 buffer locations
MOV     W0, [W1++]      ;fill the next location
AGAIN:  INC  W0, W0     ;increment the fill value
```

Start Addr = 0x1100
End Addr = 0x1163
Length = 0x0032 words

 © 2007 Microchip Technology Inc.

查询"DSPIC33FJ12MC02ESP"供应商

3.4.3 MODULO ADDRESSING APPLICABILITY

Modulo Addressing can be applied to the Effective Address (EA) calculation associated with any W register. Address boundaries check for addresses equal to:

- The upper boundary addresses for incrementing buffers
- The lower boundary addresses for decrementing buffers

It is important to realize that the address boundaries check for addresses less than or greater than the upper (for incrementing buffers) and lower (for decrementing buffers) boundary addresses (not just equal to). Address changes can, therefore, jump beyond boundaries and still be adjusted correctly.

Note:	The modulo corrected effective address is written back to the register only when Pre-Modify or Post-Modify Addressing mode is used to compute the effective address. When an address offset (such as [W7 + W2]) is used, Modulo Address correction is performed but the contents of the register remain unchanged.

3.5 Bit-Reversed Addressing

Bit-Reversed Addressing mode is intended to simplify data re-ordering for radix-2 FFT algorithms. It is supported by the X AGU for data writes only.

The modifier, which can be a constant value or register contents, is regarded as having its bit order reversed. The address source and destination are kept in normal order. Thus, the only operand requiring reversal is the modifier.

3.5.1 BIT-REVERSED ADDRESSING IMPLEMENTATION

Bit-Reversed Addressing mode is enabled in any of these situations:

- BWM bits (W register selection) in the MODCON register are any value other than '`15`' (the stack cannot be accessed using Bit-Reversed Addressing)
- The BREN bit is set in the XBREV register
- The addressing mode used is Register Indirect with Pre-Increment or Post-Increment

If the length of a bit-reversed buffer is $M = 2^N$ bytes, the last 'N' bits of the data buffer start address must be zeros.

XB<14:0> is the Bit-Reversed Address modifier, or 'pivot point,' which is typically a constant. In the case of an FFT computation, its value is equal to half of the FFT data buffer size.

Note:	All bit-reversed EA calculations assume word-sized data (LSb of every EA is always clear). The XB value is scaled accordingly to generate compatible (byte) addresses.

When enabled, Bit-Reversed Addressing is executed only for Register Indirect with Pre-Increment or Post-Increment Addressing and word-sized data writes. It will not function for any other addressing mode or for byte-sized data, and normal addresses are generated instead. When Bit-Reversed Addressing is active, the W Address Pointer is always added to the address modifier (XB), and the offset associated with the Register Indirect Addressing mode is ignored. In addition, as word-sized data is a requirement, the LSb of the EA is ignored (and always clear).

Note:	Modulo Addressing and Bit-Reversed Addressing should not be enabled together. If an application attempts to do so, Bit-Reversed Addressing will assume priority when active for the X WAGU and X WAGU, Modulo Addressing will be disabled. However, Modulo Addressing will continue to function in the X RAGU.

If Bit-Reversed Addressing has already been enabled by setting the BREN (XBREV<15>) bit, a write to the XBREV register should not be immediately followed by an indirect read operation using the W register that has been designated as the bit-reversed pointer.

查询"DSPIC33FJ12MC02ESP"供应商

FIGURE 3-6: BIT-REVERSED ADDRESS EXAMPLE

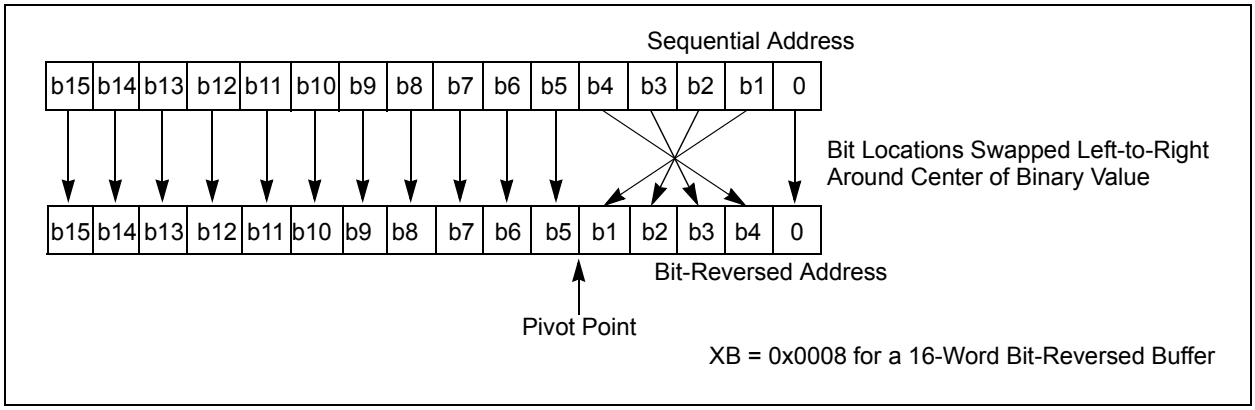

TABLE 3-27: BIT-REVERSED ADDRESS SEQUENCE (16-ENTRY)

Normal Address					Bit-Reversed Address				
A3	A2	A1	A0	Decimal	A3	A2	A1	A0	Decimal
0	0	0	0	0	0	0	0	0	0
0	0	0	1	1	1	0	0	0	8
0	0	1	0	2	0	1	0	0	4
0	0	1	1	3	1	1	0	0	12
0	1	0	0	4	0	0	1	0	2
0	1	0	1	5	1	0	1	0	10
0	1	1	0	6	0	1	1	0	6
0	1	1	1	7	1	1	1	0	14
1	0	0	0	8	0	0	0	1	1
1	0	0	1	9	1	0	0	1	9
1	0	1	0	10	0	1	0	1	5
1	0	1	1	11	1	1	0	1	13
1	1	0	0	12	0	0	1	1	3
1	1	0	1	13	1	0	1	1	11
1	1	1	0	14	0	1	1	1	7
1	1	1	1	15	1	1	1	1	15

 © 2007 Microchip Technology Inc.

查询"DSPIC33FJ12MC02ESP"供应商

3.6 Interfacing Program and Data Memory Spaces

The dsPIC33FJ12MC201/202 architecture uses a 24-bit-wide program space and a 16-bit-wide data space. The architecture is also a modified Harvard scheme, meaning that data can also be present in the program space. To use this data successfully, it must be accessed in a way that preserves the alignment of information in both spaces.

Aside from normal execution, the dsPIC33FJ12MC201/202 architecture provides two methods by which program space can be accessed during operation:

- Using table instructions to access individual bytes or words anywhere in the program space
- Remapping a portion of the program space into the data space (Program Space Visibility)

Table instructions allow an application to read or write to small areas of the program memory. This capability makes the method ideal for accessing data tables that need to be updated periodically. It also allows access to all bytes of the program word. The remapping method allows an application to access a large block of data on a read-only basis, which is ideal for look-ups from a large table of static data. The application can only access the least significant word of the program word.

3.6.1 ADDRESSING PROGRAM SPACE

Since the address ranges for the data and program spaces are 16 and 24 bits, respectively, a method is needed to create a 23-bit or 24-bit program address from 16-bit data registers. The solution depends on the interface method to be used.

For table operations, the 8-bit Table Page register (TBLPAG) is used to define a 32K word region within the program space. This is concatenated with a 16-bit EA to arrive at a full 24-bit program space address. In this format, the Most Significant bit of TBLPAG is used to determine if the operation occurs in the user memory (TBLPAG<7> = 0) or the configuration memory (TBLPAG<7> = 1).

For remapping operations, the 8-bit Program Space Visibility register (PSVPAG) is used to define a 16K word page in the program space. When the Most Significant bit of the EA is '1', PSVPAG is concatenated with the lower 15 bits of the EA to form a 23-bit program space address. Unlike table operations, this limits remapping operations strictly to the user memory area.

Table 3-28 and Figure 3-7 show how the program EA is created for table operations and remapping accesses from the data EA. Here, P<23:0> refers to a program space word, and D<15:0> refers to a data space word.

TABLE 3-28: PROGRAM SPACE ADDRESS CONSTRUCTION

Access Type	Access Space	Program Space Address				
		<23>	<22:16>	<15>	<14:1>	<0>
Instruction Access (Code Execution)	User	0	PC<22:1>			0
		0xx xxxx xxxx xxxx xxxx xxx0				
TBLRD/TBLWT (Byte/Word Read/Write)	User	TBLPAG<7:0>		Data EA<15:0>		
		0xxx xxxx		xxxx xxxx xxxx xxxx		
	Configuration	TBLPAG<7:0>		Data EA<15:0>		
		1xxx xxxx		xxxx xxxx xxxx xxxx		
Program Space Visibility (Block Remap/Read)	User	0	PSVPAG<7:0>		Data EA<14:0>(1)	
		0	xxxx xxxx		xxx xxxx xxxx xxxx	

Note 1: Data EA<15> is always '1' in this case, but is not used in calculating the program space address. Bit 15 of the address is PSVPAG<0>.

查询"DSPIC33FJ12MC02ESP"供应商

FIGURE 3-7: DATA ACCESS FROM PROGRAM SPACE ADDRESS GENERATION

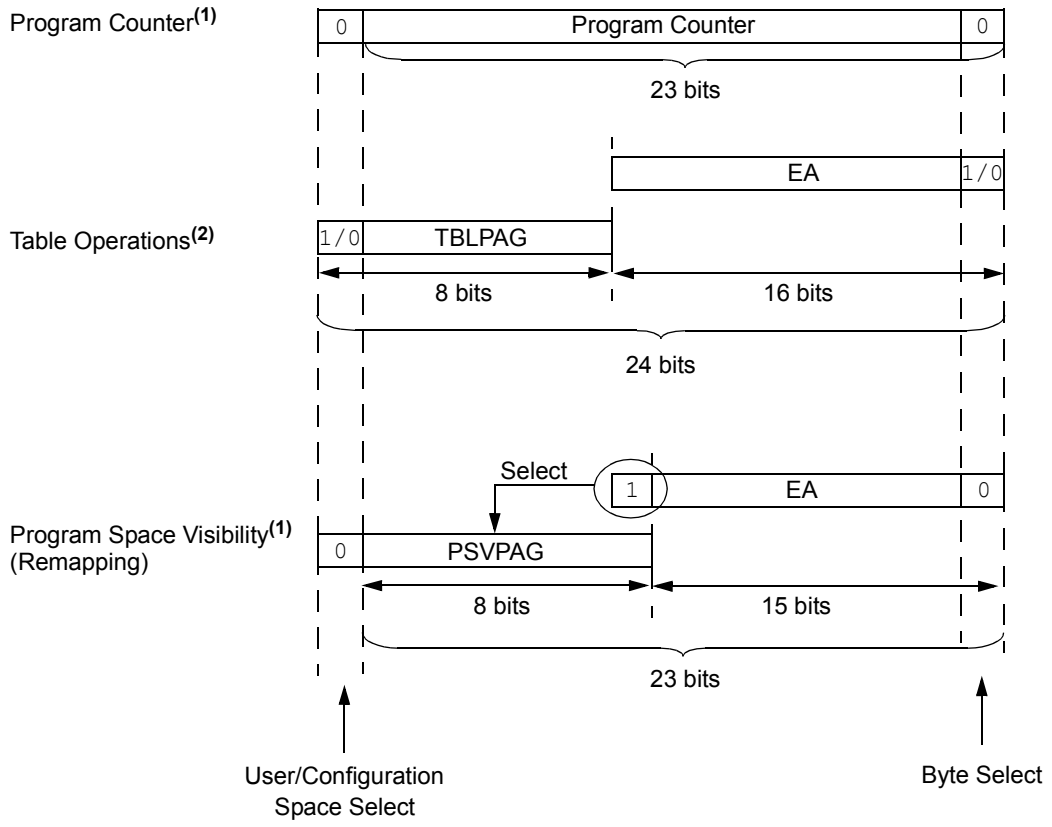

Note 1: The Least Significant bit (LSb) of program space addresses is always fixed as '0' to maintain word alignment of data in the program and data spaces.

2: Table operations are not required to be word aligned. Table read operations are permitted in the configuration memory space.

 © 2007 Microchip Technology Inc.

查询"DSPIC33FJ12MC02ESP"供应商

3.6.2 DATA ACCESS FROM PROGRAM MEMORY USING TABLE INSTRUCTIONS

The TBLRDL and TBLWTL instructions offer a direct method of reading or writing the lower word of any address within the program space without going through data space. The TBLRDH and TBLWTH instructions are the only method to read or write the upper 8 bits of a program space word as data.

The PC is incremented by two for each successive 24-bit program word. This allows program memory addresses to directly map to data space addresses. Program memory can thus be regarded as two 16-bit-wide word address spaces, residing side by side, each with the same address range. TBLRDL and TBLWTL access the space that contains the least significant data word. TBLRDH and TBLWTH access the space that contains the upper data byte.

Two table instructions are provided to move byte or word-sized (16-bit) data to and from program space. Both function as either byte or word operations.

- TBLRDL (Table Read Low):
  - In Word mode, this instruction maps the lower word of the program space location (P<15:0>) to a data address (D<15:0>).
  - In Byte mode, either the upper or lower byte of the lower program word is mapped to the lower byte of a data address. The upper byte is selected when Byte Select is '1'; the lower byte is selected when it is '0'.
- TBLRDH (Table Read High):
  - In Word mode, this instruction maps the entire upper word of a program address (P<23:16>) to a data address. Note that D<15:8>, the 'phantom byte', will always be '0'.
  - In Byte mode, this instruction maps the upper or lower byte of the program word to D<7:0> of the data address, in the TBLRDL instruction. The data is always '0' when the upper 'phantom' byte is selected (Byte Select = 1).

In a similar fashion, two table instructions, TBLWTH and TBLWTL, are used to write individual bytes or words to a program space address. The details of their operation are explained in **Section 4.0 "Flash Program Memory"**.

For all table operations, the area of program memory space to be accessed is determined by the Table Page register (TBLPAG). TBLPAG covers the entire program memory space of the device, including user and configuration spaces. When TBLPAG<7> = 0, the table page is located in the user memory space. When TBLPAG<7> = 1, the page is located in configuration space.

FIGURE 3-8: ACCESSING PROGRAM MEMORY WITH TABLE INSTRUCTIONS

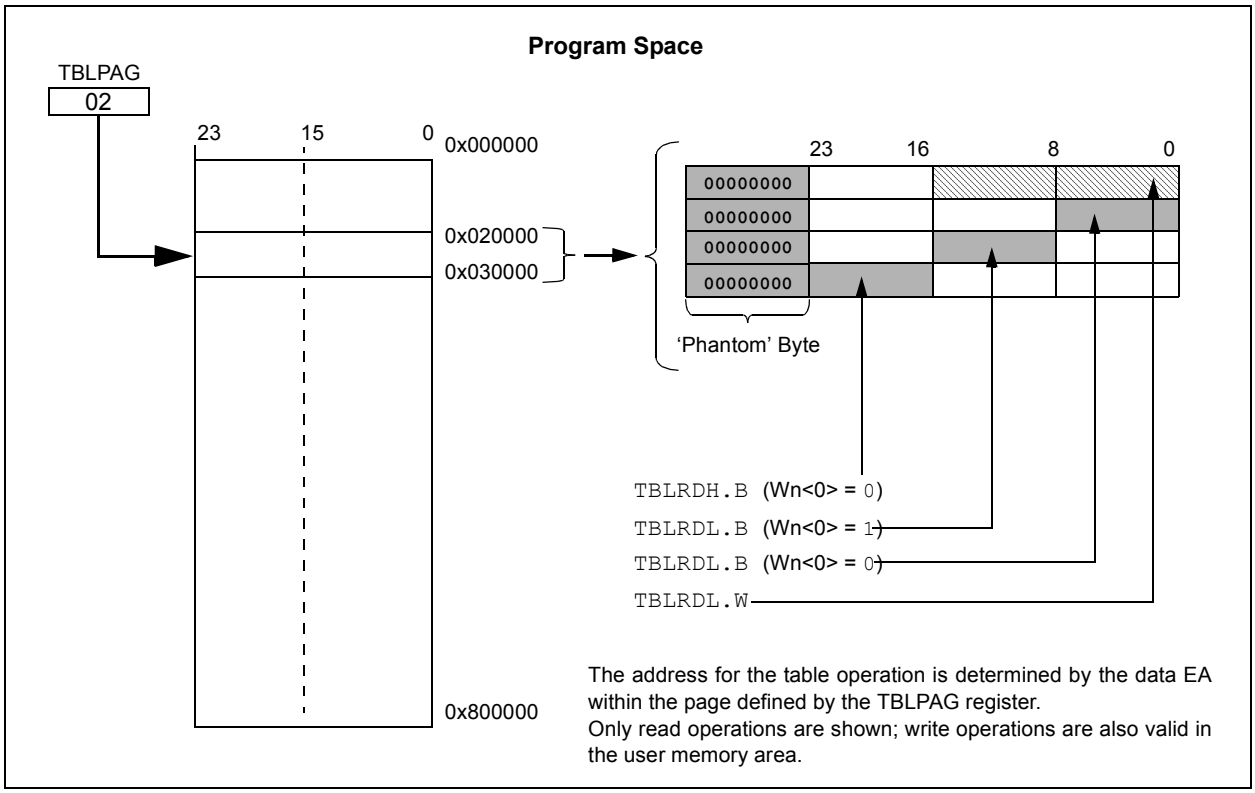

查询"DSPIC33FJ12MC02ESP"供应商

3.6.3 READING DATA FROM PROGRAM MEMORY USING PROGRAM SPACE VISIBILITY

The upper 32 Kbytes of data space may optionally be mapped into any 16K word page of the program space. This option provides transparent access to stored constant data from the data space without the need to use special instructions (such as TBLRDL/H).

Program space access through the data space occurs if the Most Significant bit of the data space EA is '1' and program space visibility is enabled by setting the PSV bit in the Core Control register (CORCON<2>). The location of the program memory space to be mapped into the data space is determined by the Program Space Visibility Page register (PSVPAG). This 8-bit register defines any one of 256 possible pages of 16K words in program space. In effect, PSVPAG functions as the upper 8 bits of the program memory address, with the 15 bits of the EA functioning as the lower bits. By incrementing the PC by 2 for each program memory word, the lower 15 bits of data space addresses directly map to the lower 15 bits in the corresponding program space addresses.

Data reads to this area add a cycle to the instruction being executed, since two program memory fetches are required.

Although each data space address 8000h and higher maps directly into a corresponding program memory address (see Figure 3-9), only the lower 16 bits of the 24-bit program word are used to contain the data. The upper 8 bits of any program space location used as data should be programmed with '1111 1111' or '0000 0000' to force a NOP. This prevents possible issues should the area of code ever be accidentally executed.

Note:	PSV access is temporarily disabled during table reads/writes.

For operations that use PSV and are executed outside a REPEAT loop, the MOV and MOV.D instructions require one instruction cycle in addition to the specified execution time. All other instructions require two instruction cycles in addition to the specified execution time.

For operations that use PSV, and are executed inside a REPEAT loop, these instances require two instruction cycles in addition to the specified execution time of the instruction:

- Execution in the first iteration
- Execution in the last iteration
- Execution prior to exiting the loop due to an interrupt
- Execution upon re-entering the loop after an interrupt is serviced

Any other iteration of the REPEAT loop will allow the instruction using PSV to access data, to execute in a single cycle.

FIGURE 3-9: PROGRAM SPACE VISIBILITY OPERATION

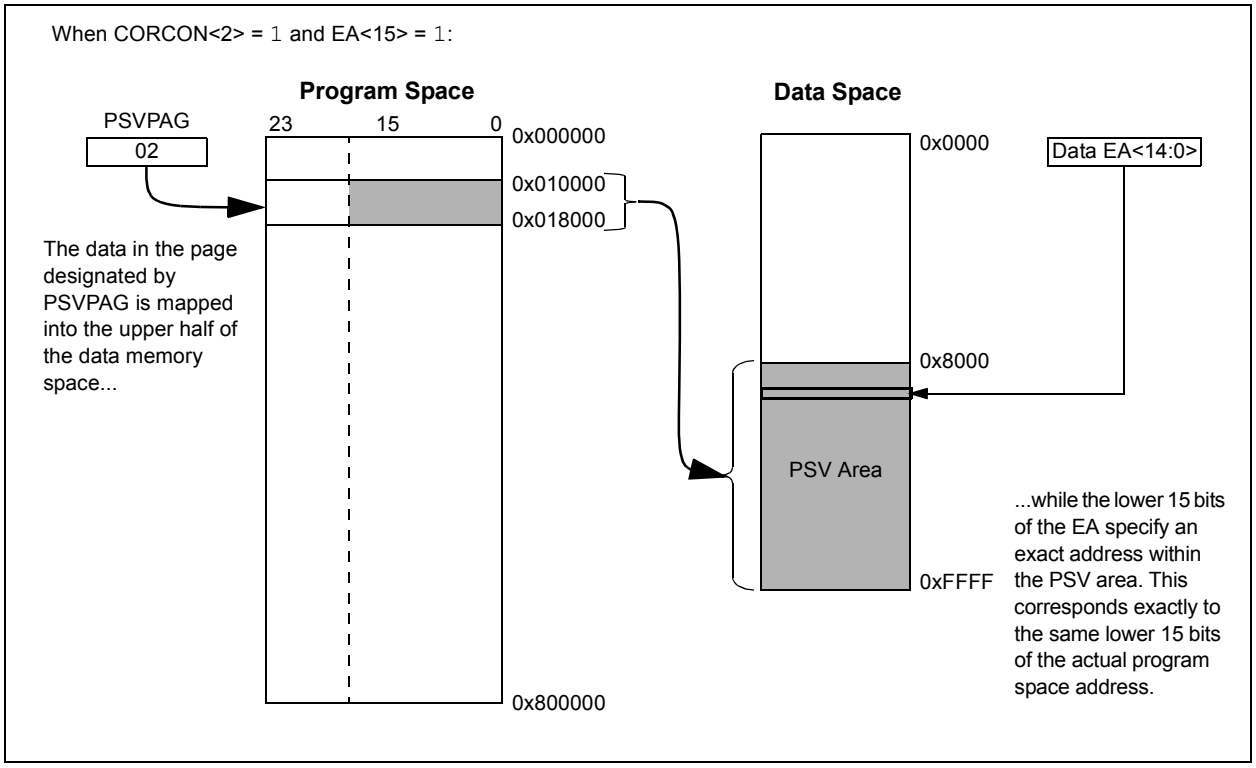

 © 2007 Microchip Technology Inc.

查询"DSPIC33FJ12MC02ESP"供应商

4.0 FLASH PROGRAM MEMORY

Note:	This data sheet summarizes the features of the dsPIC33FJ12MC201/202 devices. It is not intended to be a comprehensive reference source. To complement the information in this data sheet, refer to the *"dsPIC33F Family Reference Manual"*. Please see the Microchip web site (www.microchip.com) for the latest dsPIC33F Family Reference Manual chapters.

The dsPIC33FJ12MC201/202 devices contain internal Flash program memory for storing and executing application code. The memory is readable, writable and erasable during normal operation over the entire VDD range.

Flash memory can be programmed in two ways:

- In-Circuit Serial Programming™ (ICSP™) programming capability
- Run-Time Self-Programming (RTSP)

ICSP allows a dsPIC33FJ12MC201/202 device to be serially programmed while in the end application circuit. This is done with two lines for programming clock and programming data (one of the alternate programming pin pairs: PGC1/PGD1, PGC2/PGD2 or PGC3/PGD3), and three other lines for power (VDD), ground (VSS) and Master Clear (MCLR). This allows customers to manufacture boards with unprogrammed devices and then program the digital signal controller just before shipping the product. This also allows the most recent firmware or a custom firmware to be programmed.

RTSP is accomplished using TBLRD (table read) and TBLWT (table write) instructions. With RTSP, the user application can write program memory data either in blocks or 'rows' of 64 instructions (192 bytes) at a time or a single program memory word, and erase program memory in blocks or 'pages' of 512 instructions (1536 bytes) at a time.

4.1 Table Instructions and Flash Programming

Regardless of the method used, all programming of Flash memory is done with the table read and table write instructions. These allow direct read and write access to the program memory space from the data memory while the device is in normal operating mode. The 24-bit target address in the program memory is formed using bits <7:0> of the TBLPAG register and the Effective Address (EA) from a W register specified in the table instruction, as shown in Figure 4-1.

The TBLRDL and the TBLWTL instructions are used to read or write to bits <15:0> of program memory. TBLRDL and TBLWTL can access program memory in both Word and Byte modes.

The TBLRDH and TBLWTH instructions are used to read or write to bits <23:16> of program memory. TBLRDH and TBLWTH can also access program memory in Word or Byte mode.

FIGURE 4-1: ADDRESSING FOR TABLE REGISTERS

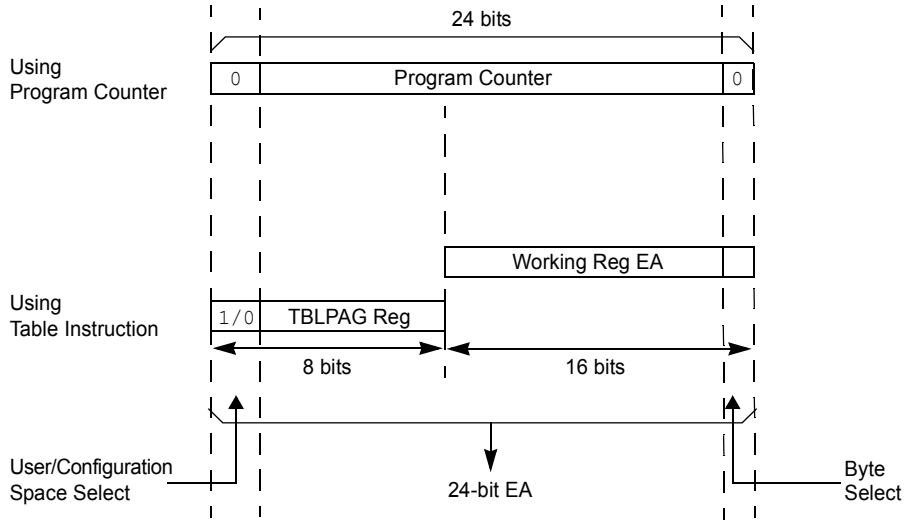

查询"DSPIC33FJ12MC02ESP"供应商

4.2 RTSP Operation

The dsPIC33FJ12MC201/202 Flash program memory array is organized into rows of 64 instructions or 192 bytes. RTSP allows the user application to erase a page of memory, which consists of eight rows (512 instructions) at a time, and to program one row or one word at a time. Table 23-12 shows typical erase and programming times. The 8-row erase pages and single row write rows are edge-aligned from the beginning of program memory, on boundaries of 1536 bytes and 192 bytes, respectively.

The program memory implements holding buffers that can contain 64 instructions of programming data. Prior to the actual programming operation, the write data must be loaded into the buffers sequentially. The instruction words loaded must always be from a group of 64 boundary.

The basic sequence for RTSP programming is to set up a Table Pointer, then do a series of `TBLWT` instructions to load the buffers. Programming is performed by setting the control bits in the NVMCON register. A total of 64 `TBLWTL` and `TBLWTH` instructions are required to load the instructions.

All of the table write operations are single-word writes (two instruction cycles) because only the buffers are written. A programming cycle is required for programming each row.

4.3 Control Registers

Two SFRs are used to read and write the program Flash memory: NVMCON and NVMKEY.

The NVMCON register (Register 4-1) controls which blocks are to be erased, which memory type is to be programmed and the start of the programming cycle.

NVMKEY is a write-only register that is used for write protection. To start a programming or erase sequence, the user application must consecutively write 0x55 and 0xAA to the NVMKEY register. Refer to **Section 4.4 “Programming Operations”** for further details.

4.4 Programming Operations

A complete programming sequence is necessary for programming or erasing the internal Flash in RTSP mode. A programming operation is nominally 4 ms in duration and the processor stalls (waits) until the operation is finished. Setting the WR bit (NVMCON<15>) starts the operation, and the WR bit is automatically cleared when the operation is finished.

 © 2007 Microchip Technology Inc.

查询"DSPIC33FJ12MC02ESP"供应商

REGISTER 4-1: NVMCON: FLASH MEMORY CONTROL REGISTER

R/SO-0(1)	R/W-0(1)	R/W-0(1)	U-0	U-0	U-0	U-0	U-0
WR	WREN	WRERR	—	—	—	—	—
bit 15							bit 8

U-0	R/W-0(1)	U-0	U-0	R/W-0(1)	R/W-0(1)	R/W-0(1)	R/W-0(1)
—	ERASE	—	—	NVMOP<3:0>(2)			
bit 7							bit 0

Legend:	SO = Satiable only bit		
R = Readable bit	W = Writable bit	U = Unimplemented bit, read as ‘0’	
-n = Value at POR	‘1’ = Bit is set	‘0’ = Bit is cleared	x = Bit is unknown

bit 15 **WR:** Write Control bit
- 1 = Initiates a Flash memory program or erase operation. The operation is self-timed and the bit is cleared by hardware once operation is complete
- 0 = Program or erase operation is complete and inactive

bit 14 **WREN:** Write Enable bit
- 1 = Enable Flash program/erase operations
- 0 = Inhibit Flash program/erase operations

bit 13 **WRERR:** Write Sequence Error Flag bit
- 1 = An improper program or erase sequence attempt or termination has occurred (bit is set automatically on any set attempt of the WR bit)
- 0 = The program or erase operation completed normally

bit 12-7 **Unimplemented:** Read as ‘0’

bit 6 **ERASE:** Erase/Program Enable bit
- 1 = Perform the erase operation specified by NVMOP<3:0> on the next WR command
- 0 = Perform the program operation specified by NVMOP<3:0> on the next WR command

bit 5-4 **Unimplemented:** Read as ‘0’

bit 3-0 **NVMOP<3:0>:** NVM Operation Select bits(2)

If ERASE = 1:
- 1111 = Memory bulk erase operation
- 1101 = Erase General Segment
- 1100 = Erase Secure Segment
- 0011 = No operation
- 0010 = Memory page erase operation
- 0001 = No operation
- 0000 = Erase a single Configuration register byte

If ERASE = 0:
- 1111 = No operation
- 1101 = No operation
- 1100 = No operation
- 0011 = Memory word program operation
- 0010 = No operation
- 0001 = Memory row program operation
- 0000 = Program a single Configuration register byte

Note 1: These bits can only be reset on POR.

2: All other combinations of NVMOP<3:0> are unimplemented.

查询"DSPIC33FJ12MC02ESP"供应商

REGISTER 4-2: NVMKEY: NONVOLATILE MEMORY KEY REGISTER

U-0	U-0	U-0	U-0	U-0	U-0	U-0	U-0
—	—	—	—	—	—	—	—
bit 15							bit 8

W-0	W-0	W-0	W-0	W-0	W-0	W-0	W-0
NVMKEY<7:0>							
bit 7							bit 0

Legend:	SO = Satiable only bit		
R = Readable bit	W = Writable bit	U = Unimplemented bit, read as ‘0’	
-n = Value at POR	‘1’ = Bit is set	‘0’ = Bit is cleared	x = Bit is unknown

bit 15-8 **Unimplemented:** Read as ‘0’

bit 7-0 **NVMKEY<7:0>:** Key Register (write-only) bits

 © 2007 Microchip Technology Inc.

查询"DSPIC33FJ12MC02ESP"供应商

4.4.1 PROGRAMMING ALGORITHM FOR FLASH PROGRAM MEMORY

Programmers can program one row of program Flash memory at a time. To do this, it is necessary to erase the 8-row erase page that contains the desired row. The general process is:

1. Read eight rows of program memory (512 instructions) and store in data RAM.
2. Update the program data in RAM with the desired new data.
3. Erase the block (see Example 4-1):
   a) Set the NVMOP bits (NVMCON<3:0>) to '0010' to configure for block erase. Set the ERASE (NVMCON<6>) and WREN (NVMCON<14>) bits.
   b) Write the starting address of the page to be erased into the TBLPAG and W registers.
   c) Write 0x55 to NVMKEY.
   d) Write 0xAA to NVMKEY.
   e) Set the WR bit (NVMCON<15>). The erase cycle begins and the CPU stalls for the duration of the erase cycle. When the erase is done, the WR bit is cleared automatically.
4. Write the first 64 instructions from data RAM into the program memory buffers (see Example 4-2).
5. Write the program block to Flash memory:
   a) Set the NVMOP bits to '0001' to configure for row programming. Clear the ERASE bit and set the WREN bit.
   b) Write 0x55 to NVMKEY.
   c) Write 0xAA to NVMKEY.
   d) Set the WR bit. The programming cycle begins and the CPU stalls for the duration of the write cycle. When the write to Flash memory is done, the WR bit is cleared automatically.
6. Repeat steps 4 and 5, using the next available 64 instructions from the block in data RAM by incrementing the value in TBLPAG, until all 512 instructions are written back to Flash memory.

For protection against accidental operations, the write initiate sequence for NVMKEY must be used to allow any erase or program operation to proceed. After the programming command has been executed, the user application must wait for the programming time until programming is complete. The two instructions following the start of the programming sequence should be NOPs, as shown in Example 4-3.

EXAMPLE 4-1: ERASING A PROGRAM MEMORY PAGE

```
; Set up NVMCON for block erase operation
        MOV     #0x4042, W0                 ;
        MOV     W0, NVMCON                  ; Initialize NVMCON
; Init pointer to row to be ERASED
        MOV     #tblpage(PROG_ADDR), W0     ;
        MOV     W0, TBLPAG                  ; Initialize PM Page Boundary SFR
        MOV     #tbloffset(PROG_ADDR), W0   ; Initialize in-page EA[15:0] pointer
        TBLWTL  W0, [W0]                    ; Set base address of erase block
        DISI    #5                          ; Block all interrupts with priority <7
                                            ; for next 5 instructions
        MOV     #0x55, W0
        MOV     W0, NVMKEY                  ; Write the 55 key
        MOV     #0xAA, W1                   ;
        MOV     W1, NVMKEY                  ; Write the AA key
        BSET    NVMCON, #WR                 ; Start the erase sequence
        NOP                                 ; Insert two NOPs after the erase
        NOP                                 ; command is asserted
```

查询"DSPIC33FJ12MC02ESP"供应商

EXAMPLE 4-2: LOADING THE WRITE BUFFERS

```
; Set up NVMCON for row programming operations
        MOV     #0x4001, W0                ;
        MOV     W0, NVMCON                 ; Initialize NVMCON
; Set up a pointer to the first program memory location to be written
; program memory selected, and writes enabled
        MOV     #0x0000, W0                ;
        MOV     W0, TBLPAG                 ; Initialize PM Page Boundary SFR
        MOV     #0x6000, W0                ; An example program memory address
; Perform the TBLWT instructions to write the latches
; 0th_program_word
        MOV     #LOW_WORD_0, W2            ;
        MOV     #HIGH_BYTE_0, W3           ;
        TBLWTL  W2, [W0]                   ; Write PM low word into program latch
        TBLWTH  W3, [W0++]                 ; Write PM high byte into program latch
; 1st_program_word
        MOV     #LOW_WORD_1, W2            ;
        MOV     #HIGH_BYTE_1, W3           ;
        TBLWTL  W2, [W0]                   ; Write PM low word into program latch
        TBLWTH  W3, [W0++]                 ; Write PM high byte into program latch
;  2nd_program_word
        MOV     #LOW_WORD_2, W2            ;
        MOV     #HIGH_BYTE_2, W3           ;
        TBLWTL  W2, [W0]                   ; Write PM low word into program latch
        TBLWTH  W3, [W0++]                 ; Write PM high byte into program latch
        •
        •
        •
; 63rd_program_word
        MOV     #LOW_WORD_31, W2           ;
        MOV     #HIGH_BYTE_31, W3          ;
        TBLWTL  W2, [W0]                   ; Write PM low word into program latch
        TBLWTH  W3, [W0++]                 ; Write PM high byte into program latch
```

EXAMPLE 4-3: INITIATING A PROGRAMMING SEQUENCE

```
        DISI    #5                         ; Block all interrupts with priority <7
                                           ; for next 5 instructions
        MOV     #0x55, W0
        MOV     W0, NVMKEY                 ; Write the 55 key
        MOV     #0xAA, W1                  ;
        MOV     W1, NVMKEY                 ; Write the AA key
        BSET    NVMCON, #WR                ; Start the erase sequence
        NOP                                ; Insert two NOPs after the
        NOP                                ; erase command is asserted
```

 © 2007 Microchip Technology Inc.

查询"DSPIC33FJ12MC02ESP"供应商

5.0 RESETS

Note:	This data sheet summarizes the features of the dsPIC33FJ12MC201/202 devices. It is not intended to be a comprehensive reference source. To complement the information in this data sheet, refer to the *"dsPIC33F Family Reference Manual"*. Please see the Microchip web site (www.microchip.com) for the latest dsPIC33F Family Reference Manual chapters.

The Reset module combines all Reset sources and controls the device Master Reset Signal, $\overline{\text{SYSRST}}$. The following is a list of device Reset sources:

- POR: Power-on Reset
- BOR: Brown-out Reset
- $\overline{\text{MCLR}}$: Master Clear Pin Reset
- SWR: `RESET` Instruction
- WDTO: Watchdog Timer Reset
- TRAPR: Trap Conflict Reset
- IOPUWR: Illegal Opcode, Uninitialized W Register Reset and Security Reset
- CM: Configuration Mismatch Reset

A simplified block diagram of the Reset module is shown in Figure 5-1.

Any active source of Reset makes the $\overline{\text{SYSRST}}$ signal active. Many registers associated with the CPU and peripherals are forced to a known Reset state. Most registers are unaffected by a Reset; their status is unknown on POR and unchanged by all other Resets.

Note:	Refer to the specific peripheral or CPU section of this manual for register Reset states.

All types of device Reset will set a corresponding status bit in the RCON register to indicate the type of Reset (see Register 5-1). A POR will clear all bits, except for the POR bit (RCON<0>), that are set. The user application can set or clear any bit at any time during code execution. The RCON bits only serve as status bits. Setting a particular Reset status bit in software does not cause a device Reset to occur.

The RCON register also has other bits associated with the Watchdog Timer and device power-saving states. The function of these bits is discussed in other sections of this manual.

Note:	The status bits in the RCON register should be cleared after they are read so that the next RCON register value after a device Reset will be meaningful.

FIGURE 5-1: RESET SYSTEM BLOCK DIAGRAM

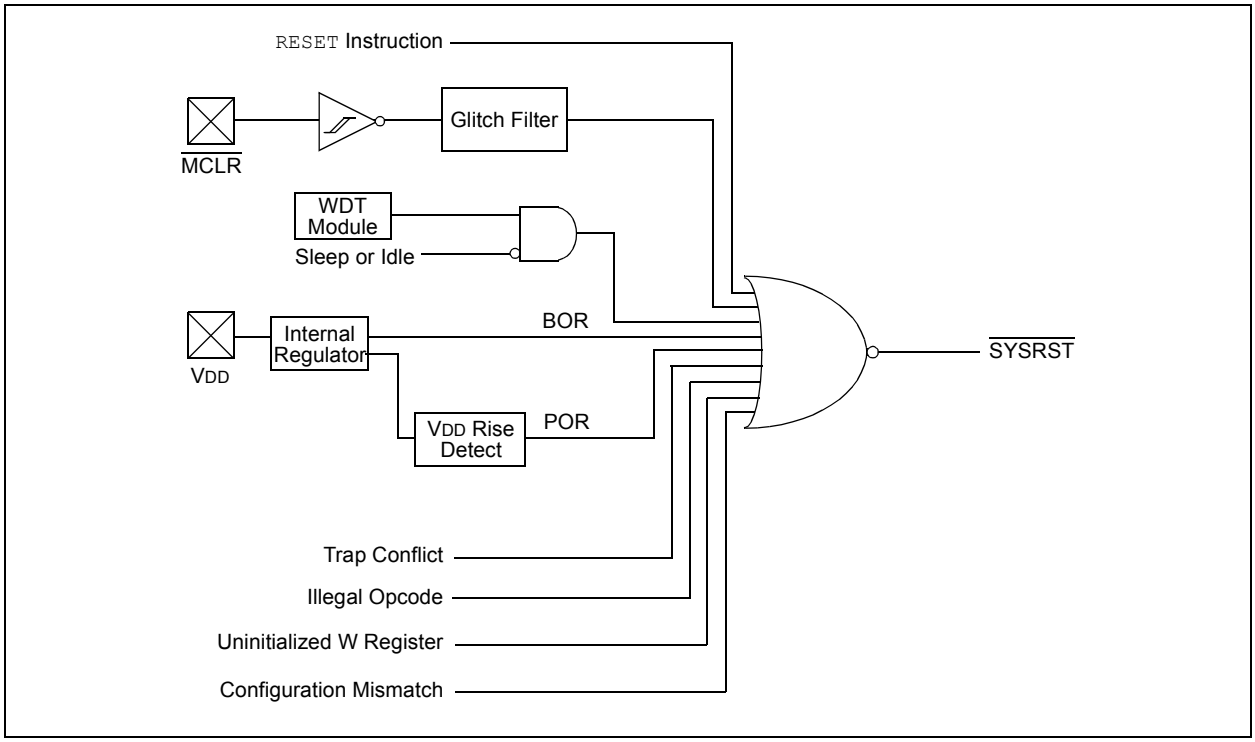

查询"DSPIC33FJ12MC02ESP"供应商

REGISTER 5-1: RCON: RESET CONTROL REGISTER(1)

R/W-0	R/W-0	U-0	U-0	U-0	U-0	R/W-0	R/W-0
TRAPR	IOPUWR	—	—	—	—	CM	VREGS
bit 15							bit 8

R/W-0	R/W-0	R/W-0	R/W-0	R/W-0	R/W-0	R/W-1	R/W-1
EXTR	SWR	SWDTEN(2)	WDTO	SLEEP	IDLE	BOR	POR
bit 7							bit 0

Legend:			
R = Readable bit	W = Writable bit	U = Unimplemented bit, read as ‘0’	
-n = Value at POR	‘1’ = Bit is set	‘0’ = Bit is cleared	x = Bit is unknown

bit 15 **TRAPR:** Trap Reset Flag bit
1 = A Trap Conflict Reset has occurred
0 = A Trap Conflict Reset has not occurred

bit 14 **IOPUWR:** Illegal Opcode or Uninitialized W Access Reset Flag bit
1 = An illegal opcode detection, an illegal address mode or uninitialized W register used as an Address Pointer caused a Reset
0 = An illegal opcode or uninitialized W Reset has not occurred

bit 13-10 **Unimplemented:** Read as ‘0’

bit 9 **CM:** Configuration Mismatch Flag bit
1 = A configuration mismatch Reset has occurred.
0 = A configuration mismatch Reset has NOT occurred.

bit 8 **VREGS:** Voltage Regulator Standby During Sleep bit
1 = Voltage regulator is active during Sleep
0 = Voltage regulator goes into Standby mode during Sleep

bit 7 **EXTR:** External Reset ($\overline{\text{MCLR}}$) Pin bit
1 = A Master Clear (pin) Reset has occurred
0 = A Master Clear (pin) Reset has not occurred

bit 6 **SWR:** Software Reset (Instruction) Flag bit
1 = A RESET instruction has been executed
0 = A RESET instruction has not been executed

bit 5 **SWDTEN:** Software Enable/Disable of WDT bit(2)
1 = WDT is enabled
0 = WDT is disabled

bit 4 **WDTO:** Watchdog Timer Time-out Flag bit
1 = WDT time-out has occurred
0 = WDT time-out has not occurred

bit 3 **SLEEP:** Wake-up from Sleep Flag bit
1 = Device has been in Sleep mode
0 = Device has not been in Sleep mode

bit 2 **IDLE:** Wake-up from Idle Flag bit
1 = Device was in Idle mode
0 = Device was not in Idle mode

Note 1: All of the Reset status bits can be set or cleared in software. Setting one of these bits in software does not cause a device Reset.

2: If the FWDTEN Configuration bit is ‘1’ (unprogrammed), the WDT is always enabled, regardless of the SWDTEN bit setting.

 © 2007 Microchip Technology Inc.

查询"DSPIC33FJ12MC02ESP"供应商

REGISTER 5-1: RCON: RESET CONTROL REGISTER(1) (CONTINUED)

bit 1 **BOR:** Brown-out Reset Flag bit
1 = A Brown-out Reset has occurred
0 = A Brown-out Reset has not occurred

bit 0 **POR:** Power-on Reset Flag bit
1 = A Power-up Reset has occurred
0 = A Power-up Reset has not occurred

Note 1: All of the Reset status bits can be set or cleared in software. Setting one of these bits in software does not cause a device Reset.

2: If the FWDTEN Configuration bit is '1' (unprogrammed), the WDT is always enabled, regardless of the SWDTEN bit setting.

TABLE 5-1: RESET FLAG BIT OPERATION

Flag Bit	Setting Event	Clearing Event
TRAPR (RCON<15>)	Trap conflict event	POR, BOR
IOPUWR (RCON<14>)	Illegal opcode or uninitialized W register access	POR, BOR
CM (RCON<9>)	Configuration mismatch	POR, BOR
EXTR (RCON<7>)	$\overline{\text{MCLR}}$ Reset	POR
SWR (RCON<6>)	RESET instruction	POR, BOR
WDTO (RCON<4>)	WDT time-out	PWRSAV instruction, POR, BOR, CLRWDT instruction
SLEEP (RCON<3>)	PWRSAV #SLEEP instruction	POR, BOR
IDLE (RCON<2>)	PWRSAV #IDLE instruction	POR, BOR
BOR (RCON<1>	BOR	—
POR (RCON<0>)	POR	—

Note: All Reset flag bits can be set or cleared by the user software.

查询"DSPIC33FJ12MC02ESP"供应商

5.1 Clock Source Selection at Reset

If clock switching is enabled, the system clock source at device Reset is chosen as shown in Table 5-2. If clock switching is disabled, the system clock source is always selected according to the oscillator Configuration bits. Refer to **Section 7.0 "Oscillator Configuration"** for further details.

TABLE 5-2: OSCILLATOR SELECTION vs. TYPE OF RESET (CLOCK SWITCHING ENABLED)

Reset Type	Clock Source Determinant
POR	Oscillator Configuration bits (FNOSC<2:0>)
BOR	
$\overline{\text{MCLR}}$	COSC Control bits (OSCCON<14:12>)
WDTR	
SWR	

5.2 Device Reset Times

The Reset times for various types of device Reset are summarized in Table 5-3. The system Reset signal, $\overline{\text{SYSRST}}$, is released after the POR and PWRT delay times expire.

The time at which the device actually begins to execute code also depends on the system oscillator delays, which include the Oscillator Start-up Timer (OST) and the Phase-Locked Loop (PLL) lock time. The OST and PLL lock times occur in parallel with the applicable $\overline{\text{SYSRST}}$ delay times.

The FSCM delay determines the time at which the FSCM begins to monitor the system clock source after the $\overline{\text{SYSRST}}$ signal is released.

TABLE 5-3: RESET DELAY TIMES FOR VARIOUS DEVICE RESETS

Reset Type	Clock Source	$\overline{\text{SYSRST}}$ Delay	System Clock Delay	FSCM Delay	Notes
POR	EC, FRC, LPRC	TPOR + TSTARTUP + TRST	—	—	**1, 2, 3**
	ECPLL, FRCPLL	TPOR + TSTARTUP + TRST	TLOCK	TFSCM	**1, 2, 3, 5, 6**
	XT, HS, SOSC	TPOR + TSTARTUP + TRST	TOST	TFSCM	**1, 2, 3, 4, 6**
	XTPLL, HSPLL	TPOR + TSTARTUP + TRST	TOST + TLOCK	TFSCM	**1, 2, 3, 4, 5, 6**
BOR	EC, FRC, LPRC	TSTARTUP + TRST	—	—	**3**
	ECPLL, FRCPLL	TSTARTUP + TRST	TLOCK	TFSCM	**3, 5, 6**
	XT, HS, SOSC	TSTARTUP + TRST	TOST	TFSCM	**3, 4, 6**
	XTPLL, HSPLL	TSTARTUP + TRST	TOST + TLOCK	TFSCM	**3, 4, 5, 6**
$\overline{\text{MCLR}}$	Any Clock	TRST	—	—	**3**
WDT	Any Clock	TRST	—	—	**3**
Software	Any Clock	TRST	—	—	**3**
Illegal Opcode	Any Clock	TRST	—	—	**3**
Uninitialized W	Any Clock	TRST	—	—	**3**
Trap Conflict	Any Clock	TRST	—	—	**3**

Note 1: TPOR = Power-on Reset delay (10 μs nominal).

2: TSTARTUP = Conditional POR delay of 20 μs nominal (if on-chip regulator is enabled) or 64 ms nominal Power-up Timer delay (if regulator is disabled). TSTARTUP is also applied to all returns from powered-down states, including waking from Sleep mode, only if the regulator is enabled.

3: TRST = Internal state Reset time (20 μs nominal).

4: TOST = Oscillator Start-up Timer. A 10-bit counter counts 1024 oscillator periods before releasing the oscillator clock to the system.

5: TLOCK = PLL lock time (20 μs nominal).

6: TFSCM = Fail-Safe Clock Monitor delay (100 μs nominal).

 © 2007 Microchip Technology Inc.

查询"DSPIC33FJ12MC02ESP"供应商

5.2.1 POR AND LONG OSCILLATOR START-UP TIMES

The oscillator start-up circuitry and its associated delay timers are not linked to the device Reset delays that occur at power-up. Some crystal circuits (especially low-frequency crystals) have a relatively long start-up time. Therefore, one or more of the following conditions is possible after $\overline{\text{SYSRST}}$ is released:

- The oscillator circuit has not begun to oscillate.
- The Oscillator Start-up Timer has not expired (if a crystal oscillator is used).
- The PLL has not achieved a lock (if PLL is used).

The device will not begin to execute code until a valid clock source has been released to the system. Therefore, the oscillator and PLL start-up delays must be considered when the Reset delay time must be known.

5.2.2 FAIL-SAFE CLOCK MONITOR (FSCM) AND DEVICE RESETS

If the FSCM is enabled, it begins to monitor the system clock source when $\overline{\text{SYSRST}}$ is released. If a valid clock source is not available at this time, the device automatically switches to the FRC oscillator and the user application can switch to the desired crystal oscillator in the Trap Service Routine.

5.2.2.1 FSCM Delay for Crystal and PLL Clock Sources

When the system clock source is provided by a crystal oscillator and/or the PLL, a short delay, T_{FSCM}, is automatically inserted after the POR and PWRT delay times. The FSCM does not begin to monitor the system clock source until this delay expires. The FSCM delay time is nominally 500 μs and provides additional time for the oscillator and/or PLL to stabilize. In most cases, the FSCM delay prevents an oscillator failure trap at a device Reset when the PWRT is disabled.

5.3 Special Function Register Reset States

Most of the Special Function Registers (SFRs) associated with the CPU and peripherals are reset to a particular value at a device Reset. The SFRs are grouped by their peripheral or CPU function, and their Reset values are specified in each section of this manual.

The Reset value for each SFR does not depend on the type of Reset, with the exception of two registers:

- The Reset value for the Reset Control register, RCON, depends on the type of device Reset.
- The Reset value for the Oscillator Control register, OSCCON, depends on the type of Reset and the programmed values of the Oscillator Configuration bits in the FOSC Configuration register.

查询"DSPIC33FJ12MC02ESP"供应商

NOTES:

 © 2007 Microchip Technology Inc.

查询"DSPIC33FJ12MC02ESP"供应商

6.0 INTERRUPT CONTROLLER

Note:	This data sheet summarizes the features of the dsPIC33FJ12MC201/202 devices. It is not intended to be a comprehensive reference source. To complement the information in this data sheet, refer to the *"dsPIC33F Family Reference Manual"*. Please see the Microchip web site (www.microchip.com) for the latest dsPIC33F Family Reference Manual chapters.

The dsPIC33FJ12MC201/202 interrupt controller reduces the numerous peripheral interrupt request signals to a single interrupt request signal to the dsPIC33FJ12MC201/202 CPU. It has the following features:

- Up to 8 processor exceptions and software traps
- 7 user-selectable priority levels
- Interrupt Vector Table (IVT) with up to 118 vectors
- A unique vector for each interrupt or exception source
- Fixed priority within a specified user priority level
- Alternate Interrupt Vector Table (AIVT) for debug support
- Fixed interrupt entry and return latencies

6.1 Interrupt Vector Table

The Interrupt Vector Table (IVT) is shown in Figure 6-1. The IVT resides in program memory, starting at location 000004h. The IVT contains 126 vectors consisting of 8 nonmaskable trap vectors plus up to 118 sources of interrupt. In general, each interrupt source has its own vector. Each interrupt vector contains a 24-bit-wide address. The value programmed into each interrupt vector location is the starting address of the associated Interrupt Service Routine (ISR).

Interrupt vectors are prioritized in terms of their natural priority. This priority is linked to their position in the vector table. Lower addresses generally have a higher natural priority. For example, the interrupt associated with vector 0 will take priority over interrupts at any other vector address.

dsPIC33FJ12MC201/202 devices implement up to 26 unique interrupts and 4 nonmaskable traps. These are summarized in Table 6-1 and Table 6-2.

6.1.1 ALTERNATE INTERRUPT VECTOR TABLE

The Alternate Interrupt Vector Table (AIVT) is located after the IVT, as shown in Figure 6-1. Access to the AIVT is provided by the ALTIVT control bit (INTCON2<15>). If the ALTIVT bit is set, all interrupt and exception processes use the alternate vectors instead of the default vectors. The alternate vectors are organized in the same manner as the default vectors.

The AIVT supports debugging by providing a means to switch between an application and a support environment without requiring the interrupt vectors to be reprogrammed. This feature also enables switching between applications for evaluation of different software algorithms at run time. If the AIVT is not needed, the AIVT should be programmed with the same addresses used in the IVT.

6.2 Reset Sequence

A device Reset is not a true exception because the interrupt controller is not involved in the Reset process. The dsPIC33FJ12MC201/202 device clears its registers in response to a Reset, which forces the PC to zero. The digital signal controller then begins program execution at location 0x000000. A `GOTO` instruction at the Reset address can redirect program execution to the appropriate start-up routine.

Note:	Any unimplemented or unused vector locations in the IVT and AIVT should be programmed with the address of a default interrupt handler routine that contains a `RESET` instruction.

查询"DSPIC33FJ12MC02ESP"供应商

FIGURE 6-1: dsPIC33FJ12MC201/202 INTERRUPT VECTOR TABLE

Decreasing Natural Order Priority

Reset – GOTO Instruction	0x000000	
Reset – GOTO Address	0x000002	
Reserved	0x000004	
Oscillator Fail Trap Vector		
Address Error Trap Vector		
Stack Error Trap Vector		
Math Error Trap Vector		
Reserved		
Reserved		
Reserved		
Interrupt Vector 0	0x000014	Interrupt Vector Table (IVT)(1)
Interrupt Vector 1		
~		
~		
~		
Interrupt Vector 52	0x00007C	
Interrupt Vector 53	0x00007E	
Interrupt Vector 54	0x000080	
~		
~		
~		
Interrupt Vector 116	0x0000FC	
Interrupt Vector 117	0x0000FE	
Reserved	0x000100	
Reserved	0x000102	
Reserved		
Oscillator Fail Trap Vector		
Address Error Trap Vector		
Stack Error Trap Vector		
Math Error Trap Vector		
Reserved		
Reserved		Alternate Interrupt Vector Table (AIVT)(1)
Reserved		
Interrupt Vector 0	0x000114	
Interrupt Vector 1		
~		
~		
~		
Interrupt Vector 52	0x00017C	
Interrupt Vector 53	0x00017E	
Interrupt Vector 54	0x000180	
~		
~		
~		
Interrupt Vector 116		
Interrupt Vector 117	0x0001FE	
Start of Code	0x000200	

Note 1: See Table 6-1 for the list of implemented interrupt vectors.

 © 2007 Microchip Technology Inc.

查询"DSPIC33FJ12MC02ESP"供应商

TABLE 6-1: INTERRUPT VECTORS

Vector Number	Interrupt Request (IRQ) Number	IVT Address	AIVT Address	Interrupt Source
8	0	0x000014	0x000114	INT0 – External Interrupt 0
9	1	0x000016	0x000116	IC1 – Input Compare 1
10	2	0x000018	0x000118	OC1 – Output Compare 1
11	3	0x00001A	0x00011A	T1 – Timer1
12	4	0x00001C	0x00011C	Reserved
13	5	0x00001E	0x00011E	IC2 – Input Capture 2
14	6	0x000020	0x000120	OC2 – Output Compare 2
15	7	0x000022	0x000122	T2 – Timer2
16	8	0x000024	0x000124	T3 – Timer3
17	9	0x000026	0x000126	SPI1E – SPI1 Error
18	10	0x000028	0x000128	SPI1 – SPI1 Transfer Done
19	11	0x00002A	0x00012A	U1RX – UART1 Receiver
20	12	0x00002C	0x00012C	U1TX – UART1 Transmitter
21	13	0x00002E	0x00012E	ADC1 – ADC 1
22	14	0x000030	0x000130	Reserved
23	15	0x000032	0x000132	Reserved
24	16	0x000034	0x000134	SI2C1 – I2C1 Slave Events
25	17	0x000036	0x000136	MI2C1 – I2C1 Master Events
26	18	0x000038	0x000138	Reserved
27	19	0x00003A	0x00013A	Change Notification Interrupt
28	20	0x00003C	0x00013C	INT1 – External Interrupt 1
29	21	0x00003E	0x00013E	Reserved
30	22	0x000040	0x000140	IC7 – Input Capture 7
31	23	0x000042	0x000142	IC8 – Input Capture 8
32	24	0x000044	0x000144	Reserved
33	25	0x000046	0x000146	Reserved
34	26	0x000048	0x000148	Reserved
35	27	0x00004A	0x00014A	Reserved
36	28	0x00004C	0x00014C	Reserved
37	29	0x00004E	0x00014E	INT2 – External Interrupt 2
38	30	0x000050	0x000150	Reserved
39	31	0x000052	0x000152	Reserved
40	32	0x000054	0x000154	Reserved
41	33	0x000056	0x000156	Reserved
42	34	0x000058	0x000158	Reserved
43	35	0x00005A	0x00015A	Reserved
44	36	0x00005C	0x00015C	Reserved
45	37	0x00005E	0x00015E	Reserved
46	38	0x000060	0x000160	Reserved
47	39	0x000062	0x000162	Reserved
48	40	0x000064	0x000164	Reserved
49	41	0x000066	0x000166	Reserved
50	42	0x000068	0x000168	Reserved
51	43	0x00006A	0x00016A	Reserved
52	44	0x00006C	0x00016C	Reserved
53	45	0x00006E	0x00016E	Reserved

查询"DSPIC33FJ12MC02ESP"供应商

TABLE 6-1: INTERRUPT VECTORS (CONTINUED)

Vector Number	Interrupt Request (IRQ) Number	IVT Address	AIVT Address	Interrupt Source
54	46	0x000070	0x000170	Reserved
55	47	0x000072	0x000172	Reserved
56	48	0x000074	0x000174	Reserved
57	49	0x000076	0x000176	Reserved
58	50	0x000078	0x000178	Reserved
59	51	0x00007A	0x00017A	Reserved
60	52	0x00007C	0x00017C	Reserved
61	53	0x00007E	0x00017E	Reserved
62	54	0x000080	0x000180	Reserved
63	55	0x000082	0x000182	Reserved
64	56	0x000084	0x000184	Reserved
65	57	0x000086	0x000186	PWM1 – PWM1 Period Match
66	58	0x000088	0x000188	QEI – Position Counter Compare
67	59	0x00008A	0x00018A	Reserved
68	60	0x00008C	0x00018C	Reserved
69	61	0x00008E	0x00018E	Reserved
70	62	0x000090	0x000190	Reserved
71	63	0x000092	0x000192	$\overline{\text{FLTA1}}$ – PWM1 Fault A
72	64	0x000094	0x000194	Reserved
73	65	0x000096	0x000196	U1E – UART1 Error
74	66	0x000098	0x000198	Reserved
75	67	0x00009A	0x00019A	Reserved
76	68	0x00009C	0x00019C	Reserved
77	69	0x00009E	0x00019E	Reserved
78	70	0x0000A0	0x0001A0	Reserved
79	71	0x0000A2	0x0001A2	Reserved
80	72	0x0000B0	0x0001B0	Reserved
81	73	0x0000B2	0x0001B2	PWM2 – PWM2 Period Match
82	74	0x000086	0x000186	$\overline{\text{FLTA2}}$ – PWM2 Fault A
83-125	75-117	0x0000A4-0x0000FE	0x0001A4-0x0001FE	Reserved

TABLE 6-2: TRAP VECTORS

Vector Number	IVT Address	AIVT Address	Trap Source
0	0x000004	0x000104	Reserved
1	0x000006	0x000106	Oscillator Failure
2	0x000008	0x000108	Address Error
3	0x00000A	0x00010A	Stack Error
4	0x00000C	0x00010C	Math Error
5	0x00000E	0x00010E	Reserved
6	0x000010	0x000110	Reserved
7	0x000012	0x000112	Reserved

 © 2007 Microchip Technology Inc.

查询"DSPIC33FJ12MC02ESP"供应商

6.3 Interrupt Control and Status Registers

dsPIC33FJ12MC201/202 devices implement a total of 22 registers for the interrupt controller:

- INTCON1
- INTCON2
- IFSx
- IECx
- IPCx
- INTTREG

6.3.1 INTCON1 AND INTCON2

Global interrupt control functions are controlled from INTCON1 and INTCON2. INTCON1 contains the Interrupt Nesting Disable (NSTDIS) bit as well as the control and status flags for the processor trap sources. The INTCON2 register controls the external interrupt request signal behavior and the use of the Alternate Interrupt Vector Table.

6.3.2 IFS0–IFS4

The IFS registers maintain all of the interrupt request flags. Each source of interrupt has a status bit, which is set by the respective peripherals or external signal and is cleared via software.

6.3.3 IEC0–IEC4

The IEC registers maintain all of the interrupt enable bits. These control bits are used to individually enable interrupts from the peripherals or external signals.

6.3.4 IPC0–IPC18

The IPC registers are used to set the interrupt priority level for each source of interrupt. Each user interrupt source can be assigned to one of eight priority levels.

6.3.5 INTTREG

The INTTREG register contains the associated interrupt vector number and the new CPU interrupt priority level, which are latched into vector number (VECNUM<6:0>) and Interrupt level (ILR<3:0>) bit fields in the INTTREG register. The new interrupt priority level is the priority of the pending interrupt.

The interrupt sources are assigned to the IFSx, IECx and IPCx registers in the same sequence that they are listed in Table 6-1. For example, the INT0 (External Interrupt 0) is shown as having vector number 8 and a natural order priority of 0. Thus, the INT0IF bit is found in IFS0<0>, the INT0IE bit in IEC0<0>, and the INT0IP bits in the first position of IPC0 (IPC0<2:0>).

6.3.6 STATUS/CONTROL REGISTERS

Although they are not specifically part of the interrupt control hardware, two of the CPU Control registers contain bits that control interrupt functionality.

- The CPU STATUS register, SR, contains the IPL<2:0> bits (SR<7:5>). These bits indicate the current CPU interrupt priority level. The user can change the current CPU priority level by writing to the IPL bits.
- The CORCON register contains the IPL3 bit which, together with IPL<2:0>, also indicates the current CPU priority level. IPL3 is a read-only bit so that trap events cannot be masked by the user software.

All Interrupt registers are described in Register 6-1 through Register 6-24 in the following pages.

查询"DSPIC33FJ12MC02ESP"供应商

REGISTER 6-1: SR: CPU STATUS REGISTER(1)

R-0	R-0	R/C-0	R/C-0	R-0	R/C-0	R -0	R/W-0
OA	OB	SA	SB	OAB	SAB	DA	DC
bit 15							bit 8

R/W-0(3)	R/W-0(3)	R/W-0(3)	R-0	R/W-0	R/W-0	R/W-0	R/W-0
IPL2(2)	**IPL1(2)**	**IPL0(2)**	RA	N	OV	Z	C
bit 7							bit 0

Legend:		
C = Clear only bit	R = Readable bit	U = Unimplemented bit, read as ‘0’
S = Set only bit	W = Writable bit	-n = Value at POR
‘1’ = Bit is set	‘0’ = Bit is cleared	x = Bit is unknown

bit 7-5 **IPL<2:0>:** CPU Interrupt Priority Level Status bits(1)
111 = CPU Interrupt Priority Level is 7 (15), user interrupts disabled
110 = CPU Interrupt Priority Level is 6 (14)
101 = CPU Interrupt Priority Level is 5 (13)
100 = CPU Interrupt Priority Level is 4 (12)
011 = CPU Interrupt Priority Level is 3 (11)
010 = CPU Interrupt Priority Level is 2 (10)
001 = CPU Interrupt Priority Level is 1 (9)
000 = CPU Interrupt Priority Level is 0 (8)

Note 1: For complete register details, see **Register 2-1: “SR: CPU STATUS Register”**.
2: The IPL<2:0> bits are concatenated with the IPL<3> bit (CORCON<3>) to form the CPU Interrupt Priority Level. The value in parentheses indicates the IPL if IPL<3> = 1. User interrupts are disabled when IPL<3> = 1.
3: The IPL<2:0> Status bits are read-only when NSTDIS (INTCON1<15>) = 1.

REGISTER 6-2: CORCON: CORE CONTROL REGISTER(1)

U-0	U-0	U-0	R/W-0	R/W-0	R-0	R-0	R-0
—	—	—	US	EDT	DL<2:0>		
bit 15							bit 8

R/W-0	R/W-0	R/W-1	R/W-0	R/C-0	R/W-0	R/W-0	R/W-0
SATA	SATB	SATDW	ACCSAT	**IPL3(2)**	PSV	RND	IF
bit 7							bit 0

Legend:	C = Clear only bit		
R = Readable bit	W = Writable bit	-n = Value at POR	‘1’ = Bit is set
0’ = Bit is cleared	‘x = Bit is unknown	U = Unimplemented bit, read as ‘0’	

bit 3 **IPL3:** CPU Interrupt Priority Level Status bit 3(2)
1 = CPU interrupt priority level is greater than 7
0 = CPU interrupt priority level is 7 or less

Note 1: For complete register details, see **Register 2-2: “CORCON: CORE Control Register”**.
2: The IPL3 bit is concatenated with the IPL<2:0> bits (SR<7:5>) to form the CPU Interrupt Priority Level.

 © 2007 Microchip Technology Inc.

查询"DSPIC33FJ12MC02ESP"供应商

REGISTER 6-3: INTCON1: INTERRUPT CONTROL REGISTER 1

R/W-0	R/W-0	R/W-0	R/W-0	R/W-0	R/W-0	R/W-0	R/W-0
NSTDIS	OVAERR	OVBERR	COVAERR	COVBERR	OVATE	OVBTE	COVTE
bit 15							bit 8

R/W-0	R/W-0	U-0	R/W-0	R/W-0	R/W-0	R/W-0	U-0
SFTACERR	DIV0ERR	—	MATHERR	ADDRERR	STKERR	OSCFAIL	—
bit 7							bit 0

Legend:			
R = Readable bit	W = Writable bit	U = Unimplemented bit, read as ‘0’	
-n = Value at POR	‘1’ = Bit is set	‘0’ = Bit is cleared	x = Bit is unknown

bit 15 **NSTDIS:** Interrupt Nesting Disable bit
1 = Interrupt nesting is disabled
0 = Interrupt nesting is enabled

bit 14 **OVAERR:** Accumulator A Overflow Trap Flag bit
1 = Trap was caused by overflow of Accumulator A
0 = Trap was not caused by overflow of Accumulator A

bit 13 **OVBERR:** Accumulator B Overflow Trap Flag bit
1 = Trap was caused by overflow of Accumulator B
0 = Trap was not caused by overflow of Accumulator B

bit 12 **COVAERR:** Accumulator A Catastrophic Overflow Trap Enable bit
1 = Trap was caused by catastrophic overflow of Accumulator A
0 = Trap was not caused by catastrophic overflow of Accumulator A

bit 11 **COVBERR:** Accumulator B Catastrophic Overflow Trap Enable bit
1 = Trap was caused by catastrophic overflow of Accumulator B
0 = Trap was not caused by catastrophic overflow of Accumulator B

bit 10 **OVATE:** Accumulator A Overflow Trap Enable bit
1 = Trap overflow of Accumulator A
0 = Trap disabled

bit 9 **OVBTE:** Accumulator B Overflow Trap Enable bit
1 = Trap overflow of Accumulator B
0 = Trap disabled

bit 8 **COVTE:** Catastrophic Overflow Trap Enable bit
1 = Trap on catastrophic overflow of Accumulator A or B enabled
0 = Trap disabled

bit 7 **SFTACERR:** Shift Accumulator Error Status bit
1 = Math error trap was caused by an invalid accumulator shift
0 = Math error trap was not caused by an invalid accumulator shift

bit 6 **DIV0ERR:** Arithmetic Error Status bit
1 = Math error trap was caused by a divide by zero
0 = Math error trap was not caused by a divide by zero

bit 5 **Unimplemented:** Read as ‘0’

bit 4 **MATHERR:** Arithmetic Error Status bit
1 = Math error trap has occurred
0 = Math error trap has not occurred

bit 3 **ADDRERR:** Address Error Trap Status bit
1 = Address error trap has occurred
0 = Address error trap has not occurred

查询"DSPIC33FJ12MC02ESP"供应商

REGISTER 6-3: INTCON1: INTERRUPT CONTROL REGISTER 1 (CONTINUED)

bit 2 **STKERR:** Stack Error Trap Status bit
1 = Stack error trap has occurred
0 = Stack error trap has not occurred

bit 1 **OSCFAIL:** Oscillator Failure Trap Status bit
1 = Oscillator failure trap has occurred
0 = Oscillator failure trap has not occurred

bit 0 **Unimplemented:** Read as '0'

 © 2007 Microchip Technology Inc.

查询"DSPIC33FJ12MC02ESP"供应商

REGISTER 6-4: INTCON2: INTERRUPT CONTROL REGISTER 2

R/W-0	R-0	U-0	U-0	U-0	U-0	U-0	U-0
ALTIVT	DISI	—	—	—	—	—	—
bit 15							bit 8

U-0	U-0	U-0	U-0	U-0	R/W-0	R/W-0	R/W-0
—	—	—	—	—	INT2EP	INT1EP	INT0EP
bit 7							bit 0

Legend:			
R = Readable bit	W = Writable bit	U = Unimplemented bit, read as ‘0’	
-n = Value at POR	‘1’ = Bit is set	‘0’ = Bit is cleared	x = Bit is unknown

bit 15 **ALTIVT:** Enable Alternate Interrupt Vector Table bit
1 = Use alternate vector table
0 = Use standard (default) vector table

bit 14 **DISI:** DISI Instruction Status bit
1 = DISI instruction is active
0 = DISI instruction is not active

bit 13-3 **Unimplemented:** Read as ‘0’

bit 2 **INT2EP:** External Interrupt 2 Edge Detect Polarity Select bit
1 = Interrupt on negative edge
0 = Interrupt on positive edge

bit 1 **INT1EP:** External Interrupt 1 Edge Detect Polarity Select bit
1 = Interrupt on negative edge
0 = Interrupt on positive edge

bit 0 **INT0EP:** External Interrupt 0 Edge Detect Polarity Select bit
1 = Interrupt on negative edge
0 = Interrupt on positive edge

查询"DSPIC33FJ12MC02ESP"供应商

REGISTER 6-5: IFS0: INTERRUPT FLAG STATUS REGISTER 0

U-0	U-0	R/W-0	R/W-0	R/W-0	R/W-0	R/W-0	R/W-0
—	—	AD1IF	U1TXIF	U1RXIF	SPI1IF	SPI1EIF	T3IF
bit 15							bit 8

R/W-0	R/W-0	R/W-0	U-0	R/W-0	R/W-0	R/W-0	R/W-0
T2IF	OC2IF	IC2IF	—	T1IF	OC1IF	IC1IF	INT0IF
bit 7							bit 0

Legend:			
R = Readable bit	W = Writable bit	U = Unimplemented bit, read as ‘0’	
-n = Value at POR	‘1’ = Bit is set	‘0’ = Bit is cleared	x = Bit is unknown

bit 15-14 **Unimplemented:** Read as ‘0’

bit 13 **AD1IF:** ADC1 Conversion Complete Interrupt Flag Status bit
1 = Interrupt request has occurred
0 = Interrupt request has not occurred

bit 12 **U1TXIF:** UART1 Transmitter Interrupt Flag Status bit
1 = Interrupt request has occurred
0 = Interrupt request has not occurred

bit 11 **U1RXIF:** UART1 Receiver Interrupt Flag Status bit
1 = Interrupt request has occurred
0 = Interrupt request has not occurred

bit 10 **SPI1IF:** SPI1 Event Interrupt Flag Status bit
1 = Interrupt request has occurred
0 = Interrupt request has not occurred

bit 9 **SPI1EIF:** SPI1 Fault Interrupt Flag Status bit
1 = Interrupt request has occurred
0 = Interrupt request has not occurred

bit 8 **T3IF:** Timer3 Interrupt Flag Status bit
1 = Interrupt request has occurred
0 = Interrupt request has not occurred

bit 7 **T2IF:** Timer2 Interrupt Flag Status bit
1 = Interrupt request has occurred
0 = Interrupt request has not occurred

bit 6 **OC2IF:** Output Compare Channel 2 Interrupt Flag Status bit
1 = Interrupt request has occurred
0 = Interrupt request has not occurred

bit 5 **IC2IF:** Input Capture Channel 2 Interrupt Flag Status bit
1 = Interrupt request has occurred
0 = Interrupt request has not occurred

bit 4 **Unimplemented:** Read as ‘0’

bit 3 **T1IF:** Timer1 Interrupt Flag Status bit
1 = Interrupt request has occurred
0 = Interrupt request has not occurred

bit 2 **OC1IF:** Output Compare Channel 1 Interrupt Flag Status bit
1 = Interrupt request has occurred
0 = Interrupt request has not occurred

 © 2007 Microchip Technology Inc.

查询"DSPIC33FJ12MC02ESP"供应商

REGISTER 6-5: IFS0: INTERRUPT FLAG STATUS REGISTER 0 (CONTINUED)

bit 1 **IC1IF:** Input Capture Channel 1 Interrupt Flag Status bit
1 = Interrupt request has occurred
0 = Interrupt request has not occurred

bit 0 **INT0IF:** External Interrupt 0 Flag Status bit
1 = Interrupt request has occurred
0 = Interrupt request has not occurred

查询"DSPIC33FJ12MC02ESP"供应商

REGISTER 6-6: IFS1: INTERRUPT FLAG STATUS REGISTER 1

U-0	U-0	R/W-0	U-0	U-0	U-0	U-0	U-0
—	—	INT2IF	—	—	—	—	—
bit 15							bit 8

R/W-0	R/W-0	U-0	R/W-0	R/W-0	U-0	R/W-0	R/W-0
IC8IF	IC7IF	—	INT1IF	CNIF	—	MI2C1IF	SI2C1IF
bit 7							bit 0

Legend:			
R = Readable bit	W = Writable bit	U = Unimplemented bit, read as ‘0’	
-n = Value at POR	‘1’ = Bit is set	‘0’ = Bit is cleared	x = Bit is unknown

bit 15-14 **Unimplemented:** Read as ‘0’

bit 13 **INT2IF:** External Interrupt 2 Flag Status bit
1 = Interrupt request has occurred
0 = Interrupt request has not occurred

bit 12-8 **Unimplemented:** Read as ‘0’

bit 7 **IC8IF:** Input Capture Channel 8 Interrupt Flag Status bit
1 = Interrupt request has occurred
0 = Interrupt request has not occurred

bit 6 **IC7IF:** Input Capture Channel 7 Interrupt Flag Status bit
1 = Interrupt request has occurred
0 = Interrupt request has not occurred

bit 5 **Unimplemented:** Read as ‘0’

bit 4 **INT1IF:** External Interrupt 1 Flag Status bit
1 = Interrupt request has occurred
0 = Interrupt request has not occurred

bit 3 **CNIF:** Input Change Notification Interrupt Flag Status bit
1 = Interrupt request has occurred
0 = Interrupt request has not occurred

bit 2 **Unimplemented:** Read as ‘0’

bit 1 **MI2C1IF:** I2C1 Master Events Interrupt Flag Status bit
1 = Interrupt request has occurred
0 = Interrupt request has not occurred

bit 0 **SI2C1IF:** I2C1 Slave Events Interrupt Flag Status bit
1 = Interrupt request has occurred
0 = Interrupt request has not occurred

 © 2007 Microchip Technology Inc.

查询"DSPIC33FJ12MC02ESP"供应商

REGISTER 6-7: IFS3: INTERRUPT FLAG STATUS REGISTER 3

R/W-0	U-0	U-0	U-0	U-0	R/W-0	R/W-0	U-0
FLTA1IF	—	—	—	—	QEIIF	PWM1IF	—
bit 15							bit 8

U-0	U-0	U-0	U-0	U-0	U-0	U-0	U-0
—	—	—	—	—	—	—	—
bit 7							bit 0

Legend:			
R = Readable bit	W = Writable bit	U = Unimplemented bit, read as ‘0’	
-n = Value at POR	‘1’ = Bit is set	‘0’ = Bit is cleared	x = Bit is unknown

bit 15 **FLTA1IF:** PWM1 Fault A Interrupt Flag Status bit
1 = Interrupt request has occurred
0 = Interrupt request has not occurred

bit 14-11 **Unimplemented:** Read as ‘0’

bit 10 **QEIIF:** QEI Event Interrupt Flag Status bit
1 = Interrupt request has occurred
0 = Interrupt request has not occurred

bit 9 **PWM1IF:** PWM1 Error Interrupt Flag Status bit
1 = Interrupt request has occurred
0 = Interrupt request has not occurred

bit 8-0 **Unimplemented:** Read as ‘0’

查询"DSPIC33FJ12MC02ESP"供应商

REGISTER 6-8: IFS4: INTERRUPT FLAG STATUS REGISTER 4

U-0	U-0	U-0	U-0	U-0	R/W-0	R/W-0	U-0
—	—	—	—	—	FLTA2IF	PWM2IF	—
bit 15							bit 8

U-0	U-0	U-0	U-0	U-0	U-0	U-0	U-0
—	—	—	—	—	—	U1EIF	—
bit 7							bit 0

Legend:			
R = Readable bit	W = Writable bit	U = Unimplemented bit, read as ‘0’	
-n = Value at POR	‘1’ = Bit is set	‘0’ = Bit is cleared	x = Bit is unknown

bit 15-11 **Unimplemented:** Read as ‘0’

bit 10 **FLTA2IF:** PWM2 Fault A Interrupt Flag Status bit
1 = Interrupt request has occurred
0 = Interrupt request has not occurred

bit 9 **PWM2IF:** PWM2 Error Interrupt Enable bit
1 = Interrupt request has occurred
0 = Interrupt request has not occurred

bit 8-2 **Unimplemented:** Read as ‘0’

bit 1 **U1EIF:** UART1 Error Interrupt Flag Status bit
1 = Interrupt request has occurred
0 = Interrupt request has not occurred

bit 0 **Unimplemented:** Read as ‘0’

 © 2007 Microchip Technology Inc.

查询"DSPIC33FJ12MC02ESP"供应商

REGISTER 6-9: IEC0: INTERRUPT ENABLE CONTROL REGISTER 0

U-0	U-0	R/W-0	R/W-0	R/W-0	R/W-0	R/W-0	R/W-0
—	—	AD1IE	U1TXIE	U1RXIE	SPI1IE	SPI1EIE	T3IE
bit 15							bit 8

R/W-0	R/W-0	R/W-0	U-0	R/W-0	R/W-0	R/W-0	R/W-0
T2IE	OC2IE	IC2IE	—	T1IE	OC1IE	IC1IE	INT0IE
bit 7							bit 0

Legend:			
R = Readable bit	W = Writable bit	U = Unimplemented bit, read as ‘0’	
-n = Value at POR	‘1’ = Bit is set	‘0’ = Bit is cleared	x = Bit is unknown

bit 15-14 **Unimplemented:** Read as ‘0’

bit 13 **AD1IE:** ADC1 Conversion Complete Interrupt Enable bit
1 = Interrupt request enabled
0 = Interrupt request not enabled

bit 12 **U1TXIE:** UART1 Transmitter Interrupt Enable bit
1 = Interrupt request enabled
0 = Interrupt request not enabled

bit 11 **U1RXIE:** UART1 Receiver Interrupt Enable bit
1 = Interrupt request enabled
0 = Interrupt request not enabled

bit 10 **SPI1IE:** SPI1 Event Interrupt Enable bit
1 = Interrupt request enabled
0 = Interrupt request not enabled

bit 9 **SPI1EIE:** SPI1 Event Interrupt Enable bit
1 = Interrupt request enabled
0 = Interrupt request not enabled

bit 8 **T3IE:** Timer3 Interrupt Enable bit
1 = Interrupt request enabled
0 = Interrupt request not enabled

bit 7 **T2IE:** Timer2 Interrupt Enable bit
1 = Interrupt request enabled
0 = Interrupt request not enabled

bit 6 **OC2IE:** Output Compare Channel 2 Interrupt Enable bit
1 = Interrupt request enabled
0 = Interrupt request not enabled

bit 5 **IC2IE:** Input Capture Channel 2 Interrupt Enable bit
1 = Interrupt request enabled
0 = Interrupt request not enabled

bit 4 **Unimplemented:** Read as ‘0’

bit 3 **T1IE:** Timer1 Interrupt Enable bit
1 = Interrupt request enabled
0 = Interrupt request not enabled

bit 2 **OC1IE:** Output Compare Channel 1 Interrupt Enable bit
1 = Interrupt request enabled
0 = Interrupt request not enabled

查询"DSPIC33FJ12MC02ESP"供应商

REGISTER 6-9: IEC0: INTERRUPT ENABLE CONTROL REGISTER 0 (CONTINUED)

bit 1 **IC1IE:** Input Capture Channel 1 Interrupt Enable bit
1 = Interrupt request enabled
0 = Interrupt request not enabled

bit 0 **INT0IE:** External Interrupt 0 Enable bit
1 = Interrupt request enabled
0 = Interrupt request not enabled

 © 2007 Microchip Technology Inc.

查询"DSPIC33FJ12MC02ESP"供应商

REGISTER 6-10: IEC1: INTERRUPT ENABLE CONTROL REGISTER 1

U-0	U-0	R/W-0	U-0	U-0	U-0	U-0	U-0
—	—	INT2IE	—	—	—	—	—
bit 15							bit 8

R/W-0	R/W-0	U-0	U-0	U-0	U-0	R/W-0	R/W-0
IC8IE	IC7IE	—	INT1IE	CNIE	—	MI2C1IE	SI2C1IE
bit 7							bit 0

Legend:			
R = Readable bit	W = Writable bit	U = Unimplemented bit, read as ‘0’	
-n = Value at POR	‘1’ = Bit is set	‘0’ = Bit is cleared	x = Bit is unknown

bit 15-14 **Unimplemented:** Read as ‘0’

bit 13 **INT2IE:** External Interrupt 2 Enable bit
1 = Interrupt request enabled
0 = Interrupt request not enabled

bit 12-8 **Unimplemented:** Read as ‘0’

bit 7 **IC8IE:** Input Capture Channel 8 Interrupt Enable bit
1 = Interrupt request enabled
0 = Interrupt request not enabled

bit 6 **IC7IE:** Input Capture Channel 7 Interrupt Enable bit
1 = Interrupt request enabled
0 = Interrupt request not enabled

bit 5 **Unimplemented:** Read as ‘0’

bit 4 **INT1IE:** External Interrupt 1 Enable bit
1 = Interrupt request enabled
0 = Interrupt request not enabled

bit 3 **CNIE:** Input Change Notification Interrupt Enable bit
1 = Interrupt request enabled
0 = Interrupt request not enabled

bit 2 **Unimplemented:** Read as ‘0’

bit 1 **MI2C1IE:** I2C1 Master Events Interrupt Enable bit
1 = Interrupt request enabled
0 = Interrupt request not enabled

bit 0 **SI2C1IE:** I2C1 Slave Events Interrupt Enable bit
1 = Interrupt request enabled
0 = Interrupt request not enabled

查询"DSPIC33FJ12MC02ESP"供应商

REGISTER 6-11: IEC3: INTERRUPT ENABLE CONTROL REGISTER 3

R/W-0	U-0	U-0	U-0	U-0	R/W-0	R/W-0	U-0
FLTA1IE	—	—	—	—	QEIIE	PWM1IE	—
bit 15							bit 8

U-0	U-0	U-0	U-0	U-0	U-0	U-0	U-0
—	—	—	—	—	—	—	—
bit 7							bit 0

Legend:			
R = Readable bit	W = Writable bit	U = Unimplemented bit, read as ‘0’	
-n = Value at POR	‘1’ = Bit is set	‘0’ = Bit is cleared	x = Bit is unknown

bit 15 **FLTA1IE:** PWM1 Fault A Interrupt Enable bit
1 = Interrupt request enabled
0 = Interrupt request not enabled

bit 14-11 **Unimplemented:** Read as ‘0’

bit 10 **QEIIE:** QEI Event Interrupt Enable bit
1 = Interrupt request enabled
0 = Interrupt request not enabled

bit 9 **PWM1IE:** PWM1 Error Interrupt Enable bit
1 = Interrupt request enabled
0 = Interrupt request not enabled

bit 8-0 **Unimplemented:** Read as ‘0’

 © 2007 Microchip Technology Inc.

查询"DSPIC33FJ12MC02ESP"供应商

REGISTER 6-12: IEC4: INTERRUPT ENABLE CONTROL REGISTER 4

U-0	U-0	U-0	U-0	U-0	R/W-0	R/W-0	U-0
—	—	—	—	—	FLA2IE	PWM2IE	—
bit 15							bit 8

U-0	U-0	U-0	U-0	U-0	U-0	R/W-0	U-0
—	—	—	—	—	—	U1EIE	—
bit 7							bit 0

Legend:			
R = Readable bit	W = Writable bit	U = Unimplemented bit, read as ‘0’	
-n = Value at POR	‘1’ = Bit is set	‘0’ = Bit is cleared	x = Bit is unknown

bit 15-11 **Unimplemented:** Read as ‘0’

bit 10 **FLA2IE:** PWM2 Fault A Interrupt Enable bit
1 = Interrupt request enabled
0 = Interrupt request not enabled

bit 9 **PWM2IE:** PWM2 Error Interrupt Enable bit
1 = Interrupt request enabled
0 = Interrupt request not enabled

bit 8-2 **Unimplemented:** Read as ‘0’

bit 1 **U1EIE:** UART1 Error Interrupt Enable bit
1 = Interrupt request enabled
0 = Interrupt request not enabled

bit 0 **Unimplemented:** Read as ‘0’

查询"DSPIC33FJ12MC02ESP"供应商

REGISTER 6-13: IPC0: INTERRUPT PRIORITY CONTROL REGISTER 0

U-0	R/W-1	R/W-0	R/W-0	U-0	R/W-1	R/W-0	R/W-0
—	T1IP<2:0>			—	OC1IP<2:0>		
bit 15							bit 8

U-0	R/W-1	R/W-0	R/W-0	U-0	R/W-1	R/W-0	R/W-0
—	IC1IP<2:0>			—	INT0IP<2:0>		
bit 7							bit 0

Legend:			
R = Readable bit	W = Writable bit	U = Unimplemented bit, read as ‘0’	
-n = Value at POR	‘1’ = Bit is set	‘0’ = Bit is cleared	x = Bit is unknown

bit 15 **Unimplemented:** Read as ‘0’

bit 14-12 **T1IP<2:0>:** Timer1 Interrupt Priority bits
111 = Interrupt is priority 7 (highest priority interrupt)
•
•
•
001 = Interrupt is priority 1
000 = Interrupt source is disabled

bit 11 **Unimplemented:** Read as ‘0’

bit 10-8 **OC1IP<2:0>:** Output Compare Channel 1 Interrupt Priority bits
111 = Interrupt is priority 7 (highest priority interrupt)
•
•
•
001 = Interrupt is priority 1
000 = Interrupt source is disabled

bit 7 **Unimplemented:** Read as ‘0’

bit 6-4 **IC1IP<2:0>:** Input Capture Channel 1 Interrupt Priority bits
111 = Interrupt is priority 7 (highest priority interrupt)
•
•
•
001 = Interrupt is priority 1
000 = Interrupt source is disabled

bit 3 **Unimplemented:** Read as ‘0’

bit 2-0 **INT0IP<2:0>:** External Interrupt 0 Priority bits
111 = Interrupt is priority 7 (highest priority interrupt)
•
•
•
001 = Interrupt is priority 1
000 = Interrupt source is disabled

 © 2007 Microchip Technology Inc.

查询"DSPIC33FJ12MC02ESP"供应商

REGISTER 6-14: IPC1: INTERRUPT PRIORITY CONTROL REGISTER 1

U-0	R/W-1	R/W-0	R/W-0	U-0	R/W-1	R/W-0	R/W-0
—	T2IP<2:0>			—	OC2IP<2:0>		
bit 15							bit 8

U-0	R/W-1	R/W-0	R/W-0	U-0	U-1	U-0	U-0
—	IC2IP<2:0>			—	—	—	—
bit 7							bit 0

Legend:			
R = Readable bit	W = Writable bit	U = Unimplemented bit, read as ‘0’	
-n = Value at POR	‘1’ = Bit is set	‘0’ = Bit is cleared	x = Bit is unknown

bit 15 **Unimplemented:** Read as ‘0’

bit 14-12 **T2IP<2:0>:** Timer2 Interrupt Priority bits
111 = Interrupt is priority 7 (highest priority interrupt)
•
•
•
001 = Interrupt is priority 1
000 = Interrupt source is disabled

bit 11 **Unimplemented:** Read as ‘0’

bit 10-8 **OC2IP<2:0>:** Output Compare Channel 2 Interrupt Priority bits
111 = Interrupt is priority 7 (highest priority interrupt)
•
•
•
001 = Interrupt is priority 1
000 = Interrupt source is disabled

bit 7 **Unimplemented:** Read as ‘0’

bit 6-4 **IC2IP<2:0>:** Input Capture Channel 2 Interrupt Priority bits
111 = Interrupt is priority 7 (highest priority interrupt)
•
•
•
001 = Interrupt is priority 1
000 = Interrupt source is disabled

bit 3-0 **Unimplemented:** Read as ‘0’

查询"DSPIC33FJ12MC02ESP"供应商

REGISTER 6-15: IPC2: INTERRUPT PRIORITY CONTROL REGISTER 2

U-0	R/W-1	R/W-0	R/W-0	U-0	R/W-1	R/W-0	R/W-0
—	U1RXIP<2:0>			—	SPI1IP<2:0>		
bit 15							bit 8

U-0	R/W-1	R/W-0	R/W-0	U-0	R/W-1	R/W-0	R/W-0
—	SPI1EIP<2:0>			—	T3IP<2:0>		
bit 7							bit 0

Legend:			
R = Readable bit	W = Writable bit	U = Unimplemented bit, read as ‘0’	
-n = Value at POR	‘1’ = Bit is set	‘0’ = Bit is cleared	x = Bit is unknown

bit 15 **Unimplemented:** Read as ‘0’

bit 14-12 **U1RXIP<2:0>:** UART1 Receiver Interrupt Priority bits
111 = Interrupt is priority 7 (highest priority interrupt)
•
•
•
001 = Interrupt is priority 1
000 = Interrupt source is disabled

bit 11 **Unimplemented:** Read as ‘0’

bit 10-8 **SPI1IP<2:0>:** SPI1 Event Interrupt Priority bits
111 = Interrupt is priority 7 (highest priority interrupt)
•
•
•
001 = Interrupt is priority 1
000 = Interrupt source is disabled

bit 7 **Unimplemented:** Read as ‘0’

bit 6-4 **SPI1EIP<2:0>:** SPI1 Error Interrupt Priority bits
111 = Interrupt is priority 7 (highest priority interrupt)
•
•
•
001 = Interrupt is priority 1
000 = Interrupt source is disabled

bit 3 **Unimplemented:** Read as ‘0’

bit 2-0 **T3IP<2:0>:** Timer3 Interrupt Priority bits
111 = Interrupt is priority 7 (highest priority interrupt)
•
•
•
001 = Interrupt is priority 1
000 = Interrupt source is disabled

 © 2007 Microchip Technology Inc.

查询"DSPIC33FJ12MC02ESP"供应商

REGISTER 6-16: IPC3: INTERRUPT PRIORITY CONTROL REGISTER 3

U-0	U-0	U-0	U-0	U-0	R/W-1	R/W-0	R/W-0
—	—	—	—	—	—	—	—
bit 15							bit 8

U-0	R/W-1	R/W-0	R/W-0	U-0	R/W-1	R/W-0	R/W-0
—	AD1IP<2:0>			—	U1TXIP<2:0>		
bit 7							bit 0

Legend:			
R = Readable bit	W = Writable bit	U = Unimplemented bit, read as ‘0’	
-n = Value at POR	‘1’ = Bit is set	‘0’ = Bit is cleared	x = Bit is unknown

bit 15-7 **Unimplemented:** Read as ‘0’

bit 6-4 **AD1IP<2:0>:** ADC1 Conversion Complete Interrupt Priority bits
111 = Interrupt is priority 7 (highest priority interrupt)
•
•
•
001 = Interrupt is priority 1
000 = Interrupt source is disabled

bit 3 **Unimplemented:** Read as ‘0’

bit 2-0 **U1TXIP<2:0>:** UART1 Transmitter Interrupt Priority bits
111 = Interrupt is priority 7 (highest priority interrupt)
•
•
•
001 = Interrupt is priority 1
000 = Interrupt source is disabled

查询"DSPIC33FJ12MC02ESP"供应商

REGISTER 6-17: IPC4: INTERRUPT PRIORITY CONTROL REGISTER 4

U-0	R/W-1	R/W-0	R/W-0	U-0	U-0	U-0	U-0
—	CNIP<2:0>			—	—	—	—
bit 15							bit 8

U-0	R/W-1	R/W-0	R/W-0	U-0	R/W-1	R/W-0	R/W-0
—	MI2C1IP<2:0>			—	SI2C1IP<2:0>		
bit 7							bit 0

Legend:			
R = Readable bit	W = Writable bit	U = Unimplemented bit, read as ‘0’	
-n = Value at POR	‘1’ = Bit is set	‘0’ = Bit is cleared	x = Bit is unknown

bit 15 **Unimplemented:** Read as ‘0’

bit 14-12 **CNIP<2:0>:** Change Notification Interrupt Priority bits
111 = Interrupt is priority 7 (highest priority interrupt)
•
•
•
001 = Interrupt is priority 1
000 = Interrupt source is disabled

bit 11-7 **Unimplemented:** Read as ‘0’

bit 6-4 **MI2C1IP<2:0>:** I2C1 Master Events Interrupt Priority bits
111 = Interrupt is priority 7 (highest priority interrupt)
•
•
•
001 = Interrupt is priority 1
000 = Interrupt source is disabled

bit 3 **Unimplemented:** Read as ‘0’

bit 2-0 **SI2C1IP<2:0>:** I2C1 Slave Events Interrupt Priority bits
111 = Interrupt is priority 7 (highest priority interrupt)
•
•
•
001 = Interrupt is priority 1
000 = Interrupt source is disabled

 © 2007 Microchip Technology Inc.

查询"DSPIC33FJ12MC02ESP"供应商

REGISTER 6-18: IPC5: INTERRUPT PRIORITY CONTROL REGISTER 5

U-0	R/W-1	R/W-0	R/W-0	U-0	R/W-1	R/W-0	R/W-0
—	IC8IP<2:0>			—	IC7IP<2:0>		
bit 15							bit 8

U-0	U-1	U-0	U-0	U-0	R/W-1	R/W-0	R/W-0
—	—	—	—	—	INT1IP<2:0>		
bit 7							bit 0

Legend:			
R = Readable bit	W = Writable bit	U = Unimplemented bit, read as ‘0’	
-n = Value at POR	‘1’ = Bit is set	‘0’ = Bit is cleared	x = Bit is unknown

bit 15 **Unimplemented:** Read as ‘0’

bit 14-12 **IC8IP<2:0>:** Input Capture Channel 8 Interrupt Priority bits
111 = Interrupt is priority 7 (highest priority interrupt)
•
•
•
001 = Interrupt is priority 1
000 = Interrupt source is disabled

bit 11 **Unimplemented:** Read as ‘0’

bit 10-8 **IC7IP<2:0>:** Input Capture Channel 7 Interrupt Priority bits
111 = Interrupt is priority 7 (highest priority interrupt)
•
•
•
001 = Interrupt is priority 1
000 = Interrupt source is disabled

bit 7-3 **Unimplemented:** Read as ‘0’

bit 2-0 **INT1IP<2:0>:** External Interrupt 1 Priority bits
111 = Interrupt is priority 7 (highest priority interrupt)
•
•
•
001 = Interrupt is priority 1
000 = Interrupt source is disabled

查询"DSPIC33FJ12MC02ESP"供应商

REGISTER 6-19: IPC7: INTERRUPT PRIORITY CONTROL REGISTER 7

U-0	U-1	U-0	U-0	U-0	U-1	U-0	U-0
—	—	—	—	—	—	—	—
bit 15							bit 8

U-0	R/W-1	R/W-0	R/W-0	U-0	U-0	U-0	U-0
—	INT2IP<2:0>			—	—	—	—
bit 7							bit 0

Legend:			
R = Readable bit	W = Writable bit	U = Unimplemented bit, read as ‘0’	
-n = Value at POR	‘1’ = Bit is set	‘0’ = Bit is cleared	x = Bit is unknown

bit 15-7 **Unimplemented:** Read as ‘0’

bit 6-4 **INT2IP<2:0>:** External Interrupt 2 Priority bits

111 = Interrupt is priority 7 (highest priority interrupt)

•

•

•

001 = Interrupt is priority 1

000 = Interrupt source is disabled

bit 3-0 **Unimplemented:** Read as ‘0’

 © 2007 Microchip Technology Inc.

查询"DSPIC33FJ12MC02ESP"供应商

REGISTER 6-20: IPC14: INTERRUPT PRIORITY CONTROL REGISTER 14

U-0	U-0	U-0	U-0	U-0	R/W-1	R/W-0	R/W-0
—	—	—	—	—	QEIIP<2:0>		
bit 15							bit 8

U-0	R/W-1	R/W-0	R/W-0	U-0	U-0	U-0	U-0
—	PWM1IP<2:0>			—	—	—	—
bit 7							bit 0

Legend:			
R = Readable bit	W = Writable bit	U = Unimplemented bit, read as ‘0’	
-n = Value at POR	‘1’ = Bit is set	‘0’ = Bit is cleared	x = Bit is unknown

bit 15-12 **Unimplemented:** Read as ‘0’

bit 10-8 **QEIIP<2:0>:** QEI Interrupt Priority bits
111 = Interrupt is priority 7 (highest priority interrupt)
•
•
•
001 = Interrupt is priority 1
000 = Interrupt source is disabled

bit 7 **Unimplemented:** Read as ‘0’

bit 6-4 **PWM1IP<2:0>:** PWM1 Interrupt Priority bits
111 = Interrupt is priority 7 (highest priority interrupt)
•
•
•
001 = Interrupt is priority 1
000 = Interrupt source is disabled

bit 3-0 **Unimplemented:** Read as ‘0’

查询"DSPIC33FJ12MC02ESP"供应商

REGISTER 6-21: IPC15: INTERRUPT PRIORITY CONTROL REGISTER 15

U-0	R/W-1	R/W-0	R/W-0	U-0	U-0	U-0	U-0
—	FLTA1IP<2:0>			—	—	—	—
bit 15							bit 8

U-0	U-0	U-0	U-0	U-0	U-0	U-0	U-0
—	—	—	—	—	—	—	—
bit 7							bit 0

Legend:			
R = Readable bit	W = Writable bit	U = Unimplemented bit, read as ‘0’	
-n = Value at POR	‘1’ = Bit is set	‘0’ = Bit is cleared	x = Bit is unknown

bit 15 **Unimplemented:** Read as ‘0’

bit 14-12 **FLTA1IP<2:0>:** PWM1 Fault A Interrupt Priority bits
111 = Interrupt is priority 7 (highest priority interrupt)
•
•
•
001 = Interrupt is priority 1
000 = Interrupt source is disabled

bit 11-0 **Unimplemented:** Read as ‘0’

REGISTER 6-22: IPC16: INTERRUPT PRIORITY CONTROL REGISTER 16

U-0	U-0	U-0	U-0	U-0	U-0	U-0	U-0
—	—	—	—	—	—	—	—
bit 15							bit 8

U-0	R/W-1	R/W-0	R/W-0	U-0	U-0	U-0	U-0
—	U1EIP<2:0>			—	—	—	—
bit 7							bit 0

Legend:			
R = Readable bit	W = Writable bit	U = Unimplemented bit, read as ‘0’	
-n = Value at POR	‘1’ = Bit is set	‘0’ = Bit is cleared	x = Bit is unknown

bit 15-7 **Unimplemented:** Read as ‘0’

bit 6-4 **U1EIP<2:0>:** UART1 Error Interrupt Priority bits
111 = Interrupt is priority 7 (highest priority interrupt)
•
•
•
001 = Interrupt is priority 1
000 = Interrupt source is disabled

bit 3-0 **Unimplemented:** Read as ‘0’

 © 2007 Microchip Technology Inc.

查询"DSPIC33FJ12MC02ESP"供应商

REGISTER 6-23: IPC18: INTERRUPT PRIORITY CONTROL REGISTER 18

U-0	U-0	U-0	U-0	U-0	R/W-0	R/W-0	R/W-0
—	—	—	—	—	FLTA2IP<2:0>		
bit 15							bit 8

U-0	R/W-1	R/W-0	R/W-0	U-0	U-0	U-0	U-0
—	PWM2IP<2:0>			—	—	—	—
bit 7							bit 0

Legend:			
R = Readable bit	W = Writable bit	U = Unimplemented bit, read as ‘0’	
-n = Value at POR	‘1’ = Bit is set	‘0’ = Bit is cleared	x = Bit is unknown

bit 15-11 **Unimplemented:** Read as ‘0’

bit 8-10 **FLTA2IP<2:0>:** PWM2 Fault A Interrupt Priority bits
111 = Interrupt is priority 7 (highest priority interrupt)
•
•
•
001 = Interrupt is priority 1
000 = Interrupt source is disabled

bit 6-4 **PWM2IP<2:0>:** PWM2 Interrupt Priority bits
111 = Interrupt is priority 7 (highest priority interrupt)
•
•
•
001 = Interrupt is priority 1
000 = Interrupt source is disabled

bit 3-0 **Unimplemented:** Read as ‘0’

查询"DSPIC33FJ12MC02ESP"供应商

REGISTER 6-24: INTTREG: INTERRUPT CONTROL AND STATUS REGISTER

U-0	U-0	U-0	U-0	R-0	R-0	R-0	R-0
—	—	—	—	ILR<3:0>			
bit 15							bit 8

U-0	R-0	R-0	R-0	R-0	R-0	R-0	R-0
—	VECNUM<6:0>						
bit 7							bit 0

Legend:			
R = Readable bit	W = Writable bit	U = Unimplemented bit, read as ‘0’	
-n = Value at POR	‘1’ = Bit is set	‘0’ = Bit is cleared	x = Bit is unknown

bit 15-12 **Unimplemented:** Read as ‘0’

bit 11-8 **ILR:** New CPU Interrupt Priority Level bits
1111 = CPU Interrupt Priority Level is 15
•
•
•
0001 = CPU Interrupt Priority Level is 1
0000 = CPU Interrupt Priority Level is 0

bit 7 **Unimplemented:** Read as ‘0’

bit 6-0 **VECNUM:** Vector Number of Pending Interrupt bits
0111111 = Interrupt Vector pending is number 135
•
•
•
0000001 = Interrupt Vector pending is number 9
0000000 = Interrupt Vector pending is number 8

 © 2007 Microchip Technology Inc.

查询"DSPIC33FJ12MC02ESP"供应商

6.4 Interrupt Setup Procedures

6.4.1 INITIALIZATION

To configure an interrupt source at initialization:

1. Set the NSTDIS bit (INTCON1<15>) if nested interrupts are not desired.
2. Select the user-assigned priority level for the interrupt source by writing the control bits in the appropriate IPCx register. The priority level will depend on the specific application and type of interrupt source. If multiple priority levels are not desired, the IPCx register control bits for all enabled interrupt sources can be programmed to the same non-zero value.

Note:	At a device Reset, the IPCx registers are initialized such that all user interrupt sources are assigned to priority level 4.

3. Clear the interrupt flag status bit associated with the peripheral in the associated IFSx register.
4. Enable the interrupt source by setting the interrupt enable control bit associated with the source in the appropriate IECx register.

6.4.2 INTERRUPT SERVICE ROUTINE

The method used to declare an ISR and initialize the IVT with the correct vector address depends on the programming language (C or assembler) and the language development tool suite used to develop the application.

In general, the user application must clear the interrupt flag in the appropriate IFSx register for the source of interrupt that the ISR handles. Otherwise, program will re-enter the ISR immediately after exiting the routine. If the ISR is coded in assembly language, it must be terminated using a `RETFIE` instruction to unstack the saved PC value, SRL value and old CPU priority level.

6.4.3 TRAP SERVICE ROUTINE

A Trap Service Routine (TSR) is coded like an ISR, except that the appropriate trap status flag in the INTCON1 register must be cleared to avoid re-entry into the TSR.

6.4.4 INTERRUPT DISABLE

All user interrupts can be disabled using this procedure:

1. Push the current SR value onto the software stack using the `PUSH` instruction.
2. Force the CPU to priority level 7 by inclusive ORing the value OEh with SRL.

To enable user interrupts, the `POP` instruction can be used to restore the previous SR value.

Note:	Only user interrupts with a priority level of 7 or lower can be disabled. Trap sources (level 8-level 15) cannot be disabled.

The `DISI` instruction provides a convenient way to disable interrupts of priority levels 1-6 for a fixed period of time. Level 7 interrupt sources are not disabled by the `DISI` instruction.

查询"DSPIC33FJ12MC02ESP"供应商

NOTES:

 © 2007 Microchip Technology Inc.

查询"DSPIC33FJ12MC02ESP"供应商

7.0 OSCILLATOR CONFIGURATION

Note: This data sheet summarizes the features of the dsPIC33FJ12MC201/202 devices. It is not intended to be a comprehensive reference source. To complement the information in this data sheet, refer to the *"dsPIC33F Family Reference Manual"*. Please see the Microchip web site (www.microchip.com) for the latest dsPIC33F Family Reference Manual chapters.

The dsPIC33FJ12MC201/202 oscillator system provides:

- External and internal oscillator options as clock sources
- An on-chip Phase-Locked Loop (PLL) to scale the internal operating frequency to the required system clock frequency
- An internal FRC oscillator that can also be used with the PLL, thereby allowing full-speed operation without any external clock generation hardware
- Clock switching between various clock sources
- Programmable clock postscaler for system power savings
- A Fail-Safe Clock Monitor (FSCM) that detects clock failure and takes fail-safe measures
- A Clock Control register (OSCCON)
- Nonvolatile Configuration bits for main oscillator selection

A simplified diagram of the oscillator system is shown in Figure 7-1.

FIGURE 7-1: dsPIC33FJ12MC201/202 OSCILLATOR SYSTEM DIAGRAM

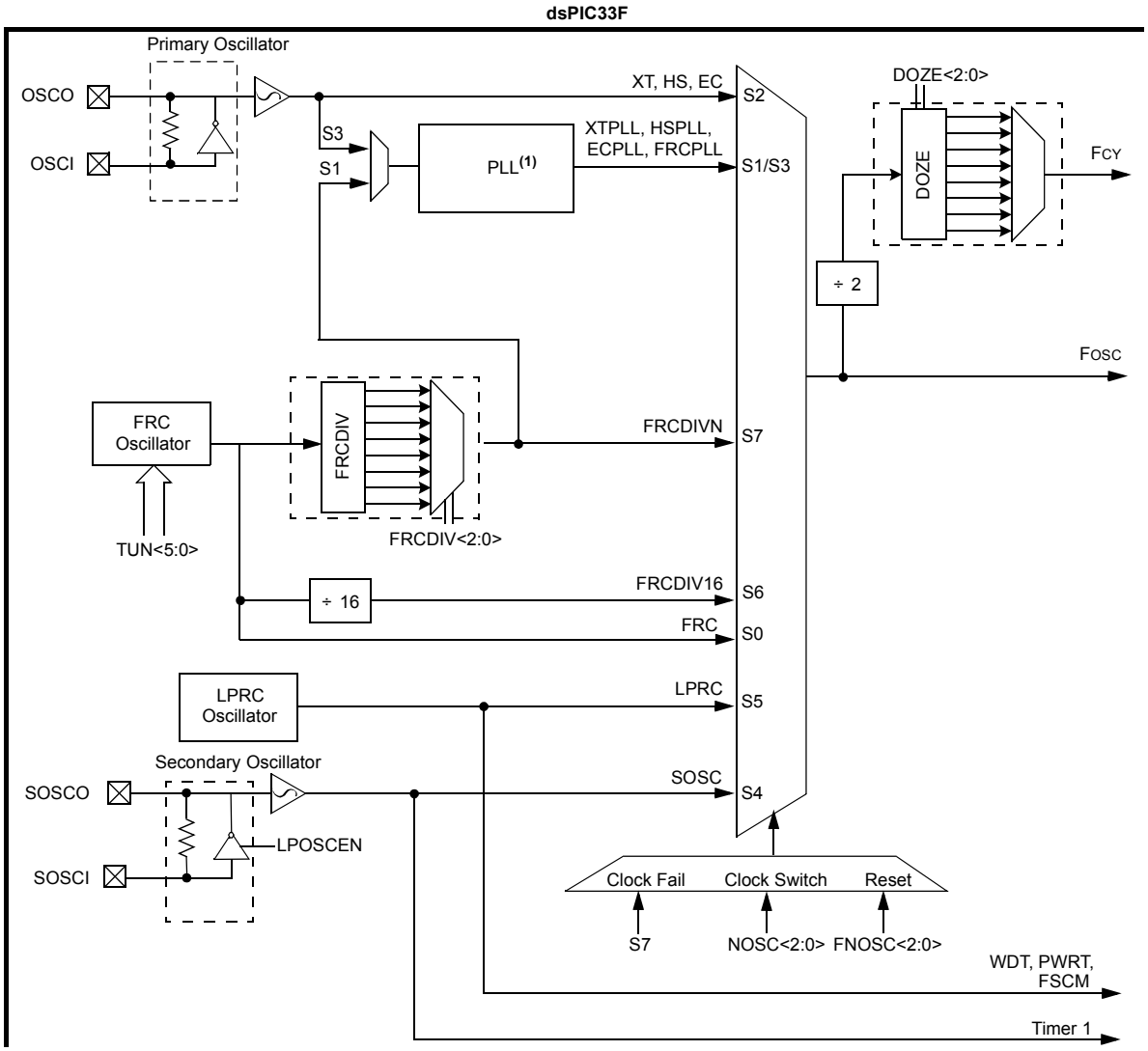

Note 1: See Figure 7-2 for PLL details.

查询"DSPIC33FJ12MC02ESP"供应商

7.1 CPU Clocking System

The dsPIC33FJ12MC201/202 devices provide seven system clock options:

- Fast RC (FRC) Oscillator
- FRC Oscillator with PLL
- Primary (XT, HS or EC) Oscillator
- Primary Oscillator with PLL
- Secondary (LP) Oscillator
- Low-Power RC (LPRC) Oscillator
- FRC Oscillator with postscaler

7.1.1 SYSTEM CLOCK SOURCES

The Fast RC (FRC) internal oscillator runs at a nominal frequency of 7.37 MHz. User software can tune the FRC frequency. User software can optionally specify a factor (ranging from 1:2 to 1:256) by which the FRC clock frequency is divided. This factor is selected using the FRCDIV<2:0> (CLKDIV<10:8>) bits.

The primary oscillator can use one of the following as its clock source:

- XT (Crystal): Crystals and ceramic resonators in the range of 3 MHz to 10 MHz. The crystal is connected to the OSC1 and OSC2 pins.
- HS (High-Speed Crystal): Crystals in the range of 10 MHz to 40 MHz. The crystal is connected to the OSC1 and OSC2 pins.
- EC (External Clock): External clock signal in the range of 0.8 MHz to 64 MHz. The external clock signal is directly applied to the OSC1 pin.

The secondary (LP) oscillator is designed for low power and uses a 32.768 kHz crystal or ceramic resonator. The LP oscillator uses the SOSCI and SOSCO pins.

The LPRC (Low-Power RC) internal oscIllator runs at a nominal frequency of 32.768 kHz. It is also used as a reference clock by the Watchdog Timer (WDT) and Fail-Safe Clock Monitor (FSCM).

The clock signals generated by the FRC and primary oscillators can be optionally applied to an on-chip Phase Locked Loop (PLL) to provide a wide range of output frequencies for device operation. PLL configuration is described in **Section 7.1.3 “PLL Configuration”**.

7.1.2 SYSTEM CLOCK SELECTION

The oscillator source used at a device Power-on Reset event is selected using Configuration bit settings. The oscillator Configuration bit settings are located in the Configuration registers in the program memory. (Refer to **Section 20.1 “Configuration Bits”** for further details.) The Initial Oscillator Selection Configuration bits, FNOSC<2:0> (FOSCSEL<2:0>), and the Primary Oscillator Mode Select Configuration bits, POSCMD<1:0> (FOSC<1:0>), select the oscillator source that is used at a Power-on Reset. The FRC primary oscillator is the default (unprogrammed) selection.

The Configuration bits allow users to choose among 12 different clock modes, shown in Table 7-1.

The output of the oscillator (or the output of the PLL if a PLL mode has been selected) FOSC is divided by 2 to generate the device instruction clock (FCY). FCY defines the operating speed of the device, and speeds up to 40 MHz are supported by the dsPIC33FJ12MC201/202 architecture.

Instruction execution speed or device operating frequency, FCY, is given by:

EQUATION 7-1: DEVICE OPERATING FREQUENCY

$$F_{CY} = F_{OSC}/2$$

7.1.3 PLL CONFIGURATION

The primary oscillator and internal FRC oscillator can optionally use an on-chip PLL to obtain higher speeds of operation. The PLL provides significant flexibility in selecting the device operating speed. A block diagram of the PLL is shown in Figure 7-2.

The output of the primary oscillator or FRC, denoted as ‘FIN’, is divided down by a prescale factor (N1) of 2, 3, ... or 33 before being provided to the PLL’s Voltage Controlled Oscillator (VCO). The input to the VCO must be selected in the range of 0.8 MHz to 8 MHz. The prescale factor ‘N1’ is selected using the PLLPRE<4:0> bits (CLKDIV<4:0>).

The PLL Feedback Divisor, selected using the PLLDIV<8:0> bits (PLLFBD<8:0>), provides a factor ‘M,’ by which the input to the VCO is multiplied. This factor must be selected such that the resulting VCO output frequency is in the range of 100 MHz to 200 MHz.

The VCO output is further divided by a postscale factor ‘N2.’ This factor is selected using the PLLPOST<1:0> bits (CLKDIV<7:6>). ‘N2’ can be either 2, 4 or 8, and must be selected such that the PLL output frequency (FOSC) is in the range of 12.5 MHz to 80 MHz, which generates device operating speeds of 6.25-40 MIPS.

For a primary oscillator or FRC oscillator, output ‘FIN’, the PLL output ‘FOSC’ is given by:

EQUATION 7-2: FOSC CALCULATION

$$F_{OSC} = F_{IN} * \left(\frac{M}{N1 * N2}\right)$$

 © 2007 Microchip Technology Inc.

查询"DSPIC33FJ12MC02ESP"供应商

For example, suppose a 10 MHz crystal is being used with the selected oscillator mode of XT with PLL.

- If PLLPRE<4:0> = 0, then N1 = 2. This yields a VCO input of 10/2 = 5 MHz, which is within the acceptable range of 0.8-8 MHz.
- If PLLDIV<8:0> = 0x1E, then M = 32. This yields a VCO output of 5 x 32 = 160 MHz, which is within the 100-200 MHz ranged needed.
- If PLLPOST<1:0> = 0, then N2 = 2. This provides a Fosc of 160/2 = 80 MHz. The resultant device operating speed is 80/2 = 40 MIPS.

EQUATION 7-3: XT WITH PLL MODE EXAMPLE

$$F_{CY} = \frac{F_{OSC}}{2} = \frac{1}{2}\left(\frac{10000000 * 32}{2 * 2}\right) = 40 \text{ MIPS}$$

FIGURE 7-2: dsPIC33FJ12MC201/202 PLL BLOCK DIAGRAM

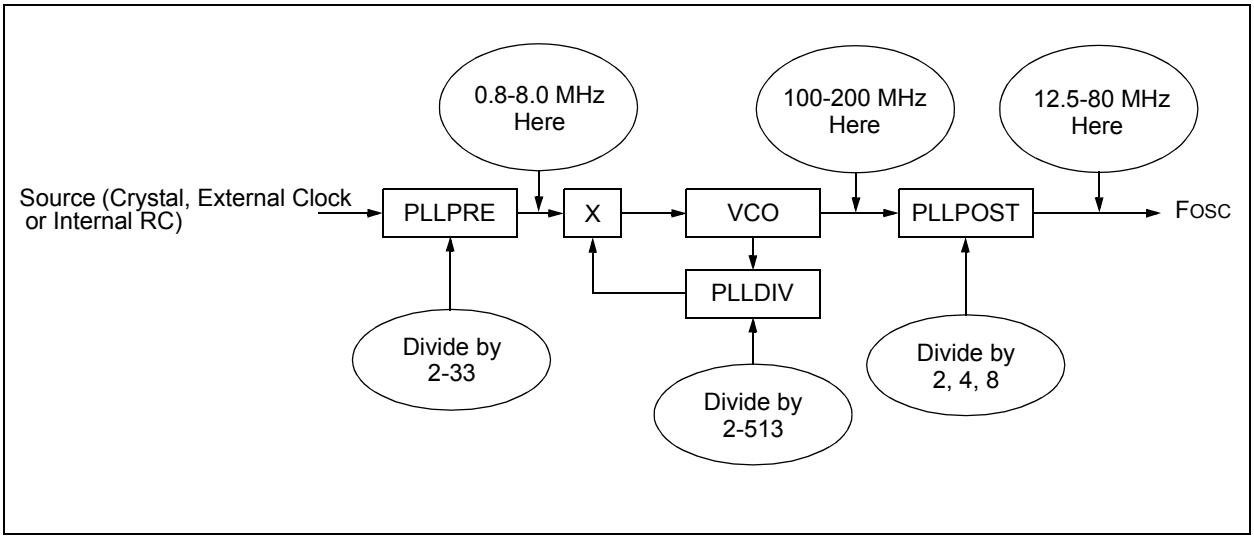

TABLE 7-1: CONFIGURATION BIT VALUES FOR CLOCK SELECTION

Oscillator Mode	Oscillator Source	POSCMD<1:0>	FNOSC<2:0>	Note
Fast RC Oscillator with Divide-by-N (FRCDIVN)	Internal	xx	111	**1, 2**
Fast RC Oscillator with Divide-by-16 (FRCDIV16)	Internal	xx	110	**1**
Low-Power RC Oscillator (LPRC)	Internal	xx	101	**1**
Secondary (Timer1) Oscillator (SOSC)	Secondary	xx	100	**1**
Primary Oscillator (HS) with PLL (HSPLL)	Primary	10	011	
Primary Oscillator (XT) with PLL (XTPLL)	Primary	01	011	
Primary Oscillator (EC) with PLL (ECPLL)	Primary	00	011	**1**
Primary Oscillator (HS)	Primary	10	010	
Primary Oscillator (XT)	Primary	01	010	
Primary Oscillator (EC)	Primary	00	010	**1**
Fast RC Oscillator with PLL (FRCPLL)	Internal	xx	001	**1**
Fast RC Oscillator (FRC)	Internal	xx	000	**1**

Note 1: OSC2 pin function is determined by the OSCIOFNC Configuration bit.

2: This is the default oscillator mode for an unprogrammed (erased) device.

查询"DSPIC33FJ12MC02ESP"供应商

REGISTER 7-1: OSCCON: OSCILLATOR CONTROL REGISTER

U-0	R-0	R-0	R-0	U-0	R/W-y	R/W-y	R/W-y
—	COSC<2:0>			—	NOSC<2:0>		
bit 15							bit 8

R/W-0	R/W-0	R-0	U-0	R/C-0	U-0	R/W-0	R/W-0
CLKLOCK	IOLOCK	LOCK	—	CF	—	LPOSCEN	OSWEN
bit 7							bit 0

Legend:	y = Value set from Configuration bits on POR		
R = Readable bit	W = Writable bit	U = Unimplemented bit, read as ‘0’	
-n = Value at POR	‘1’ = Bit is set	‘0’ = Bit is cleared	x = Bit is unknown

bit 15 **Unimplemented:** Read as ‘0’

bit 14-12 **COSC<2:0>:** Current Oscillator Selection bits (read-only)
000 = Fast RC oscillator (FRC)
001 = Fast RC oscillator (FRC) with PLL
010 = Primary oscillator (XT, HS, EC)
011 = Primary oscillator (XT, HS, EC) with PLL
100 = Secondary oscillator (SOSC)
101 = Low-Power RC oscillator (LPRC)
110 = Fast RC oscillator (FRC) with Divide-by-16
111 = Fast RC oscillator (FRC) with Divide-by-n

bit 11 **Unimplemented:** Read as ‘0’

bit 10-8 **NOSC<2:0>:** New Oscillator Selection bits
000 = Fast RC oscillator (FRC)
001 = Fast RC oscillator (FRC) with PLL
010 = Primary oscillator (XT, HS, EC)
011 = Primary oscillator (XT, HS, EC) with PLL
100 = Secondary oscillator (SOSC)
101 = Low-Power RC oscillator (LPRC)
110 = Fast RC oscillator (FRC) with Divide-by-16
111 = Fast RC oscillator (FRC) with Divide-by-n

bit 7 **CLKLOCK:** Clock Lock Enable bit
If clock switching is enabled and FSCM is disabled, (FOSC<FCKSM> = 0b01)
1 = Clock switching is disabled, system clock source is locked
0 = Clock switching is enabled, system clock source can be modified by clock switching

bit 6 **IOLOCK:** Peripheral Pin Select Lock bit
1 = Peripherial pin select is locked, write to peripheral pin select registers not allowed
0 = Peripherial pin select is not locked, write to peripheral pin select registers allowed

bit 5 **LOCK:** PLL Lock Status bit (read-only)
1 = Indicates that PLL is in lock, or PLL start-up timer is satisfied
0 = Indicates that PLL is out of lock, start-up timer is in progress or PLL is disabled

bit 4 **Unimplemented:** Read as ‘0’

bit 3 **CF:** Clock Fail Detect bit (read/clear by application)
1 = FSCM has detected clock failure
0 = FSCM has not detected clock failure

bit 2 **Unimplemented:** Read as ‘0’

 © 2007 Microchip Technology Inc.

查询"DSPIC33FJ12MC02ESP"供应商

REGISTER 7-1: OSCCON: OSCILLATOR CONTROL REGISTER (CONTINUED)

bit 1 **LPOSCEN:** Secondary (LP) Oscillator Enable bit
1 = Enable secondary oscillator
0 = Disable secondary oscillator

bit 0 **OSWEN:** Oscillator Switch Enable bit
1 = Request oscillator switch to selection specified by NOSC<2:0> bits
0 = Oscillator switch is complete

查询"DSPIC33FJ12MC02ESP"供应商

REGISTER 7-2: CLKDIV: CLOCK DIVISOR REGISTER

R/W-0	R/W-0	R/W-0	R/W-0	R/W-0	R/W-1	R/W-0	R/W-0
ROI	DOZE<2:0>			DOZEN(1)	FRCDIV<2:0>		
bit 15							bit 8

R/W-0	R/W-1	U-0	R/W-0	R/W-0	R/W-0	R/W-0	R/W-0
PLLPOST<1:0>		—	PLLPRE<4:0>				
bit 7							bit 0

Legend:	y = Value set from Configuration bits on POR		
R = Readable bit	W = Writable bit	U = Unimplemented bit, read as ‘0’	
-n = Value at POR	‘1’ = Bit is set	‘0’ = Bit is cleared	x = Bit is unknown

bit 15 **ROI:** Recover on Interrupt bit
1 = Interrupts will clear the DOZEN bit and the processor clock/peripheral clock ratio is set to 1:1
0 = Interrupts have no effect on the DOZEN bit

bit 14-12 **DOZE<2:0>:** Processor Clock Reduction Select bits
000 = FCY/1
001 = FCY/2
010 = FCY/4
011 = FCY/8 (default)
100 = FCY/16
101 = FCY/32
110 = FCY/64
111 = FCY/128

bit 11 **DOZEN:** DOZE Mode Enable bit(1)
1 = DOZE<2:0> field specifies the ratio between the peripheral clocks and the processor clocks
0 = Processor clock/peripheral clock ratio forced to 1:1

bit 10-8 **FRCDIV<2:0>:** Internal Fast RC Oscillator Postscaler bits
000 = FRC divide by 1 (default)
001 = FRC divide by 2
010 = FRC divide by 4
011 = FRC divide by 8
100 = FRC divide by 16
101 = FRC divide by 32
110 = FRC divide by 64
111 = FRC divide by 256

bit 7-6 **PLLPOST<1:0>:** PLL VCO Output Divider Select bits (also denoted as ‘N2’, PLL postscaler)
00 = Output/2
01 = Output/4 (default)
10 = Reserved
11 = Output/8

bit 5 **Unimplemented:** Read as ‘0’

bit 4-0 **PLLPRE<4:0>:** PLL Phase Detector Input Divider bits (also denoted as ‘N1’, PLL prescaler)
00000 = Input/2 (default)
00001 = Input/3
• • •
11111 = Input/33

Note 1: This bit is cleared when the ROI bit is set and an interrupt occurs.

 © 2007 Microchip Technology Inc.

查询"DSPIC33FJ12MC02ESP"供应商

REGISTER 7-3: PLLFBD: PLL FEEDBACK DIVISOR REGISTER

U-0	U-0	U-0	U-0	U-0	U-0	U-0	R/W-0(1)
—	—	—	—	—	—	—	PLLDIV<8>
bit 15							bit 8

R/W-0	R/W-0	R/W-1	R/W-1	R/W-0	R/W-0	R/W-0	R/W-0
PLLDIV<7:0>							
bit 7							bit 0

Legend:			
R = Readable bit	W = Writable bit	U = Unimplemented bit, read as ‘0’	
-n = Value at POR	‘1’ = Bit is set	‘0’ = Bit is cleared	x = Bit is unknown

bit 15-9 **Unimplemented:** Read as ‘0’

bit 8-0 **PLLDIV<8:0>:** PLL Feedback Divisor bits (also denoted as ‘M’, PLL multiplier)

000000000 = 2
000000001 = 3
000000010 = 4
•
•
•
000110000 = 50 (default)
•
•
•
111111111 = 513

查询"DSPIC33FJ12MC02ESP"供应商

REGISTER 7-4: OSCTUN: FRC OSCILLATOR TUNING REGISTER

U-0	U-0	U-0	U-0	U-0	U-0	U-0	U-0
—	—	—	—	—	—	—	—
bit 15							bit 8

U-0	U-0	R/W-0	R/W-0	R/W-0	R/W-0	R/W-0	R/W-0
—	—	TUN<5:0>					
bit 7							bit 0

Legend:			
R = Readable bit	W = Writable bit	U = Unimplemented bit, read as ‘0’	
-n = Value at POR	‘1’ = Bit is set	‘0’ = Bit is cleared	x = Bit is unknown

bit 15-6 **Unimplemented:** Read as ‘0’

bit 5-0 **TUN<5:0>:** FRC Oscillator Tuning bits

011111 = Center frequency +11.625%
011110 = Center frequency +11.25% (8.23 MHz)
•
•
•
000001 = Center frequency +0.375% (7.40 MHz)
000000 = Center frequency (7.37 MHz nominal)
111111 = Center frequency -0.375% (7.345 MHz)
•
•
•
100001 = Center frequency -11.625% (6.52 MHz)
100000 = Center frequency -12% (6.49 MHz)

 © 2007 Microchip Technology Inc.

查询"DSPIC33FJ12MC02ESP"供应商

7.2 Clock Switching Operation

Applications are free to switch among any of the four clock sources (Primary, LP, FRC and LPRC) under software control at any time. To limit the possible side effects of this flexibility, dsPIC33FJ12MC201/202 devices have a safeguard lock built into the switch process.

Note:	Primary Oscillator mode has three different submodes (XT, HS and EC), which are determined by the POSCMD<1:0> Configuration bits. While an application can switch to and from Primary Oscillator mode in software, it cannot switch among the different primary submodes without reprogramming the device.

7.2.1 ENABLING CLOCK SWITCHING

To enable clock switching, the FCKSM1 Configuration bit in the Configuration register must be programmed to '0'. (Refer to **Section 20.1 "Configuration Bits"** for further details.) If the FCKSM1 Configuration bit is unprogrammed ('1'), the clock switching function and Fail-Safe Clock Monitor function are disabled. This is the default setting.

The NOSC control bits (OSCCON<10:8>) do not control the clock selection when clock switching is disabled. However, the COSC bits (OSCCON<14:12>) reflect the clock source selected by the FNOSC Configuration bits.

The OSWEN control bit (OSCCON<0>) has no effect when clock switching is disabled. It is held at '0' at all times.

7.2.2 OSCILLATOR SWITCHING SEQUENCE

Performing a clock switch requires this basic sequence:

1. If desired, read the COSC bits (OSCCON<14:12>) to determine the current oscillator source.
2. Perform the unlock sequence to allow a write to the OSCCON register high byte.
3. Write the appropriate value to the NOSC control bits (OSCCON<10:8>) for the new oscillator source.
4. Perform the unlock sequence to allow a write to the OSCCON register low byte.
5. Set the OSWEN bit (OSCCON<0>) to initiate the oscillator switch.

Once the basic sequence is completed, the system clock hardware responds automatically as follows:

1. The clock switching hardware compares the COSC status bits with the new value of the NOSC control bits. If they are the same, the clock switch is a redundant operation. In this case, the OSWEN bit is cleared automatically and the clock switch is aborted.
2. If a valid clock switch has been initiated, the LOCK (OSCCON<5>) and the CF (OSCCON<3>) status bits are cleared.
3. The new oscillator is turned on by the hardware if it is not currently running. If a crystal oscillator must be turned on, the hardware waits until the Oscillator Start-up Timer (OST) expires. If the new source is using the PLL, the hardware waits until a PLL lock is detected (LOCK = 1).
4. The hardware waits for 10 clock cycles from the new clock source and then performs the clock switch.
5. The hardware clears the OSWEN bit to indicate a successful clock transition. In addition, the NOSC bit values are transferred to the COSC status bits.
6. The old clock source is turned off at this time, with the exception of LPRC (if WDT or FSCM are enabled) or LP (if LPOSCEN remains set).

Note 1:	The processor continues to execute code throughout the clock switching sequence. Timing-sensitive code should not be executed during this time.
2:	Direct clock switches between any primary oscillator mode with PLL and FRCPLL mode are not permitted. This applies to clock switches in either direction. In these instances, the application must switch to FRC mode as a transition clock source between the two PLL modes.

7.3 Fail-Safe Clock Monitor (FSCM)

The Fail-Safe Clock Monitor (FSCM) allows the device to continue to operate even in the event of an oscillator failure. The FSCM function is enabled by programming. If the FSCM function is enabled, the LPRC internal oscillator runs at all times (except during Sleep mode) and is not subject to control by the Watchdog Timer.

In the event of an oscillator failure, the FSCM generates a clock failure trap event and switches the system clock over to the FRC oscillator. Then the application program can either attempt to restart the oscillator or execute a controlled shutdown. The trap can be treated as a warm Reset by simply loading the Reset address into the oscillator fail trap vector.

If the PLL multiplier is used to scale the system clock, the internal FRC is also multiplied by the same factor on clock failure. Essentially, the device switches to FRC with PLL on a clock failure.

查询"DSPIC33FJ12MC02ESP"供应商

NOTES:

 © 2007 Microchip Technology Inc.

查询"DSPIC33FJ12MC02ESP"供应商

8.0 POWER-SAVING FEATURES

Note:	This data sheet summarizes the features of the dsPIC33FJ12MC201/202 devices. It is not intended to be a comprehensive reference source. To complement the information in this data sheet, refer to the *"dsPIC33F Family Reference Manual"*. Please see the Microchip web site (www.microchip.com) for the latest dsPIC33F Family Reference Manual chapters.

The dsPIC33FJ12MC201/202 devices provide the ability to manage power consumption by selectively managing clocking to the CPU and the peripherals. In general, a lower clock frequency and a reduction in the number of circuits being clocked constitutes lower consumed power. dsPIC33FJ12MC201/202 devices can manage power consumption in four different ways:

- Clock frequency
- Instruction-based Sleep and Idle modes
- Software-controlled Doze mode
- Selective peripheral control in software

Combinations of these methods can be used to selectively tailor an application's power consumption while still maintaining critical application features, such as timing-sensitive communications.

8.1 Clock Frequency and Clock Switching

dsPIC33FJ12MC201/202 devices allow a wide range of clock frequencies to be selected under application control. If the system clock configuration is not locked, users can choose low-power or high-precision oscillators by simply changing the NOSC bits (OSCCON<10:8>). The process of changing a system clock during operation, as well as limitations to the process, are discussed in more detail in **Section 7.0 "Oscillator Configuration"**.

8.2 Instruction-Based Power-Saving Modes

dsPIC33FJ12MC201/202 devices have two special power-saving modes that are entered through the execution of a special `PWRSAV` instruction. Sleep mode stops clock operation and halts all code execution. Idle mode halts the CPU and code execution, but allows peripheral modules to continue operation. The assembler syntax of the `PWRSAV` instruction is shown in Example 8-1.

Note:	SLEEP_MODE and IDLE_MODE are constants defined in the assembler include file for the selected device.

Sleep and Idle modes can be exited as a result of an enabled interrupt, WDT time-out or a device Reset. When the device exits these modes, it is said to wake-up.

8.2.1 SLEEP MODE

The following occur in Sleep mode:

- The system clock source is shut down. If an on-chip oscillator is used, it is turned off.
- The device current consumption is reduced to a minimum, provided that no I/O pin is sourcing current.
- The Fail-Safe Clock Monitor does not operate, since the system clock source is disabled.
- The LPRC clock continues to run in Sleep mode if the WDT is enabled.
- The WDT, if enabled, is automatically cleared prior to entering Sleep mode.
- Some device features or peripherals may continue to operate. This includes items such as the input change notification on the I/O ports, or peripherals that use an external clock input.
- Any peripheral that requires the system clock source for its operation is disabled.

The device will wake-up from Sleep mode on any of the these events:

- Any interrupt source that is individually enabled
- Any form of device Reset
- A WDT time-out

On wake-up from Sleep mode, the processor restarts with the same clock source that was active when Sleep mode was entered.

EXAMPLE 8-1: `PWRSAV` INSTRUCTION SYNTAX

```
PWRSAV  #SLEEP_MODE    ; Put the device into SLEEP mode
PWRSAV  #IDLE_MODE     ; Put the device into IDLE mode
```

查询"DSPIC33FJ12MC02ESP"供应商

8.2.2 IDLE MODE

The following occur in Idle mode:

- The CPU stops executing instructions.
- The WDT is automatically cleared.
- The system clock source remains active. By default, all peripheral modules continue to operate normally from the system clock source, but can also be selectively disabled (see **Section 8.4 "Peripheral Module Disable"**).
- If the WDT or FSCM is enabled, the LPRC also remains active.

The device will wake from Idle mode on any of these events:

- Any interrupt that is individually enabled
- Any device Reset
- A WDT time-out

On wake-up from Idle mode, the clock is reapplied to the CPU and instruction execution begins immediately, starting with the instruction following the `PWRSAV` instruction, or the first instruction in the ISR.

8.2.3 INTERRUPTS COINCIDENT WITH POWER SAVE INSTRUCTIONS

Any interrupt that coincides with the execution of a `PWRSAV` instruction is held off until entry into Sleep or Idle mode has completed. The device then wakes up from Sleep or Idle mode.

8.3 Doze Mode

The preferred strategies for reducing power consumption are changing clock speed and invoking one of the power-saving modes. In some circumstances, this may not be practical. For example, it may be necessary for an application to maintain uninterrupted synchronous communication, even while it is doing nothing else. Reducing system clock speed can introduce communication errors, while using a power-saving mode can stop communications completely.

Doze mode is a simple and effective alternative method to reduce power consumption while the device is still executing code. In this mode, the system clock continues to operate from the same source and at the same speed. Peripheral modules continue to be clocked at the same speed, while the CPU clock speed is reduced. Synchronization between the two clock domains is maintained, allowing the peripherals to access the SFRs while the CPU executes code at a slower rate.

Doze mode is enabled by setting the DOZEN bit (CLKDIV<11>). The ratio between peripheral and core clock speed is determined by the DOZE<2:0> bits (CLKDIV<14:12>). There are eight possible configurations, from 1:1 to 1:128, with 1:1 being the default setting.

Programs can use Doze mode to selectively reduce power consumption in event-driven applications. This allows clock-sensitive functions, such as synchronous communications, to continue without interruption while the CPU idles, waiting for something to invoke an interrupt routine. An automatic return to full-speed CPU operation on interrupts can be enabled by setting the ROI bit (CLKDIV<15>). By default, interrupt events have no effect on Doze mode operation.

For example, suppose the device is operating at 20 MIPS and the CAN module has been configured for 500 kbps based on this device operating speed. If the device is placed in Doze mode with a clock frequency ratio of 1:4, the CAN module continues to communicate at the required bit rate of 500 kbps, but the CPU now starts executing instructions at a frequency of 5 MIPS.

8.4 Peripheral Module Disable

The Peripheral Module Disable (PMD) registers provide a method to disable a peripheral module by stopping all clock sources supplied to that module. When a peripheral is disabled using the appropriate PMD control bit, the peripheral is in a minimum power consumption state. The control and status registers associated with the peripheral are also disabled, so writes to those registers will have no effect and read values will be invalid.

A peripheral module is enabled only if both the associated bit in the PMD register is cleared and the peripheral is supported by the specific dsPIC® DSC variant. If the peripheral is present in the device, it is enabled in the PMD register by default.

Note:	If a PMD bit is set, the corresponding module is disabled after a delay of one instruction cycle. Similarly, if a PMD bit is cleared, the corresponding module is enabled after a delay of one instruction cycle (assuming the module control registers are already configured to enable module operation).

 © 2007 Microchip Technology Inc.

查询"DSPIC33FJ12MC02ESP"供应商

9.0 I/O PORTS

Note:	This data sheet summarizes the features of the dsPIC33FJ12MC201/202 devices. It is not intended to be a comprehensive reference source. To complement the information in this data sheet, refer to the *"dsPIC33F Family Reference Manual"*. Please see the Microchip web site (www.microchip.com) for the latest dsPIC33F Family Reference Manual chapters.

All of the device pins (except VDD, VSS, $\overline{\text{MCLR}}$ and OSC1/CLKI) are shared among the peripherals and the parallel I/O ports. All I/O input ports feature Schmitt Trigger inputs for improved noise immunity.

9.1 Parallel I/O (PIO) Ports

Generally a parallel I/O port that shares a pin with a peripheral is subservient to the peripheral. The peripheral's output buffer data and control signals are provided to a pair of multiplexers. The multiplexers select whether the peripheral or the associated port has ownership of the output data and control signals of the I/O pin. The logic also prevents "loop through," in which a port's digital output can drive the input of a peripheral that shares the same pin. Figure 9-1 shows how ports are shared with other peripherals and the associated I/O pin to which they are connected.

When a peripheral is enabled and the peripheral is actively driving an associated pin, the use of the pin as a general purpose output pin is disabled. The I/O pin can be read, but the output driver for the parallel port bit is disabled. If a peripheral is enabled, but the peripheral is not actively driving a pin, that pin can be driven by a port.

All port pins have three registers directly associated with their operation as digital I/O. The data direction register (TRISx) determines whether the pin is an input or an output. If the data direction bit is a '1', then the pin is an input. All port pins are defined as inputs after a Reset. Reads from the latch (LATx) read the latch. Writes to the latch write the latch. Reads from the port (PORTx) read the port pins, while writes to the port pins write the latch.

Any bit and its associated data and control registers that are not valid for a particular device will be disabled. That means the corresponding LATx and TRISx registers and the port pin will read as zeros.

When a pin is shared with another peripheral or function that is defined as an input only, it is nevertheless regarded as a dedicated port because there is no other competing source of outputs.

FIGURE 9-1: BLOCK DIAGRAM OF A TYPICAL SHARED PORT STRUCTURE

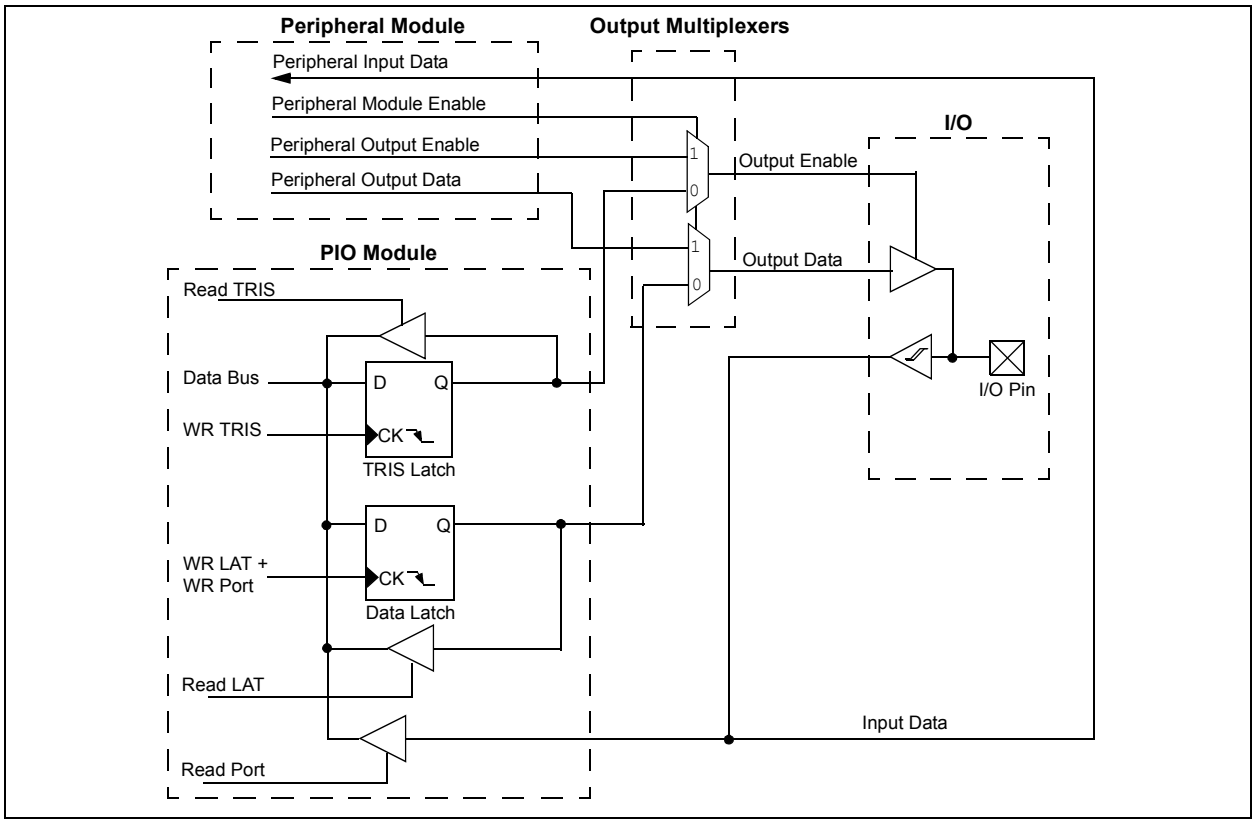

查询"DSPIC33FJ12MC02ESP"供应商

9.1.1 OPEN-DRAIN CONFIGURATION

In addition to the PORT, LAT and TRIS registers for data control, each port pin can also be individually configured for either digital or open-drain output. This is controlled by the Open-Drain Control register, ODCx, associated with each port. Setting any of the bits configures the corresponding pin to act as an open-drain output.

The open-drain feature allows the generation of outputs higher than VDD (e.g., 5V) on any desired digital-only pins by using external pull-up resistors. The maximum open-drain voltage allowed is the same as the maximum VIH specification.

9.2 Configuring Analog Port Pins

The AD1PCFG and TRIS registers control the operation of the analog-to-digital (A/D) port pins. The port pins that are to function as analog inputs must have their corresponding TRIS bit set (input). If the TRIS bit is cleared (output), the digital output level (VOH or VOL) will be converted.

When the PORT register is read, all pins configured as analog input channels will read as cleared (a low level).

Pins configured as digital inputs will not convert an analog input. Analog levels on any pin defined as a digital input (including the ANx pins) can cause the input buffer to consume current that exceeds the device specifications.

9.2.1 I/O PORT WRITE/READ TIMING

One instruction cycle is required between a port direction change or port write operation and a read operation of the same port. Typically this instruction would be an NOP. An example is shown in Example 9-1.

9.3 Input Change Notification

The input change notification function of the I/O ports allows the dsPIC33FJ12MC201/202 devices to generate interrupt requests to the processor in response to a change-of-state on selected input pins. This feature can detect input change-of-states even in Sleep mode, when the clocks are disabled. Depending on the device pin count, up to 21 external signals (CNx pin) can be selected (enabled) for generating an interrupt request on a change-of-state.

Four control registers are associated with the CN module. The CNEN1 and CNEN2 registers contain the interrupt enable control bits for each of the CN input pins. Setting any of these bits enables a CN interrupt for the corresponding pins.

Each CN pin also has a weak pull-up connected to it. The pull-ups act as a current source connected to the pin, and eliminate the need for external resistors when push-button or keypad devices are connected. The pull-ups are enabled separately using the CNPU1 and CNPU2 registers, which contain the control bits for each of the CN pins. Setting any of the control bits enables the weak pull-ups for the corresponding pins.

Note:	Pull-ups on change notification pins should always be disabled when the port pin is configured as a digital output.

EXAMPLE 9-1: PORT WRITE/READ EXAMPLE

```
MOV   0xFF00, W0          ; Configure PORTB<15:8> as inputs
MOV   W0, TRISBB          ; and PORTB<7:0> as outputs
NOP                       ; Delay 1 cycle
btss  PORTB, #13          ; Next Instruction
```

 © 2007 Microchip Technology Inc.

查询"DSPIC33FJ12MC02ESP"供应商

9.4 Peripheral Pin Select

Peripheral pin select configuration enables peripheral set selection and placement on a wide range of I/O pins. By increasing the pinout options available on a particular device, programmers can better tailor the microcontroller to their entire application, rather than trimming the application to fit the device.

The peripheral pin select configuration feature operates over a fixed subset of digital I/O pins. Programmers can independently map the input and/or output of most digital peripherals to any one of these I/O pins. Peripheral pin select is performed in software, and generally does not require the device to be reprogrammed. Hardware safeguards are included that prevent accidental or spurious changes to the peripheral mapping, once it has been established.

9.4.1 AVAILABLE PINS

The peripheral pin select feature is used with a range of up to 16 pins. The number of available pins depends on the particular device and its pin count. Pins that support the peripheral pin select feature include the designation “RPn” in their full pin designation, where “RP” designates a remappable peripheral and “n” is the remappable pin number.

9.4.2 AVAILABLE PERIPHERALS

The peripherals managed by the peripheral pin select feature are all digital-only peripherals. These include:

- General serial communications (UART and SPI)
- General purpose timer clock inputs
- Timer-related peripherals (input capture and output compare)
- Interrupt-on-change inputs

In comparison, some digital-only peripheral modules are never included in the peripheral pin select feature. This is because the peripheral’s function requires special I/O circuitry on a specific port and cannot be easily connected to multiple pins. These modules include I^2C. A similar requirement excludes all modules with analog inputs, such as the Analog-to-Digital Converter (ADC).

Remappable peripherals are not associated with a default I/O pin. The peripheral must always be assigned to a specific I/O pin before it can be used. In contrast, non remappable peripherals are always available on a default pin, assuming that the peripheral is active and not conflicting with another peripheral.

9.4.2.1 Peripheral Pin Select Function Priority

When a remappable peripheral is active on a given I/O pin, it takes priority over all other digital I/O and digital communication peripherals associated with the pin. Priority is given regardless of the type of peripheral that is mapped. Remappable peripherals never take priority over any analog functions associated with the pin.

9.4.3 CONTROLLING PERIPHERAL PIN SELECT

Peripheral pin select features are controlled through two sets of special function registers: one to map peripheral inputs, and one to map outputs. Because they are separately controlled, a particular peripheral’s input and output (if the peripheral has both) can be placed on any selectable function pin without constraint.

The association of a peripheral to a peripheral selectable pin is handled in two different ways, depending on whether an input or output is being mapped.

9.4.3.1 Input Mapping

The inputs of the peripheral pin select options are mapped on the basis of the peripheral. A control register associated with a peripheral dictates the pin it will be mapped to. The RPINRx registers are used to configure peripheral input mapping (see Register 9-1 through Register 9-13). Each register contains sets of 5-bit fields, with each set associated with one of the remappable peripherals. Programming a given peripheral’s bit field with an appropriate 5-bit value maps the RPn pin with that value to that peripheral. For any given device, the valid range of values for any bit field corresponds to the maximum number of peripheral pin selections supported by the device.

Figure 9-2 Illustrates remappable pin selection for U1RX input.

查询"DSPIC33FJ12MC02ESP"供应商

FIGURE 9-2: REMAPPABLE MUX INPUT FOR U1RX

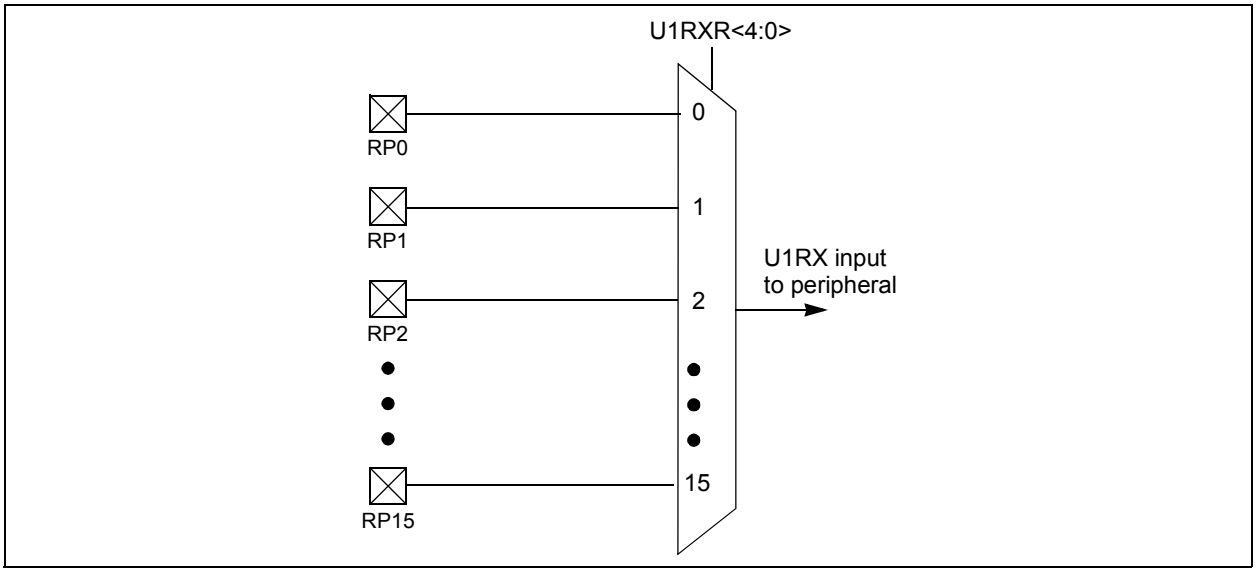

TABLE 9-1: SELECTABLE INPUT SOURCES (MAPS INPUT TO FUNCTION)(1)

Input Name	Function Name	Register	Configuration Bits
External Interrupt 1	INT1	RPINR0	INT1R<4:0>
External Interrupt 2	INT2	RPINR1	INT2R<4:0>
Timer 2 External Clock	T2CK	RPINR3	T2CKR<4:0>
Timer 3 External Clock	T3CK	RPINR3	T3CKR<4:0>
Input Capture 1	IC1	RPINR7	IC1R<4:0>
Input Capture 2	IC2	RPINR7	IC2R<4:0>
Input Capture 7	IC7	RPINR10	IC7R<4:0>
Input Capture 8	IC8	RPINR10	IC8R<4:0>
Output Compare Fault A	OCFA	RPINR11	OCFAR<4:0>
PWM1 Fault	$\overline{\text{FLTA1}}$	RPINR12	FLTA1R<4:0>
PWM2 Fault	$\overline{\text{FLTA2}}$	RPINR13	FLTA2R<4:0>
QEI Phase A	QEA	RPINR14	QEAR<4:0>
QEI Phase B	QEB	RPINR14	QEBR<4:0>
QEI Index	INDX	RPINR15	INDXR<4:0>
UART1 Receive	U1RX	RPINR18	U1RXR<4:0>
UART1 Clear To Send	$\overline{\text{U1CTS}}$	RPINR18	U1CTSR<4:0>
SPI1 Data Input	SDI1	RPINR20	SDI1R<4:0>
SPI1 Clock Input	SCK1	RPINR20	SCK1R<4:0>
SPI1 Slave Select Input	$\overline{\text{SS1}}$	RPINR21	SS1R<4:0>

Note 1: Unless otherwise noted, all inputs use the Schmitt input buffers.

 © 2007 Microchip Technology Inc.

查询"DSPIC33FJ12MC02ESP"供应商

9.4.3.2 Output Mapping

In contrast to inputs, the outputs of the peripheral pin select options are mapped on the basis of the pin. In this case, a control register associated with a particular pin dictates the peripheral output to be mapped. The RPORx registers are used to control output mapping. Like the RPINRx registers, each register contains sets of 5-bit fields, with each set associated with one RPn pin (see Register 9-14 through Register 9-21). The value of the bit field corresponds to one of the peripherals, and that peripheral's output is mapped to the pin (see Table 9-2 and Figure 9-3).

The list of peripherals for output mapping also includes a null value of 00000 because of the mapping technique. This permits any given pin to remain unconnected from the output of any of the pin selectable peripherals.

FIGURE 9-3: MULTIPLEXING OF REMAPPABLE OUTPUT FOR RPn

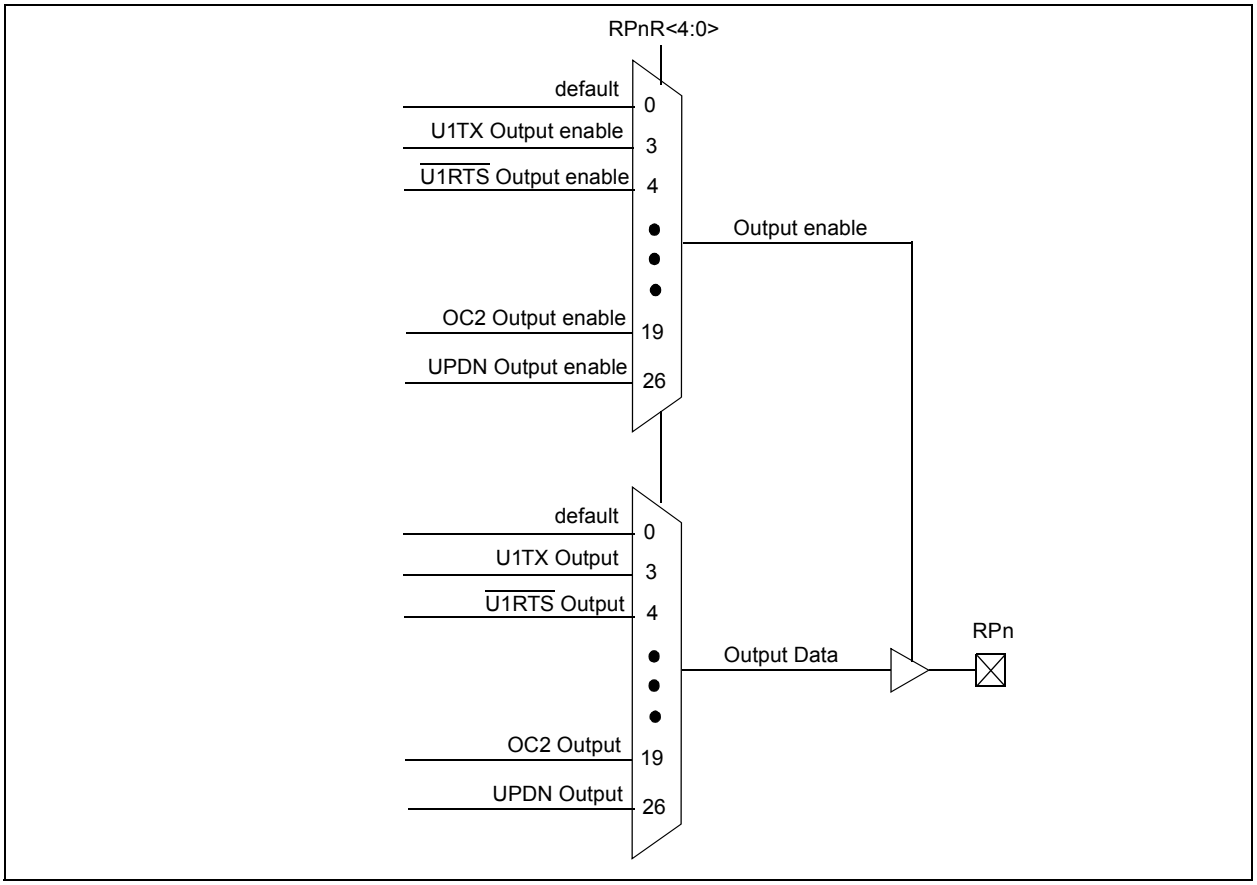

TABLE 9-2: OUTPUT SELECTION FOR REMAPPABLE PIN (RPn)

Function	RPnR<4:0>	Output Name
NULL	00000	RPn tied to default port pin
U1TX	00011	RPn tied to UART1 Transmit
$\overline{\text{U1RTS}}$	00100	RPn tied to UART1 Ready To Send
SDO1	00111	RPn tied to SPI1 Data Output
SCK1OUT	01000	RPn tied to SPI1 Clock Output
SS1OUT	01001	RPn tied to SPI1 Slave Select Output
OC1	10010	RPn tied to Output Compare 1
OC2	10011	RPn tied to Output Compare 2
UPDN	11010	RPn tied to QEI direction (UPDN) status

查询"DSPIC33FJ12MC02ESP"供应商

9.4.3.3 Peripheral Mapping

The control schema of peripheral select pins is not limited to a small range of fixed peripheral configurations. There are no mutual or hardware-enforced lockouts between any of the peripheral mapping SFRs. Literally any combination of peripheral mappings across any or all of the RPn pins is possible. This includes both many-to-one and one-to-many mappings of peripheral inputs and outputs to pins.

While such mappings may be technically possible from a configuration point of view, they may not be supportable electrically.

9.4.4 CONTROLLING CONFIGURATION CHANGES

Because peripheral remapping can be changed during run time, some restrictions on peripheral remapping are needed to prevent accidental configuration changes. dsPIC33F devices include three features to prevent alterations to the peripheral map:

- Control register lock sequence
- Continuous state monitoring
- Configuration bit pin select lock

9.4.4.1 Control Register Lock

Under normal operation, writes to the RPINRx and RPORx registers are not allowed. Attempted writes appear to execute normally, but the contents of the registers remain unchanged. To change these registers, they must be unlocked in hardware. The register lock is controlled by the IOLOCK bit (OSCCON<6>). Setting IOLOCK prevents writes to the control registers; clearing IOLOCK allows writes.

To set or clear IOLOCK, a specific command sequence must be executed:

1. Write 0x46 to OSCCON<7:0>.
2. Write 0x57 to OSCCON<7:0>.
3. Clear (or set) IOLOCK as a single operation.

> **Note:** MPLAB® C30 provides built-in C language functions for unlocking the OSCCON register:
>
> ```
> __builtin_write_OSCCONL(value)
> __builtin_write_OSCCONH(value)
> ```
>
> See MPLAB IDE Help for more information.

Unlike the similar sequence with the oscillator's LOCK bit, IOLOCK remains in one state until changed. This allows all of the peripheral pin selects to be configured with a single unlock sequence followed by an update to all control registers, then locked with a second lock sequence.

9.4.4.2 Continuous State Monitoring

In addition to being protected from direct writes, the contents of the RPINRx and RPORx registers are constantly monitored in hardware by shadow registers. If an unexpected change in any of the registers occurs (such as cell disturbances caused by ESD or other external events), a configuration mismatch Reset will be triggered.

9.4.4.3 Configuration Bit Pin Select Lock

As an additional level of safety, the device can be configured to prevent more than one write session to the RPINRx and RPORx registers. The IOL1WAY (FOSC<IOL1WAY>) configuration bit blocks the IOLOCK bit from being cleared after it has been set once. If IOLOCK remains set, the register unlock procedure will not execute, and the peripheral pin select control registers cannot be written to. The only way to clear the bit and re-enable peripheral remapping is to perform a device Reset.

In the default (unprogrammed) state, IOL1WAY is set, restricting users to one write session. Programming IOL1WAY allows user applications unlimited access (with the proper use of the unlock sequence) to the peripheral pin select registers.

9.4.5 CONSIDERATIONS FOR PERIPHERAL PIN SELECTION

The ability to control peripheral pin selection introduces several considerations into application design, including several common peripherals that are available only as remappable peripherals.

9.4.5.1 Initialization and Locks

The main consideration is that the peripheral pin selects are not available on default pins in the device's default (reset) state. More specifically, since all RPINRx and RPORx registers reset to 0000h, this means all peripheral pin select inputs are tied to RP0, while all peripheral pin select outputs are disconnected. This means that before any other application code is executed, the user application must initialize the device with the proper peripheral configuration.

Since the IOLOCK bit resets in the unlocked state, it is not necessary to execute the unlock sequence after the device has come out of Reset. For the sake of application safety, however, it is always a good idea to set IOLOCK and lock the configuration after writing to the control registers.

The unlock sequence must be executed as an assembly-language routine, in the same manner as changes to the oscillator configuration, because the unlock sequence is timing-critical. If the bulk of the application is written in C or another high-level language, the unlock sequence should be performed by writing inline assembler.

 © 2007 Microchip Technology Inc.

查询"DSPIC33FJ12MC02ESP"供应商

9.4.5.2 Choosing the Configuration

Choosing the configuration requires review of all peripheral pin selects and their pin assignments, especially those that will not be used in the application. In all cases, unused pin selectable peripherals should be disabled completely. Unused peripherals should have their inputs assigned to an unused RPn pin function. I/O pins with unused RPn functions should be configured with the null peripheral output.

The assignment of a peripheral to a particular pin does not automatically perform any other configuration of the pin's I/O circuitry. This means adding a pin selectable output to a pin can inadvertently drive an existing peripheral input when the output is driven. Programmers must be familiar with the behavior of other fixed peripherals that share a remappable pin, and know when to enable or disable them. To be safe, fixed digital peripherals that share the same pin should be disabled when not in use.

9.4.5.3 Pin Operation

Configuring a remappable pin for a specific peripheral does not automatically turn that feature on. The peripheral must be specifically configured for operation and enabled, as if it were tied to a fixed pin. Where this happens in the application code (immediately following device Reset and peripheral configuration, or inside the main application routine) depends on the peripheral and its use in the application.

9.4.5.4 Analog Functions

A final consideration is that peripheral pin select functions neither override analog inputs nor reconfigure pins with analog functions for digital I/O. If a pin is configured as an analog input on device Reset, it must be explicitly reconfigured as digital I/O when used with a peripheral pin select.

9.4.5.5 Configuration Example

Example 9-2 shows a configuration for bidirectional communication with flow control using UART1. The following input and output functions are used:

- Input Functions: U1RX, $\overline{\text{U1CTS}}$
- Output Functions: U1TX, $\overline{\text{U1RTS}}$

EXAMPLE 9-2: CONFIGURING UART1 INPUT AND OUTPUT FUNCTIONS

```
//***************************************
// Unlock Registers
//***************************************
asm volatile ( "mov #OSCCONL, w1  \n"
               "mov #0x46, w2     \n"
               "mov #0x57, w3     \n"
               "mov.b w2, [w1]    \n"
               "mov.b w3, [w1]    \n"
               "bclr OSCCON, 6");

//****************************
// Configure Input Functions
// (See Table 9-1)
//****************************
    //****************************
    // Assign U1Rx To Pin RP0
    //****************************
    RPINR18bits.U1RXR = 0;

    //****************************
    // Assign U1CTS To Pin RP1
    //****************************
    RPINR18bits.U1CTSR = 1;

//****************************
// Configure Output Functions
// (See Table 9-2)
//****************************
    //****************************
    // Assign U1Tx To Pin RP2
    //****************************
    RPOR1bits.RP2R = 3;

    //****************************
    // Assign U1RTS To Pin RP3
    //****************************
    RPOR1bits.RP3R = 4;

//***************************************
// Lock Registers
//***************************************
asm volatile ( "mov #OSCCONL, w1  \n"
               "mov #0x46, w2     \n"
               "mov #0x57, w3     \n"
               "mov.b w2, [w1]    \n"
               "mov.b w3, [w1]    \n"
               "bset OSCCON, 6");
```

查询"DSPIC33FJ12MC02ESP"供应商

9.5 Peripheral Pin Select Registers

The dsPIC33FJ12MC201/202 family of devices implement 21 registers for remappable peripheral configuration:

- Input Remappable Peripheral Registers (13)
- Output Remappable Peripheral Registers (8)

Note:	Input and Output Register values can only be changed if OSCCON[IOLOCK] = 0. See **Section 9.4.4.1 "Control Register Lock"** for a specific command sequence.

REGISTER 9-1: RPINR0: PERIPHERAL PIN SELECT INPUT REGISTER 0

U-0	U-0	U-0	R/W-1	R/W-1	R/W-1	R/W-1	R/W-1
—	—	—	INT1R<4:0>				
bit 15							bit 8

U-0	U-0	U-0	U-0	U-0	U-0	U-0	U-0
—	—	—	—	—	—	—	—
bit 7							bit 0

Legend:			
R = Readable bit	W = Writable bit	U = Unimplemented bit, read as '0'	
-n = Value at POR	'1' = Bit is set	'0' = Bit is cleared	x = Bit is unknown

bit 15-13 **Unimplemented:** Read as '0'

bit 12-8 **INT1R<4:0>:** Assign External Interrupt 1 (INTR1) to the corresponding RPn pin
11111 = Input tied Vss
01111 = Input tied to RP15
.
.
.
00001 = Input tied to RP1
00000 = Input tied to RP0

bit 7-0 **Unimplemented:** Read as '0'

 © 2007 Microchip Technology Inc.

查询"DSPIC33FJ12MC02ESP"供应商

REGISTER 9-2: RPINR1: PERIPHERAL PIN SELECT INPUT REGISTER 1

U-0	U-0	U-0	U-0	U-0	U-0	U-0	U-0
—	—	—	—	—	—	—	—
bit 15							bit 8

U-0	U-0	U-0	R/W-1	R/W-1	R/W-1	R/W-1	R/W-1
—	—	—	INT2R<4:0>				
bit 7							bit 0

Legend:			
R = Readable bit	W = Writable bit	U = Unimplemented bit, read as ‘0’	
-n = Value at POR	‘1’ = Bit is set	‘0’ = Bit is cleared	x = Bit is unknown

bit 15-5 **Unimplemented:** Read as ‘0’

bit 4-0 **INTR2R<4:0>:** Assign External Interrupt 2 (INTR2) to the corresponding RPn pin

11111 = Input tied Vss
01111 = Input tied to RP15
.
.
.
00001 = Input tied to RP1
00000 = Input tied to RP0

查询"DSPIC33FJ12MC02ESP"供应商

REGISTER 9-3: RPINR3: PERIPHERAL PIN SELECT INPUT REGISTER 3

U-0	U-0	U-0	R/W-1	R/W-1	R/W-1	R/W-1	R/W-1
—	—	—	T3CKR<4:0>				
bit 15							bit 8

U-0	U-0	U-0	R/W-1	R/W-1	R/W-1	R/W-1	R/W-1
—	—	—	T2CKR<4:0>				
bit 7							bit 0

Legend:			
R = Readable bit	W = Writable bit	U = Unimplemented bit, read as ‘0’	
-n = Value at POR	‘1’ = Bit is set	‘0’ = Bit is cleared	x = Bit is unknown

bit 15-13 **Unimplemented:** Read as ‘0’

bit 12-8 **T3CKR<4:0>:** Assign Timer3 External Clock (T3CK) to the corresponding RPn pin
11111 = Input tied Vss
01111 = Input tied to RP15
.
.
.
00001 = Input tied to RP1
00000 = Input tied to RP0

bit 7-5 **Unimplemented:** Read as ‘0’

bit 4-0 **T2CKR<4:0>:** Assign Timer2 External Clock (T2CK) to the corresponding RPn pin
11111 = Input tied Vss
01111 = Input tied to RP15
.
.
.
00001 = Input tied to RP1
00000 = Input tied to RP0

 © 2007 Microchip Technology Inc.

查询"DSPIC33FJ12MC02ESP"供应商

REGISTER 9-4: RPINR7: PERIPHERAL PIN SELECT INPUT REGISTER 7

U-0	U-0	U-0	R/W-1	R/W-1	R/W-1	R/W-1	R/W-1
—	—	—	IC2R<4:0>				
bit 15							bit 8

U-0	U-0	U-0	R/W-1	R/W-1	R/W-1	R/W-1	R/W-1
—	—	—	IC1R<4:0>				
bit 7							bit 0

Legend:			
R = Readable bit	W = Writable bit	U = Unimplemented bit, read as ‘0’	
-n = Value at POR	‘1’ = Bit is set	‘0’ = Bit is cleared	x = Bit is unknown

bit 15-13 **Unimplemented:** Read as ‘0’

bit 12-8 **IC2R<4:0>:** Assign Input Capture 2 (IC2) to the corresponding RPn pin

11111 = Input tied Vss
01111 = Input tied to RP15
.
.
.
00001 = Input tied to RP1
00000 = Input tied to RP0

bit 7-5 **Unimplemented:** Read as ‘0’

bit 4-0 **IC1R<4:0>:** Assign Input Capture 1 (IC1) to the corresponding RPn pin

11111 = Input tied Vss
01111 = Input tied to RP15
.
.
.
00001 = Input tied to RP1
00000 = Input tied to RP0

查询"DSPIC33FJ12MC02ESP"供应商

REGISTER 9-5: RPINR10: PERIPHERAL PIN SELECT INPUT REGISTERS 10

U-0	U-0	U-0	R/W-1	R/W-1	R/W-1	R/W-1	R/W-1
—	—	—	IC8R<4:0>				
bit 15							bit 8

U-0	U-0	U-0	R/W-1	R/W-1	R/W-1	R/W-1	R/W-1
—	—	—	IC7R<4:0>				
bit 7							bit 0

Legend:			
R = Readable bit	W = Writable bit	U = Unimplemented bit, read as ‘0’	
-n = Value at POR	‘1’ = Bit is set	‘0’ = Bit is cleared	x = Bit is unknown

bit 15-13 **Unimplemented:** Read as ‘0’

bit 12-8 **IC8R<4:0>:** Assign Input Capture 8 (IC8) to the corresponding pin RPn pin

11111 = Input tied Vss
01111 = Input tied to RP15
.
.
.
00001 = Input tied to RP1
00000 = Input tied to RP0

bit 7-5 **Unimplemented:** Read as ‘0’

bit 4-0 **IC7R<4:0>:** Assign Input Capture 7 (IC7) to the corresponding pin RPn pin

11111 = Input tied Vss
01111 = Input tied to RP15
.
.
.
00001 = Input tied to RP1
00000 = Input tied to RP0

 © 2007 Microchip Technology Inc.

查询"DSPIC33FJ12MC02ESP"供应商

REGISTER 9-6: RPINR11: PERIPHERAL PIN SELECT INPUT REGISTER 11

U-0	U-0	U-0	U-0	U-0	U-0	U-0	U-0
—	—	—	—	—	—	—	—
bit 15							bit 8

U-0	U-0	U-0	R/W-1	R/W-1	R/W-1	R/W-1	R/W-1
—	—	—	OCFAR<4:0>				
bit 7							bit 0

Legend:			
R = Readable bit	W = Writable bit	U = Unimplemented bit, read as ‘0’	
-n = Value at POR	‘1’ = Bit is set	‘0’ = Bit is cleared	x = Bit is unknown

bit 15-5 **Unimplemented:** Read as ‘0’

bit 4-0 **OCFAR<4:0>:** Assign Output Capture A (OCFA) to the corresponding RPn pin

11111 = Input tied Vss
01111 = Input tied to RP15
.
.
.
00001 = Input tied to RP1
00000 = Input tied to RP0

REGISTER 9-7: RPINR12: PERIPHERAL PIN SELECT INPUT REGISTER 12

U-0	U-0	U-0	U-0	U-0	U-0	U-0	U-0
—	—	—	—	—	—	—	—
bit 15							bit 8

U-0	U-0	U-0	R/W-1	R/W-1	R/W-1	R/W-1	R/W-1
—	—	—	FLTA1R<4:0>				
bit 7							bit 0

Legend:			
R = Readable bit	W = Writable bit	U = Unimplemented bit, read as ‘0’	
-n = Value at POR	‘1’ = Bit is set	‘0’ = Bit is cleared	x = Bit is unknown

bit 15-5 **Unimplemented:** Read as ‘0’

bit 4-0 **FLTA1R<4:0>:** Assign PWM1 Fault ($\overline{\text{FLTA1}}$) to the corresponding RPn pin

11111 = Input tied Vss
01111 = Input tied to RP15
.
.
.
00001 = Input tied to RP1
00000 = Input tied to RP0

查询"DSPIC33FJ12MC02ESP"供应商

REGISTER 9-8: RPINR13: PERIPHERAL PIN SELECT INPUT REGISTER 13

U-0	U-0	U-0	U-0	U-0	U-0	U-0	U-0
—	—	—	—	—	—	—	—
bit 15							bit 8

U-0	U-0	U-0	R/W-1	R/W-1	R/W-1	R/W-1	R/W-1
—	—	—	FLTA2R<4:0>				
bit 7							bit 0

Legend:			
R = Readable bit	W = Writable bit	U = Unimplemented bit, read as ‘0’	
-n = Value at POR	‘1’ = Bit is set	‘0’ = Bit is cleared	x = Bit is unknown

bit 15-5 **Unimplemented:** Read as ‘0’

bit 4-0 **FLTA2R<4:0>:** Assign PWM2 Fault ($\overline{\text{FLTA2}}$) to the corresponding RPn pin

11111 = Input tied Vss
01111 = Input tied to RP15
.
.
.
00001 = Input tied to RP1
00000 = Input tied to RP0

 © 2007 Microchip Technology Inc.

查询"DSPIC33FJ12MC02ESP"供应商

REGISTER 9-9: RPINR14: PERIPHERAL PIN SELECT OUTPUT REGISTERS 14

U-0	U-0	U-0	R/W-1	R/W-1	R/W-1	R/W-1	R/W-1
—	—	—	QEB1R<4:0>				
bit 15							bit 8

U-0	U-0	U-0	R/W-1	R/W-1	R/W-1	R/W-1	R/W-1
—	—	—	QEA1R<4:0>				
bit 7							bit 0

Legend:			
R = Readable bit	W = Writable bit	U = Unimplemented bit, read as ‘0’	
-n = Value at POR	‘1’ = Bit is set	‘0’ = Bit is cleared	x = Bit is unknown

bit 15-13 **Unimplemented:** Read as ‘0’

bit 12-8 **QEB1R<4:0>:** Assign B (QEB) to the corresponding pin

11111 = Input tied Vss
01111 = Input tied to RP15
.
.
.
00001 = Input tied to RP1
00000 = Input tied to RP0

bit 7-5 **Unimplemented:** Read as ‘0’

bit 4-0 **QEA1R<4:0>:** Assign A(QEA) to the corresponding pin

11111 = Input tied Vss
01111 = Input tied to RP15
.
.
.
00001 = Input tied to RP1
00000 = Input tied to RP0

查询"DSPIC33FJ12MC02ESP"供应商

REGISTER 9-10: RPINR15: PERIPHERAL PIN SELECT INPUT REGISTER 15

U-0	U-0	U-0	U-0	U-0	U-0	U-0	U-0
—	—	—	—	—	—	—	—
bit 15							bit 8

U-0	U-0	U-0	R/W-1	R/W-1	R/W-1	R/W-1	R/W-1
—	—	—	INDX1R<4:0>				
bit 7							bit 0

Legend:			
R = Readable bit	W = Writable bit	U = Unimplemented bit, read as ‘0’	
-n = Value at POR	‘1’ = Bit is set	‘0’ = Bit is cleared	x = Bit is unknown

bit 15-5 **Unimplemented:** Read as ‘0’

bit 4-0 **INDX1R<4:0>:** Assign QEI1 INDEX (INDX1) to the corresponding RPn pin

11111 = Input tied Vss
01111 = Input tied to RP15
.
.
.
00001 = Input tied to RP1
00000 = Input tied to RP0

 © 2007 Microchip Technology Inc.

查询"DSPIC33FJ12MC02ESP"供应商

REGISTER 9-11: RPINR18: PERIPHERAL PIN SELECT INPUT REGISTER 18

U-0	U-0	U-0	R/W-1	R/W-1	R/W-1	R/W-1	R/W-1
—	—	—	U1CTSR<4:0>				
bit 15							bit 8

U-0	U-0	U-0	R/W-1	R/W-1	R/W-1	R/W-1	R/W-1
—	—	—	U1RXR<4:0>				
bit 7							bit 0

Legend:			
R = Readable bit	W = Writable bit	U = Unimplemented bit, read as ‘0’	
-n = Value at POR	‘1’ = Bit is set	‘0’ = Bit is cleared	x = Bit is unknown

bit 15-13 **Unimplemented:** Read as ‘0’

bit 12-8 **U1CTSR<4:0>:** Assign UART1 Clear to Send ($\overline{\text{U1CTS}}$) to the corresponding RPn pin

11111 = Input tied Vss
01111 = Input tied to RP15
.
.
.
00001 = Input tied to RP1
00000 = Input tied to RP0

bit 7-5 **Unimplemented:** Read as ‘0’

bit 4-0 **U1RXR<4:0>:** Assign UART1 Receive (U1RX) to the corresponding RPn pin

11111 = Input tied Vss
01111 = Input tied to RP15
.
.
.
00001 = Input tied to RP1
00000 = Input tied to RP0

查询"DSPIC33FJ12MC02ESP"供应商

REGISTER 9-12: RPINR20: PERIPHERAL PIN SELECT INPUT REGISTER 20

U-0	U-0	U-0	R/W-1	R/W-1	R/W-1	R/W-1	R/W-1
—	—	—	SCK1R<4:0>				
bit 15							bit 8

U-0	U-0	U-0	R/W-1	R/W-1	R/W-1	R/W-1	R/W-1
—	—	—	SDI1R<4:0>				
bit 7							bit 0

Legend:			
R = Readable bit	W = Writable bit	U = Unimplemented bit, read as ‘0’	
-n = Value at POR	‘1’ = Bit is set	‘0’ = Bit is cleared	x = Bit is unknown

bit 15-13 **Unimplemented:** Read as ‘0’

bit 12-8 **SCK1R<4:0>:** Assign SPI1 Clock Input (SCK1IN) to the corresponding RPn pin

11111 = Input tied Vss
01111 = Input tied to RP15
.
.
.
00001 = Input tied to RP1
00000 = Input tied to RP0

bit 7-5 **Unimplemented:** Read as ‘0’

bit 4-0 **SDI1R<4:0>:** Assign SPI1 Data Input (SDI1) to the corresponding RPn pin

11111 = Input tied Vss
01111 = Input tied to RP15
.
.
.
00001 = Input tied to RP1
00000 = Input tied to RP0

 © 2007 Microchip Technology Inc.

查询"DSPIC33FJ12MC02ESP"供应商

REGISTER 9-13: RPINR21: PERIPHERAL PIN SELECT INPUT REGISTER 21

U-0	U-0	U-0	U-0	U-0	U-0	U-0	U-0
—	—	—	—	—	—	—	—
bit 15							bit 8

U-0	U-0	U-0	R/W-1	R/W-1	R/W-1	R/W-1	R/W-1
—	—	—	SS1R<4:0>				
bit 7							bit 0

Legend:			
R = Readable bit	W = Writable bit	U = Unimplemented bit, read as ‘0’	
-n = Value at POR	‘1’ = Bit is set	‘0’ = Bit is cleared	x = Bit is unknown

bit 15-5 **Unimplemented:** Read as ‘0’

bit 4-0 **SS1R<4:0>:** Assign SPI1 Slave Select Input (SS1IN) to the corresponding RPn pin

11111 = Input tied Vss
01111 = Input tied to RP15
.
.
.
00001 = Input tied to RP1
00000 = Input tied to RP0

查询"DSPIC33FJ12MC02ESP"供应商

REGISTER 9-14: RPOR0: PERIPHERAL PIN SELECT OUTPUT REGISTERS 0

U-0	U-0	U-0	R/W-0	R/W-0	R/W-0	R/W-0	R/W-0
—	—	—	RP1R<4:0>				
bit 15							bit 8

U-0	U-0	U-0	R/W-0	R/W-0	R/W-0	R/W-0	R/W-0
—	—	—	RP0R<4:0>				
bit 7							bit 0

Legend:			
R = Readable bit	W = Writable bit	U = Unimplemented bit, read as ‘0’	
-n = Value at POR	‘1’ = Bit is set	‘0’ = Bit is cleared	x = Bit is unknown

bit 15-13 **Unimplemented:** Read as ‘0’

bit 12-8 **RP1R<4:0>:** Peripheral Output Function is Assigned to RP1 Output Pin bits (see Table 9-2 for peripheral function numbers)

bit 7-5 **Unimplemented:** Read as ‘0’

bit 4-0 **RP0R<4:0>:** Peripheral Output Function is Assigned to RP0 Output Pin bits (see Table 9-2 for peripheral function numbers)

REGISTER 9-15: RPOR1: PERIPHERAL PIN SELECT OUTPUT REGISTERS 1

U-0	U-0	U-0	R/W-0	R/W-0	R/W-0	R/W-0	R/W-0
—	—	—	RP3R<4:0>				
bit 15							bit 8

U-0	U-0	U-0	R/W-0	R/W-0	R/W-0	R/W-0	R/W-0
—	—	—	RP2R<4:0>				
bit 7							bit 0

Legend:			
R = Readable bit	W = Writable bit	U = Unimplemented bit, read as ‘0’	
-n = Value at POR	‘1’ = Bit is set	‘0’ = Bit is cleared	x = Bit is unknown

bit 15-13 **Unimplemented:** Read as ‘0’

bit 12-8 **RP3R<4:0>:** Peripheral Output Function is Assigned to RP3 Output Pin bits (see Table 9-2 for peripheral function numbers)

bit 7-5 **Unimplemented:** Read as ‘0’

bit 4-0 **RP2R<4:0>:** Peripheral Output Function is Assigned to RP2 Output Pin bits (see Table 9-2 for peripheral function numbers)

 © 2007 Microchip Technology Inc.

查询"DSPIC33FJ12MC02ESP"供应商

REGISTER 9-16: RPOR2: PERIPHERAL PIN SELECT OUTPUT REGISTERS 2

U-0	U-0	U-0	R/W-0	R/W-0	R/W-0	R/W-0	R/W-0
—	—	—	RP5R<4:0>				
bit 15							bit 8

U-0	U-0	U-0	R/W-0	R/W-0	R/W-0	R/W-0	R/W-0
—	—	—	RP4R<4:0>				
bit 7							bit 0

Legend:			
R = Readable bit	W = Writable bit	U = Unimplemented bit, read as ‘0’	
-n = Value at POR	‘1’ = Bit is set	‘0’ = Bit is cleared	x = Bit is unknown

bit 15-13 **Unimplemented:** Read as ‘0’

bit 12-8 **RP5R<4:0>:** Peripheral Output Function is Assigned to RP5 Output Pin bits (see Table 9-2 for peripheral function numbers)

bit 7-5 **Unimplemented:** Read as ‘0’

bit 4-0 **RP4R<4:0>:** Peripheral Output Function is Assigned to RP4 Output Pin bits (see Table 9-2 for peripheral function numbers)

REGISTER 9-17: RPOR3: PERIPHERAL PIN SELECT OUTPUT REGISTERS 3

U-0	U-0	U-0	R/W-0	R/W-0	R/W-0	R/W-0	R/W-0
—	—	—	RP7R<4:0>				
bit 15							bit 8

U-0	U-0	U-0	R/W-0	R/W-0	R/W-0	R/W-0	R/W-0
—	—	—	RP6R<4:0>				
bit 7							bit 0

Legend:			
R = Readable bit	W = Writable bit	U = Unimplemented bit, read as ‘0’	
-n = Value at POR	‘1’ = Bit is set	‘0’ = Bit is cleared	x = Bit is unknown

bit 15-13 **Unimplemented:** Read as ‘0’

bit 12-8 **RP7R<4:0>:** Peripheral Output Function is Assigned to RP7 Output Pin bits (see Table 9-2 for peripheral function numbers)

bit 7-5 **Unimplemented:** Read as ‘0’

bit 4-0 **RP6R<4:0>:** Peripheral Output Function is Assigned to RP6 Output Pin bits (see Table 9-2 for peripheral function numbers)

查询"DSPIC33FJ12MC02ESP"供应商

REGISTER 9-18: RPOR4: PERIPHERAL PIN SELECT OUTPUT REGISTERS 0

U-0	U-0	U-0	R/W-0	R/W-0	R/W-0	R/W-0	R/W-0
—	—	—	RP9R<4:0>				
bit 15							bit 8

U-0	U-0	U-0	R/W-0	R/W-0	R/W-0	R/W-0	R/W-0
—	—	—	RP8R<4:0>				
bit 7							bit 0

Legend:			
R = Readable bit	W = Writable bit	U = Unimplemented bit, read as ‘0’	
-n = Value at POR	‘1’ = Bit is set	‘0’ = Bit is cleared	x = Bit is unknown

bit 15-13 **Unimplemented:** Read as ‘0’

bit 12-8 **RP9R<4:0>:** Peripheral Output Function is Assigned to RP9 Output Pin bits (see Table 9-2 for peripheral function numbers)

bit 7-5 **Unimplemented:** Read as ‘0’

bit 4-0 **RP8R<4:0>:** Peripheral Output Function is Assigned to RP8 Output Pin bits (see Table 9-2 for peripheral function numbers)

REGISTER 9-19: RPOR5: PERIPHERAL PIN SELECT OUTPUT REGISTERS 5

U-0	U-0	U-0	R/W-0	R/W-0	R/W-0	R/W-0	R/W-0
—	—	—	RP11R<4:0>				
bit 15							bit 8

U-0	U-0	U-0	R/W-0	R/W-0	R/W-0	R/W-0	R/W-0
—	—	—	RP10R<4:0>				
bit 7							bit 0

Legend:			
R = Readable bit	W = Writable bit	U = Unimplemented bit, read as ‘0’	
-n = Value at POR	‘1’ = Bit is set	‘0’ = Bit is cleared	x = Bit is unknown

bit 15-13 **Unimplemented:** Read as ‘0’

bit 12-8 **RP11R<4:0>:** Peripheral Output Function is Assigned to RP11 Output Pin bits (see Table 9-2 for peripheral function numbers)

bit 7-5 **Unimplemented:** Read as ‘0’

bit 4-0 **RP10R<4:0>:** Peripheral Output Function is Assigned to RP10 Output Pin bits (see Table 9-2 for peripheral function numbers)

 © 2007 Microchip Technology Inc.

查询"DSPIC33FJ12MC02ESP"供应商

REGISTER 9-20: RPOR6: PERIPHERAL PIN SELECT OUTPUT REGISTERS 6

U-0	U-0	U-0	R/W-0	R/W-0	R/W-0	R/W-0	R/W-0
—	—	—	RP13R<4:0>				
bit 15							bit 8

U-0	U-0	U-0	R/W-0	R/W-0	R/W-0	R/W-0	R/W-0
—	—	—	RP12R<4:0>				
bit 7							bit 0

Legend:			
R = Readable bit	W = Writable bit	U = Unimplemented bit, read as ‘0’	
-n = Value at POR	‘1’ = Bit is set	‘0’ = Bit is cleared	x = Bit is unknown

bit 15-13 **Unimplemented:** Read as ‘0’

bit 12-8 **RP13R<4:0>:** Peripheral Output Function is Assigned to RP13 Output Pin bits (see Table 9-2 for peripheral function numbers)

bit 7-5 **Unimplemented:** Read as ‘0’

bit 4-0 **RP12R<4:0>:** Peripheral Output Function is Assigned to RP12 Output Pin bits (see Table 9-2 for peripheral function numbers)

REGISTER 9-21: RPOR7: PERIPHERAL PIN SELECT OUTPUT REGISTERS 7

U-0	U-0	U-0	R/W-0	R/W-0	R/W-0	R/W-0	R/W-0
—	—	—	RP15R<4:0>				
bit 15							bit 8

U-0	U-0	U-0	R/W-0	R/W-0	R/W-0	R/W-0	R/W-0
—	—	—	RP14R<4:0>				
bit 7							bit 0

Legend:			
R = Readable bit	W = Writable bit	U = Unimplemented bit, read as ‘0’	
-n = Value at POR	‘1’ = Bit is set	‘0’ = Bit is cleared	x = Bit is unknown

bit 15-13 **Unimplemented:** Read as ‘0’

bit 12-8 **RP15R<4:0>:** Peripheral Output Function is Assigned to RP15 Output Pin bits (see Table 9-2 for peripheral function numbers)

bit 7-5 **Unimplemented:** Read as ‘0’

bit 4-0 **RP14R<4:0>:** Peripheral Output Function is Assigned to RP14 Output Pin bits (see Table 9-2 for peripheral function numbers)

查询"DSPIC33FJ12MC02ESP"供应商

NOTES:

 © 2007 Microchip Technology Inc.

查询"DSPIC33FJ12MC02ESP"供应商

10.0 TIMER1

Note: This data sheet summarizes the features of the dsPIC33FJ12MC201/202 devices. It is not intended to be a comprehensive reference source. To complement the information in this data sheet, refer to the *"dsPIC33F Family Reference Manual"*. Please see the Microchip web site (www.microchip.com) for the latest dsPIC33F Family Reference Manual chapters.

The Timer1 module is a 16-bit timer, which can serve as the time counter for the real-time clock, or operate as a free-running interval timer/counter. Timer1 can operate in three modes:

- 16-bit Timer
- 16-bit Synchronous Counter
- 16-bit Asynchronous Counter

Timer1 also supports these features:

- Timer gate operation
- Selectable prescaler settings
- Timer operation during CPU Idle and Sleep modes
- Interrupt on 16-bit Period register match or falling edge of external gate signal

Figure 10-1 presents a block diagram of the 16-bit timer module.

To configure Timer1 for operation:

1. Set the TON bit (= 1) in the T1CON register.
2. Select the timer prescaler ratio using the TCKPS<1:0> bits in the T1CON register.
3. Set the Clock and Gating modes using the TCS and TGATE bits in the T1CON register.
4. Set or clear the TSYNC bit in T1CON to select synchronous or asynchronous operation.
5. Load the timer period value into the PR1 register.
6. If interrupts are required, set the interrupt enable bit, T1IE. Use the priority bits, T1IP<2:0>, to set the interrupt priority.

FIGURE 10-1: 16-BIT TIMER1 MODULE BLOCK DIAGRAM

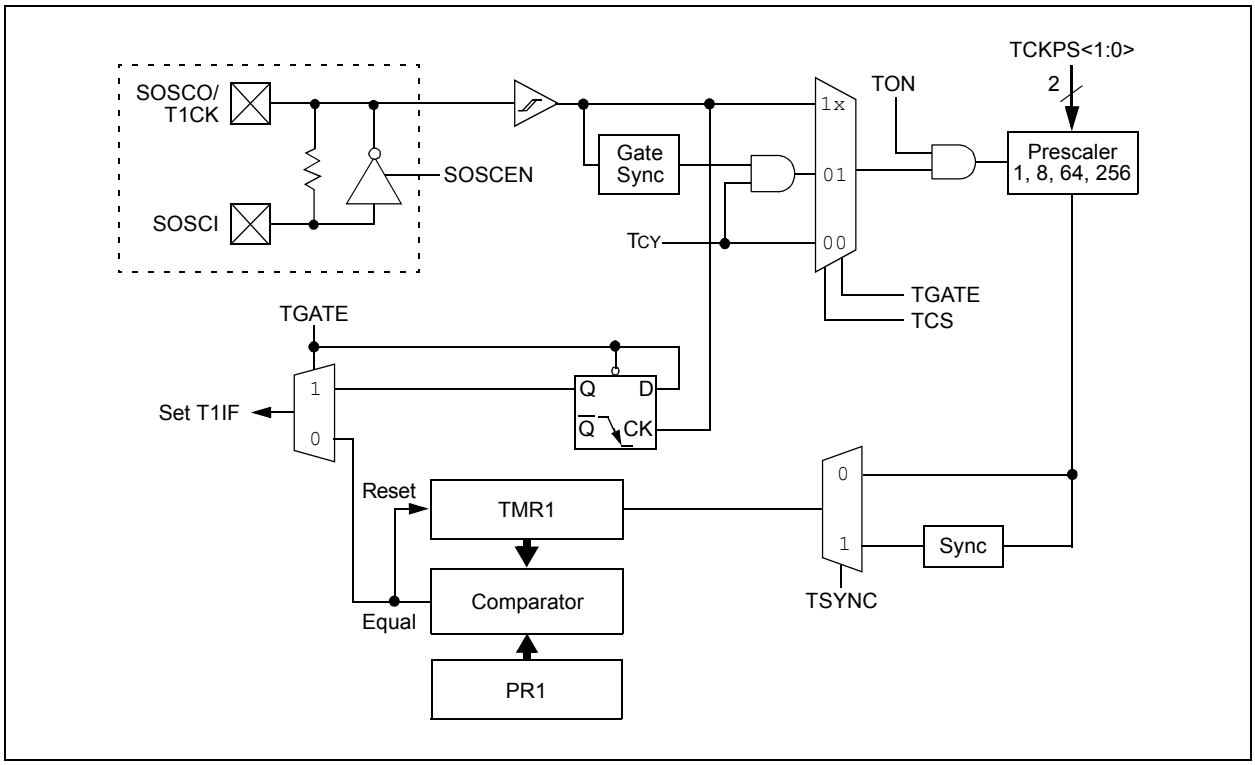

查询"DSPIC33FJ12MC02ESP"供应商

REGISTER 10-1: T1CON: TIMER1 CONTROL REGISTER

R/W-0	U-0	R/W-0	U-0	U-0	U-0	U-0	U-0
TON	—	TSIDL	—	—	—	—	—
bit 15							bit 8

U-0	R/W-0	R/W-0	R/W-0	U-0	R/W-0	R/W-0	U-0
—	TGATE	TCKPS<1:0>		—	TSYNC	TCS	—
bit 7							bit 0

Legend:			
R = Readable bit	W = Writable bit	U = Unimplemented bit, read as ‘0’	
-n = Value at POR	‘1’ = Bit is set	‘0’ = Bit is cleared	x = Bit is unknown

bit 15 **TON:** Timer1 On bit
1 = Starts 16-bit Timer1
0 = Stops 16-bit Timer1

bit 14 **Unimplemented:** Read as ‘0’

bit 13 **TSIDL:** Stop in Idle Mode bit
1 = Discontinue module operation when device enters Idle mode
0 = Continue module operation in Idle mode

bit 12-7 **Unimplemented:** Read as ‘0’

bit 6 **TGATE:** Timer1 Gated Time Accumulation Enable bit
When T1CS = 1:
This bit is ignored.
When T1CS = 0:
1 = Gated time accumulation enabled
0 = Gated time accumulation disabled

bit 5-4 **TCKPS<1:0>** Timer1 Input Clock Prescale Select bits
11 = 1:256
10 = 1:64
01 = 1:8
00 = 1:1

bit 3 **Unimplemented:** Read as ‘0’

bit 2 **TSYNC:** Timer1 External Clock Input Synchronization Select bit
When TCS = 1:
1 = Synchronize external clock input
0 = Do not synchronize external clock input
When TCS = 0:
This bit is ignored.

bit 1 **TCS:** Timer1 Clock Source Select bit
1 = External clock from pin T1CK (on the rising edge)
0 = Internal clock (FCY)

bit 0 **Unimplemented:** Read as ‘0’

 © 2007 Microchip Technology Inc.

查询"DSPIC33FJ12MC02ESP"供应商

11.0 TIMER2/3 FEATURE

Note:	This data sheet summarizes the features of the dsPIC33FJ12MC201/202 devices. It is not intended to be a comprehensive reference source. To complement the information in this data sheet, refer to the *"dsPIC33F Family Reference Manual"*. Please see the Microchip web site (www.microchip.com) for the latest dsPIC33F Family Reference Manual chapters.

The Timer2/3 feature has three 2-bit timers that can also be configured as two independent 16-bit timers with selectable operating modes.

As a 32-bit timer, the Timer2/3 feature permits operation in three modes:

- Two Independent 16-bit timers (e.g., Timer2 and Timer3) with all 16-bit operating modes (except Asynchronous Counter mode)
- Single 32-bit timer (Timer2/3)
- Single 32-bit synchronous counter (Timer2/3)

The Timer2/3 feature also supports:

- Timer gate operation
- Selectable prescaler settings
- Timer operation during Idle and Sleep modes
- Interrupt on a 32-bit period register match
- Time base for Input Capture and Output Compare modules (Timer2 and Timer3 only)
- ADC1 event trigger (Timer2/3 only)

Individually, all eight of the 16-bit timers can function as synchronous timers or counters. They also offer the features listed above, except for the event trigger. The operating modes and enabled features are determined by setting the appropriate bit(s) in the T2CON, T3CON registers. T2CON registers are shown in generic form in Register 11-1. T3CON registers are shown in Register 11-2.

For 32-bit timer/counter operation, Timer2 is the least significant word, and Timer3 is the most significant word of the 32-bit timers.

Note:	For 32-bit operation, T3CON control bits are ignored. Only T2CON control bits are used for setup and control. Timer2 clock and gate inputs are used for the 32-bit timer modules, but an interrupt is generated with the Timer3 interrupt flags.

11.1 32-bit Operation

To configure the Timer2/3 feature timers for 32-bit operation:

1. Set the T32 control bit.
2. Select the prescaler ratio for Timer2 using the TCKPS<1:0> bits.
3. Set the Clock and Gating modes using the corresponding TCS and TGATE bits.
4. Load the timer period value. PR3 contains the most significant word of the value, while PR2 contains the least significant word.
5. If interrupts are required, set the interrupt enable bit, T3IE. Use the priority bits, T3IP<2:0>, to set the interrupt priority. While Timer2 controls the timer, the interrupt appears as a Timer3 interrupt.
6. Set the corresponding TON bit.

The timer value at any point is stored in the register pair, TMR3:TMR2, which always contains the most significant word of the count, while TMR2 contains the least significant word.

11.2 16-bit Operation

To configure any of the timers for individual 16-bit operation:

1. Clear the T32 bit corresponding to that timer.
2. Select the timer prescaler ratio using the TCKPS<1:0> bits.
3. Set the Clock and Gating modes using the TCS and TGATE bits.
4. Load the timer period value into the PRx register.
5. If interrupts are required, set the interrupt enable bit, TxIE. Use the priority bits, TxIP<2:0>, to set the interrupt priority.
6. Set the TON bit.

查询"DSPIC33FJ12MC02ESP"供应商

FIGURE 11-1: TIMER2/3 (32-BIT) BLOCK DIAGRAM(1)

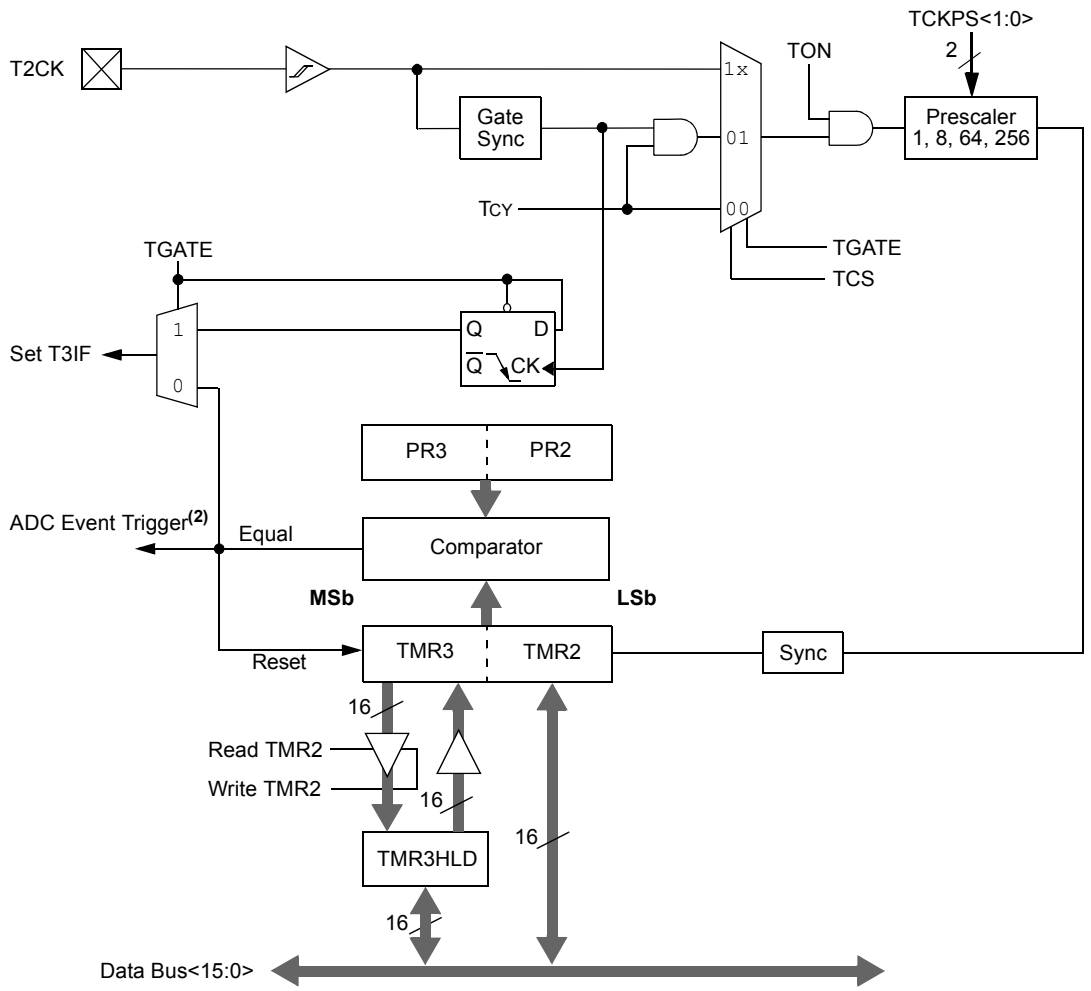

Note 1: The 32-bit timer control bit, T32, must be set for 32-bit timer/counter operation. All control bits are respective to the T2CON register.

2: The ADC event trigger is available only on Timer2/3.

 © 2007 Microchip Technology Inc.

查询"DSPIC33FJ12MC02ESP"供应商

FIGURE 11-2: TIMER2 (16-BIT) BLOCK DIAGRAM

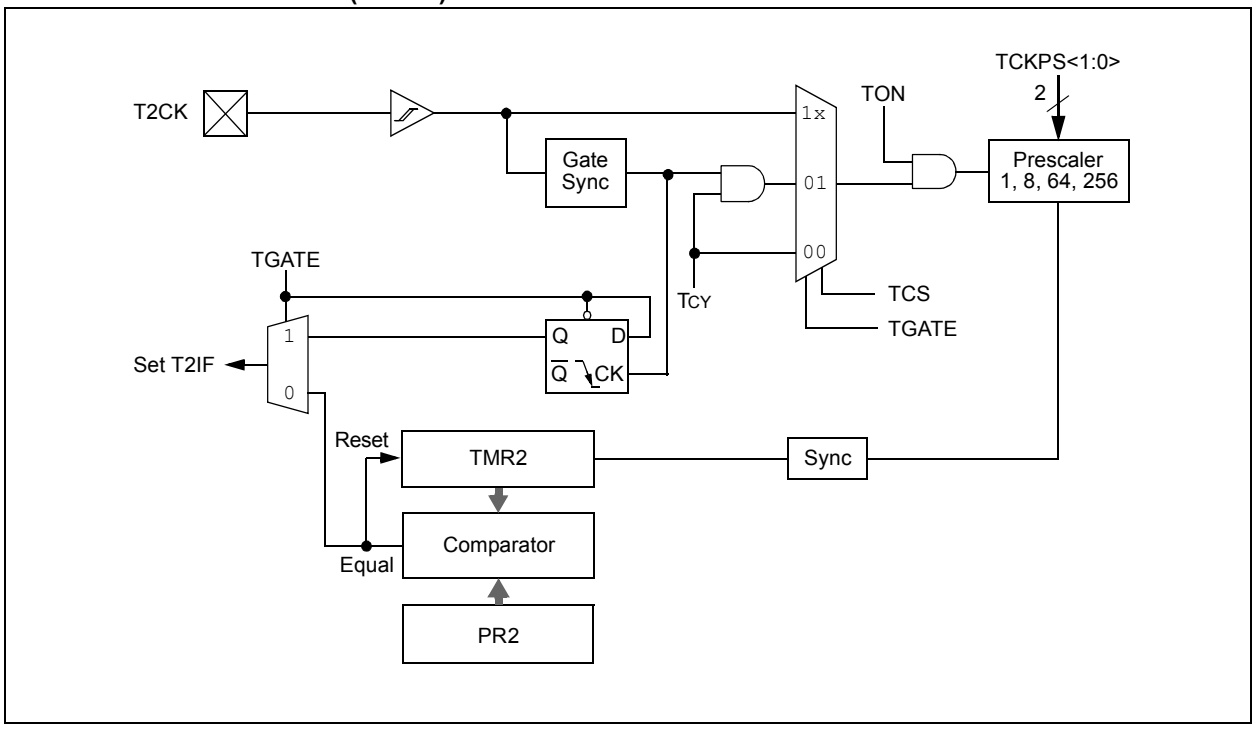

查询"DSPIC33FJ12MC02ESP"供应商

REGISTER 11-1: T2CON CONTROL REGISTER

R/W-0	U-0	R/W-0	U-0	U-0	U-0	U-0	U-0
TON	—	TSIDL	—	—	—	—	—
bit 15							bit 8

U-0	R/W-0	R/W-0	R/W-0	R/W-0	U-0	R/W-0	U-0
—	TGATE	TCKPS<1:0>		T32(1)	—	TCS	—
bit 7							bit 0

Legend:			
R = Readable bit	W = Writable bit	U = Unimplemented bit, read as ‘0’	
-n = Value at POR	‘1’ = Bit is set	‘0’ = Bit is cleared	x = Bit is unknown

bit 15 **TON:** Timer2 On bit
When T32 = 1:
1 = Starts 32-bit Timer2/3
0 = Stops 32-bit Timer2/3
When T32 = 0:
1 = Starts 16-bit Timer2
0 = Stops 16-bit Timer2

bit 14 **Unimplemented:** Read as ‘0’

bit 13 **TSIDL:** Stop in Idle Mode bit
1 = Discontinue module operation when device enters Idle mode
0 = Continue module operation in Idle mode

bit 12-7 **Unimplemented:** Read as ‘0’

bit 6 **TGATE:** Timer2 Gated Time Accumulation Enable bit
When TCS = 1:
This bit is ignored.
When TCS = 0:
1 = Gated time accumulation enabled
0 = Gated time accumulation disabled

bit 5-4 **TCKPS<1:0>:** Timer2 Input Clock Prescale Select bits
11 = 1:256
10 = 1:64
01 = 1:8
00 = 1:1

bit 3 **T32:** 32-bit Timer Mode Select bit(1)
1 = Timer2 and Timer3 form a single 32-bit timer
0 = Timer2 and Timer3 act as two 16-bit timers

bit 2 **Unimplemented:** Read as ‘0’

bit 1 **TCS:** Timer2 Clock Source Select bit
1 = External clock from pin T2CK (on the rising edge)
0 = Internal clock (FCY)

bit 0 **Unimplemented:** Read as ‘0’

Note 1: In 32-bit mode, T3CON control bits do not affect 32-bit timer operation.

 © 2007 Microchip Technology Inc.

查询"DSPIC33FJ12MC02ESP"供应商

REGISTER 11-2: T3CON CONTROL REGISTER

R/W-0	U-0	R/W-0	U-0	U-0	U-0	U-0	U-0
TON(1)	—	TSIDL(1)	—	—	—	—	—
bit 15							bit 8

U-0	R/W-0	R/W-0	R/W-0	U-0	U-0	R/W-0	U-0
—	TGATE(1)	TCKPS<1:0>(1)		—	—	TCS(1)	—
bit 7							bit 0

Legend:			
R = Readable bit	W = Writable bit	U = Unimplemented bit, read as ‘0’	
-n = Value at POR	‘1’ = Bit is set	‘0’ = Bit is cleared	x = Bit is unknown

bit 15 **TON:** Timer3 On bit(1)
1 = Starts 16-bit Timer3
0 = Stops 16-bit Timer3

bit 14 **Unimplemented:** Read as ‘0’

bit 13 **TSIDL:** Stop in Idle Mode bit(1)
1 = Discontinue module operation when device enters Idle mode
0 = Continue module operation in Idle mode

bit 12-7 **Unimplemented:** Read as ‘0’

bit 6 **TGATE:** Timer3 Gated Time Accumulation Enable bit(1)
When TCS = 1:
This bit is ignored.
When TCS = 0:
1 = Gated time accumulation enabled
0 = Gated time accumulation disabled

bit 5-4 **TCKPS<1:0>:** Timer3 Input Clock Prescale Select bits(1)
11 = 1:256
10 = 1:64
01 = 1:8
00 = 1:1

bit 3-2 **Unimplemented:** Read as ‘0’

bit 1 **TCS:** Timer3 Clock Source Select bit(1)
1 = External clock from pin T3CK (on the rising edge)
0 = Internal clock (FCY)

bit 0 **Unimplemented:** Read as ‘0’

Note 1: When 32-bit operation is enabled (T2CON<3> = 1), these bits have no effect on Timer3 operation; all timer functions are set through T2CON.

查询"DSPIC33FJ12MC02ESP"供应商

NOTES:

 © 2007 Microchip Technology Inc.

查询"DSPIC33FJ12MC02ESP"供应商

12.0 INPUT CAPTURE

Note: This data sheet summarizes the features of the dsPIC33FJ12MC201/202 devices. It is not intended to be a comprehensive reference source. To complement the information in this data sheet, refer to the *"dsPIC33F Family Reference Manual"*. Please see the Microchip web site (www.microchip.com) for the latest dsPIC33F Family Reference Manual chapters.

The input capture module is useful in applications requiring frequency (period) and pulse measurement. The dsPIC33FJ12MC201/202 devices support up to eight input capture channels.

The input capture module captures the 16-bit value of the selected Time Base register when an event occurs at the ICx pin. The events that cause a capture event are listed below in three categories:

1. Simple Capture Event modes:
   - Capture timer value on every falling edge of input at ICx pin
   - Capture timer value on every rising edge of input at ICx pin
2. Capture timer value on every edge (rising and falling)
3. Prescaler Capture Event modes:
   - Capture timer value on every 4th rising edge of input at ICx pin
   - Capture timer value on every 16th rising edge of input at ICx pin

Each input capture channel can select one of two 16-bit timers (Timer2 or Timer3) for the time base. The selected timer can use either an internal or external clock.

Other operational features include:

- Device wake-up from capture pin during CPU Sleep and Idle modes
- Interrupt on input capture event
- 4-word FIFO buffer for capture values
  - Interrupt optionally generated after 1, 2, 3 or 4 buffer locations are filled
- Use of input capture to provide additional sources of external interrupts

FIGURE 12-1: INPUT CAPTURE BLOCK DIAGRAM

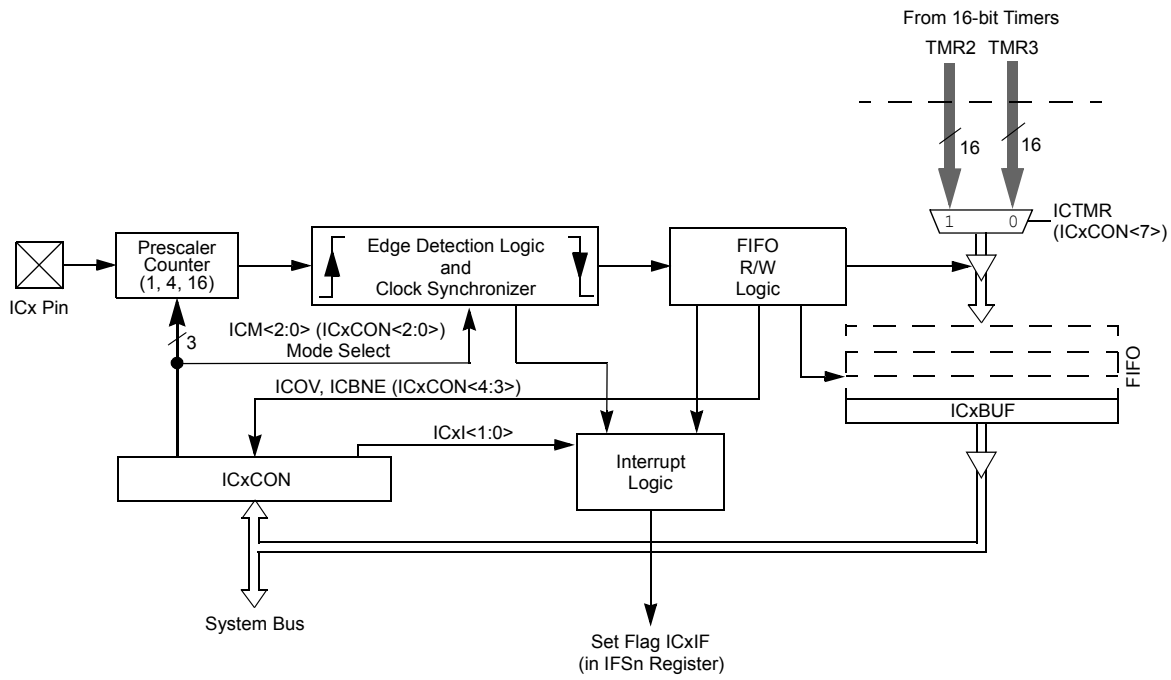

Note: An 'x' in a signal, register or bit name denotes the number of the capture channel.

查询"DSPIC33FJ12MC02ESP"供应商

12.1 Input Capture Registers

REGISTER 12-1: ICxCON: INPUT CAPTURE x CONTROL REGISTER

U-0	U-0	R/W-0	U-0	U-0	U-0	U-0	U-0
—	—	ICSIDL	—	—	—	—	—
bit 15							bit 8

R/W-0	R/W-0	R/W-0	R-0, HC	R-0, HC	R/W-0	R/W-0	R/W-0
ICTMR	ICI<1:0>		ICOV	ICBNE	ICM<2:0>		
bit 7							bit 0

Legend:			
R = Readable bit	W = Writable bit	U = Unimplemented bit, read as ‘0’	
-n = Value at POR	‘1’ = Bit is set	‘0’ = Bit is cleared	x = Bit is unknown

bit 15-14 **Unimplemented:** Read as ‘0’

bit 13 **ICSIDL:** Input Capture Module Stop in Idle Control bit
1 = Input capture module will halt in CPU Idle mode
0 = Input capture module will continue to operate in CPU Idle mode

bit 12-8 **Unimplemented:** Read as ‘0’

bit 7 **ICTMR:** Input Capture Timer Select bits
1 = TMR2 contents are captured on capture event
0 = TMR3 contents are captured on capture event

bit 6-5 **ICI<1:0>:** Select Number of Captures per Interrupt bits
11 = Interrupt on every fourth capture event
10 = Interrupt on every third capture event
01 = Interrupt on every second capture event
00 = Interrupt on every capture event

bit 4 **ICOV:** Input Capture Overflow Status Flag bit (read-only)
1 = Input capture overflow occurred
0 = No input capture overflow occurred

bit 3 **ICBNE:** Input Capture Buffer Empty Status bit (read-only)
1 = Input capture buffer is not empty, at least one more capture value can be read
0 = Input capture buffer is empty

bit 2-0 **ICM<2:0>:** Input Capture Mode Select bits
111 =Input capture functions as interrupt pin only when device is in Sleep or Idle mode
(Rising edge detect only, all other control bits are not applicable.)
110 =Unused (module disabled)
101 =Capture mode, every 16th rising edge
100 =Capture mode, every 4th rising edge
011 =Capture mode, every rising edge
010 =Capture mode, every falling edge
001 =Capture mode, every edge (rising and falling)
(ICI<1:0> bits do not control interrupt generation for this mode.)
000 =Input capture module turned off

 © 2007 Microchip Technology Inc.

查询"DSPIC33FJ12MC02ESP"供应商

13.0 OUTPUT COMPARE

Note: This data sheet summarizes the features of the dsPIC33FJ12MC201/202 devices. It is not intended to be a comprehensive reference source. To complement the information in this data sheet, refer to the *"dsPIC33F Family Reference Manual"*. Please see the Microchip web site (www.microchip.com) for the latest dsPIC33F Family Reference Manual chapters.

13.1 Setup for Single Output Pulse Generation

When the OCM control bits (OCxCON<2:0>) are set to '100', the selected output compare channel initializes the OCx pin to the low state and generates a single output pulse.

To generate a single output pulse, the following steps are required. These steps assume timer source is initially turned off but this is not a requirement for the module operation.

1. Determine the instruction clock cycle time. Take into account the frequency of the external clock to the timer source (if one is used) and the timer prescaler settings.
2. Calculate time to the rising edge of the output pulse relative to the TMRy start value (0000h).
3. Calculate the time to the falling edge of the pulse based on the desired pulse width and the time to the rising edge of the pulse.
4. Write the value computed in step 2 into the Output Compare register, OCxR, and the value computed in step 3 into the Output Compare Secondary register, OCxRS.
5. Set Timer Period register, PRy, to a value equal to or greater than value in OCxRS, the Output Compare Secondary register.
6. Set the OCM bits to '100' and the OCTSEL (OCxCON<3>) bit to the desired timer source. The OCx pin state will now be driven low.
7. Set the TON (TyCON<15>) bit to '1', which enables the compare time base to count. Upon the first match between TMRy and OCxR, the OCx pin will be driven high.

   When the incrementing timer, TMRy, matches the Output Compare Secondary register, OCxRS, the second and trailing edge (high-to-low) of the pulse is driven onto the OCx pin. No additional pulses are driven onto the OCx pin and it remains at low. As a result of the second compare match event, the OCxIF interrupt flag bit is set. This will result in an interrupt if it is enabled by setting the OCxIE bit. For further information on peripheral interrupts, refer to **Section 6.0 "Interrupt Controller"**.
8. To initiate another single pulse output, change the Timer and Compare register settings, if needed, and then issue a write to set the OCM bits to '100'. Disabling and re-enabling the timer, and clearing the TMRy register, are not required, but may be advantageous for defining a pulse from a known event time boundary.

The output compare module does not have to be disabled after the falling edge of the output pulse. Another pulse can be initiated by rewriting the value of the OCxCON register.

13.2 Setup for Continuous Output Pulse Generation

When the OCM control bits (OCxCON<2:0>) are set to '101', the selected output compare channel initializes the OCx pin to the low state and generates output pulses on each and every compare match event.

To configure the module for generation of a continuous stream of output pulses, the following steps are required. These steps assume timer source is initially turned off, but this is not a requirement for the module operation.

1. Determine the instruction clock cycle time. Take into account the frequency of the external clock to the timer source (if one is used) and the timer prescaler settings.
2. Calculate time to the rising edge of the output pulse relative to the TMRy start value (0000h).
3. Calculate the time to the falling edge of the pulse, based on the desired pulse width and the time to the rising edge of the pulse.
4. Write the values computed in step 2 into the Output Compare register, OCxR, and value computed in step 3 into the Output Compare Secondary register, OCxRS.
5. Set Timer Period register, PRy, to a value equal to or greater than value in OCxRS, the Output Compare Secondary register.
6. Set the OCM bits to '101' and the OCTSEL bit to the desired timer source. The OCx pin state will now be driven low.
7. Enable the compare time base by setting the TON (TyCON<15>) bit to '1'. Upon the first match between TMRy and OCxR, the OCx pin will be driven high.

   When the compare time base, TMRy, matches the Output Compare Secondary register, OCxRS, the second and trailing edge (high-to-low) of the pulse is driven onto the OCx pin.

   As a result of the second compare match event, the OCxIF interrupt flag bit is set. When the compare time base and the value in its respective Timer Period register match, the TMRy register resets to 0x0000 and resumes counting.

   These events repeat and a continuous stream of pulses is generated indefinitely. The OCxIF flag is set on each OCxRS-TMRy compare match event.

查询"DSPIC33FJ12MC02ESP"供应商

13.3 Pulse-Width Modulation Mode

Use the following steps when configuring the output compare module for PWM operation:

1. Set the PWM period by writing to the selected Timer Period register (PRy).
2. Set the PWM duty cycle by writing to the OCxRS register.
3. Write the OxCR register with the initial duty cycle.
4. Enable interrupts, if required, for the timer and output compare modules. The output compare interrupt is required for PWM Fault pin utilization.
5. Configure the output compare module for one of two PWM operation modes by writing to the Output Compare Mode bits, OCM<2:0> (OCxCON<2:0>).
6. Set the TMRy prescale value and enable the time base by setting TON = 1 (TxCON<15>).

Note:	The OCxR register should be initialized before the output compare module is first enabled. The OCxR register becomes a read-only duty cycle register when the module is operated in the PWM modes. The value held in OCxR will become the PWM duty cycle for the first PWM period. The contents of the Output Compare Secondary register, OCxRS, will not be transferred into OCxR until a time base period match occurs.

13.3.1 PWM PERIOD

The PWM period is specified by writing to PRy, the Timer Period register. The PWM period can be calculated using Equation 13-1:

EQUATION 13-1: CALCULATING THE PWM PERIOD

PWM Period = [(PRy) + 1] • TCY • (Timer Prescale Value)

where:

PWM Frequency = 1/[PWM Period]

Note:	A PRy value of N will produce a PWM period of N + 1 time base count cycles. For example, a value of 7 written into the PRy register will yield a period consisting of eight time base cycles.

13.3.2 PWM DUTY CYCLE

Specify the PWM duty cycle by writing to the OCxRS register. The OCxRS register can be written to at any time, but the duty cycle value is not latched into OCxR until a match between PRy and TMRy occurs (i.e., the period is complete). This provides a double buffer for the PWM duty cycle and is essential for glitchless PWM operation. In the PWM mode, OCxR is a read-only register.

Some important boundary parameters of the PWM duty cycle include:

- If the Output Compare register, OCxR, is loaded with 0000h, the OCx pin will remain low (0% duty cycle).
- If OCxR is greater than PRy (Timer Period register), the pin will remain high (100% duty cycle).
- If OCxR is equal to PRy, the OCx pin will be low for one time base count value and high for all other count values.

See Example 13-1 for PWM mode timing details. Tables 13-1 through 13-3 show example PWM frequencies and resolutions for a device operating at 4, 16, and 40 MIPS.

EQUATION 13-2: CALCULATION FOR MAXIMUM PWM RESOLUTION

$$\text{Maximum PWM Resolution (bits)} = \frac{\log_{10}\left(\frac{F_{CY}}{F_{PWM}}\right)}{\log_{10}(2)} \text{ bits}$$

EXAMPLE 13-1: PWM PERIOD AND DUTY CYCLE CALCULATIONS

1. Find the Timer Period register value for a desired PWM frequency that is 52.08 kHz, where FCY = 16 MHz and a Timer2 prescaler setting of 1:1.

   TCY = 62.5 ns
   PWM Period = 1/PWM Frequency = 1/52.08 kHz = 19.2 µs
   PWM Period = (PR2 + 1) • TCY • (Timer2 Prescale Value)
   19.2 µs = (PR2 + 1) • 62.5 ns • 1
   PR2 = 306

2. Find the maximum resolution of the duty cycle that can be used with a 52.08 kHz frequency and a 32 MHz device clock rate:

   PWM Resolution = $\log_{10}(F_{CY}/F_{PWM})/\log_{10}2)$ bits
   = $(\log_{10}(16\text{ MHz}/52.08\text{ kHz})/\log_{10}2)$ bits
   = 8.3 bits

 © 2007 Microchip Technology Inc.

查询"DSPIC33FJ12MC02ESP"供应商

TABLE 13-1: EXAMPLE PWM FREQUENCIES AND RESOLUTIONS AT 4 MIPS (FCY = 4 MHz)

PWM Frequency	7.6 Hz	61 Hz	122 Hz	977 Hz	3.9 kHz	31.3 kHz	125 kHz
Timer Prescaler Ratio	8	1	1	1	1	1	1
Period Register Value	FFFFh	FFFFh	7FFFh	0FFFh	03FFh	007Fh	001Fh
Resolution (bits)	16	16	15	12	10	7	5

TABLE 13-2: EXAMPLE PWM FREQUENCIES AND RESOLUTIONS AT 16 MIPS (FCY = 16 MHz)

PWM Frequency	30.5 Hz	244 Hz	488 Hz	3.9 kHz	15.6 kHz	125 kHz	500 kHz
Timer Prescaler Ratio	8	1	1	1	1	1	1
Period Register Value	FFFFh	FFFFh	7FFFh	0FFFh	03FFh	007Fh	001Fh
Resolution (bits)	16	16	15	12	10	7	5

TABLE 13-3: EXAMPLE PWM FREQUENCIES AND RESOLUTIONS AT 40 MIPS (FCY = 40 MHz)

PWM Frequency	76 Hz	610 Hz	1.22 Hz	9.77 kHz	39 kHz	313 kHz	1.25 MHz
Timer Prescaler Ratio	8	1	1	1	1	1	1
Period Register Value	FFFFh	FFFFh	7FFFh	0FFFh	03FFh	007Fh	001Fh
Resolution (bits)	16	16	15	12	10	7	5

FIGURE 13-1: OUTPUT COMPARE MODULE BLOCK DIAGRAM

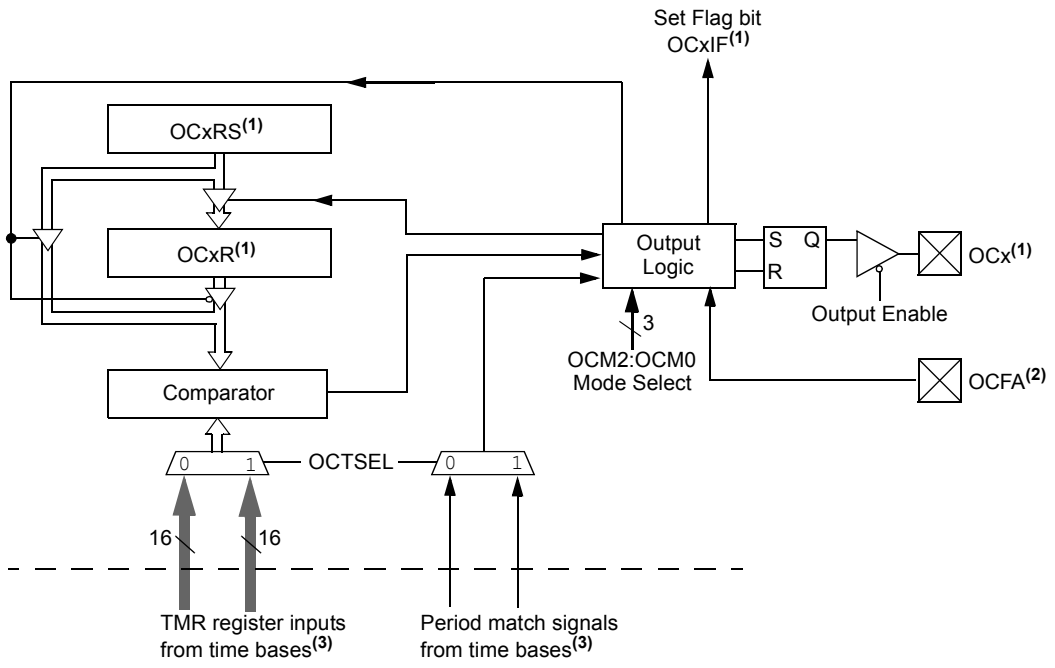

Note 1: Where 'x' is shown, reference is made to the registers associated with the respective output compare channels 1 through 8.

2: OCFA pin controls OC1-OC2 channels.

3: TMR2/TMR3 can be selected via OCTSEL (OCxCON<3>) bit.

查询"DSPIC33FJ12MC02ESP"供应商

REGISTER 13-1: OCxCON: OUTPUT COMPARE x CONTROL REGISTER

U-0	U-0	R/W-0	U-0	U-0	U-0	U-0	U-0
—	—	OCSIDL	—	—	—	—	—
bit 15							bit 8

U-0	U-0	U-0	R-0 HC	R/W-0	R/W-0	R/W-0	R/W-0
—	—	—	OCFLT	OCTSEL	OCM<2:0>		
bit 7							bit 0

Legend:	HC = Cleared in Hardware	HS = Set in Hardware	
R = Readable bit	W = Writable bit	U = Unimplemented bit, read as ‘0’	
-n = Value at POR	‘1’ = Bit is set	‘0’ = Bit is cleared	x = Bit is unknown

bit 15-14 **Unimplemented:** Read as ‘0’

bit 13 **OCSIDL:** Stop Output Compare in Idle Mode Control bit
1 = Output Compare x will halt in CPU Idle mode
0 = Output Compare x will continue to operate in CPU Idle mode

bit 12-5 **Unimplemented:** Read as ‘0’

bit 4 **OCFLT:** PWM Fault Condition Status bit
1 = PWM Fault condition has occurred (cleared in hardware only)
0 = No PWM Fault condition has occurred
(This bit is only used when OCM<2:0> = 111.)

bit 3 **OCTSEL:** Output Compare Timer Select bit
1 = Timer3 is the clock source for Compare x
0 = Timer2 is the clock source for Compare x

bit 2-0 **OCM<2:0>:** Output Compare Mode Select bits
111 = PWM mode on OCx, Fault pin enabled
110 = PWM mode on OCx, Fault pin disabled
101 = Initialize OCx pin low, generate continuous output pulses on OCx pin
100 = Initialize OCx pin low, generate single output pulse on OCx pin
011 = Compare event toggles OCx pin
010 = Initialize OCx pin high, compare event forces OCx pin low
001 = Initialize OCx pin low, compare event forces OCx pin high
000 = Output compare channel is disabled

 © 2007 Microchip Technology Inc.

查询"DSPIC33FJ12MC02ESP"供应商

14.0 MOTOR CONTROL PWM MODULE

Note:	This data sheet summarizes the features of the dsPIC33FJ12MC201/202 devices. It is not intended to be a comprehensive reference source. To complement the information in this data sheet, refer to the *"dsPIC33F Family Reference Manual"*. Please see the Microchip web site (www.microchip.com) for the latest dsPIC33F Family Reference Manual chapters.

The dsPIC33FJ12MC201/202 device supports up to two dedicated Pulse Width Modulation (PWM) modules. The PWM1 module is a 6-channel PWM generator, and the PWM2 module is a 2-channel PWM generator.

The PWM module has the following features:

- Up to 16-bit resolution
- On-the-fly PWM frequency changes
- Edge and Center-Aligned Output modes
- Single Pulse Generation mode
- Interrupt support for asymmetrical updates in Center-Aligned mode
- Output override control for Electrically Commutative Motor (ECM) operation or BLDC
- Special Event comparator for scheduling other peripheral events
- Fault pins to optionally drive each of the PWM output pins to a defined state
- Duty cycle updates configurable to be immediate or synchronized to the PWM time base

14.1 PWM1: 6-Channel PWM Module

This module simplifies the task of generating multiple synchronized PWM outputs. The following power and motion control applications are supported by the PWM module:

- 3-Phase AC Induction Motor
- Switched Reluctance (SR) Motor
- Brushless DC (BLDC) Motor
- Uninterruptible Power Supply (UPS)

This module contains three duty cycle generators, numbered 1 through 3. The module has six PWM output pins, numbered PWM1H1/PWM1L1 through PWM1H3/PWM1L3. The six I/O pins are grouped into high/low numbered pairs, denoted by the suffix H or L, respectively. For complementary loads, the low PWM pins are always the complement of the corresponding high I/O pin.

14.2 PWM2: 2-Channel PWM Module

This module provides an additional pair of complimentary PWM outputs that can be used for:

- Independent PFC correction in a motor system
- Induction cooking

This module contains a duty cycle generator that provides two PWM outputs, numbered PWM2H1/PWM2L1.

查询"DSPIC33FJ12MC02ESP"供应商

FIGURE 14-1: 6-CHANNEL PWM MODULE BLOCK DIAGRAM (PWM1)

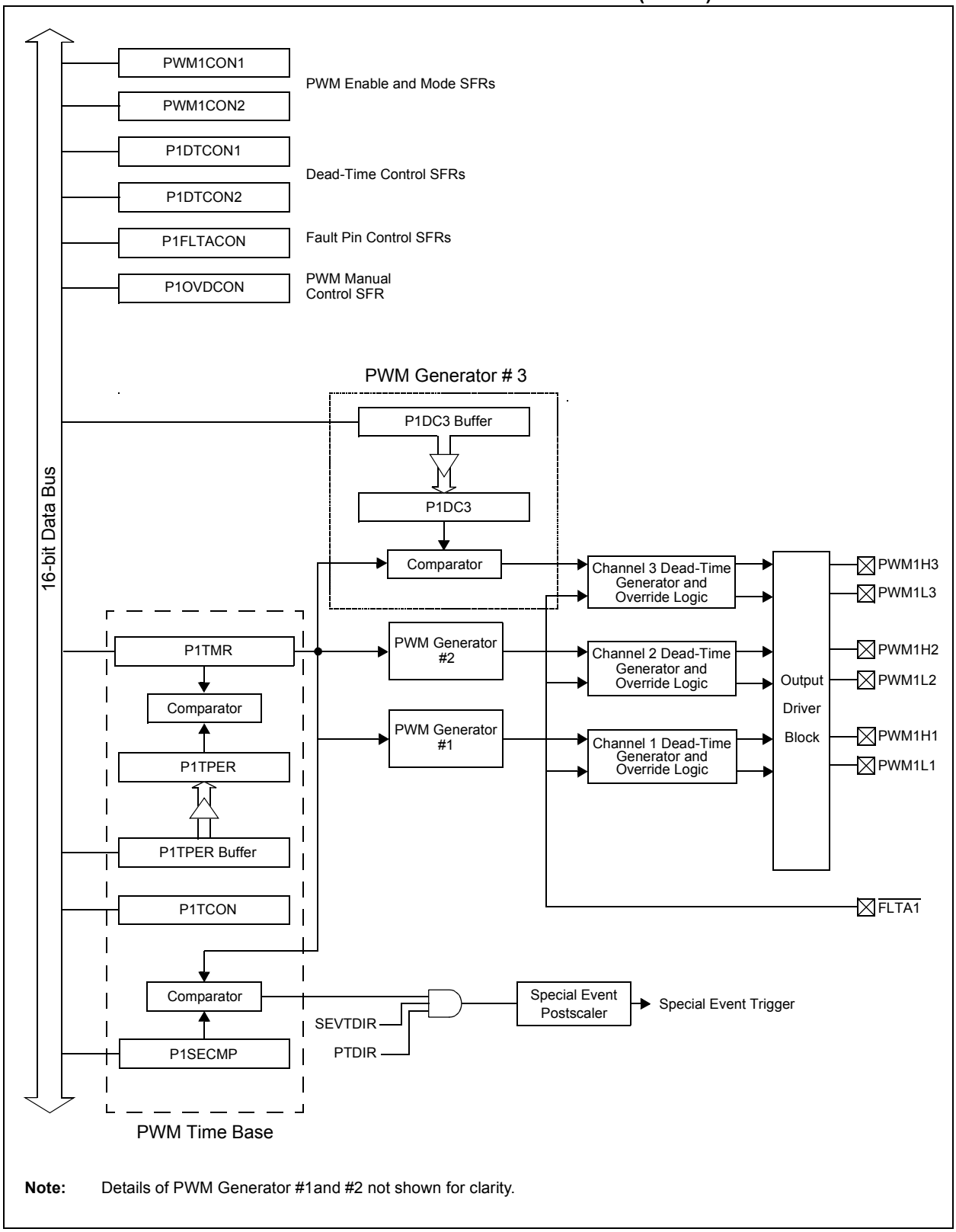

Note: Details of PWM Generator #1and #2 not shown for clarity.

 © 2007 Microchip Technology Inc.

查询"DSPIC33FJ12MC02ESP"供应商

FIGURE 14-2: 2-CHANNEL PWM MODULE BLOCK DIAGRAM (PWM2)

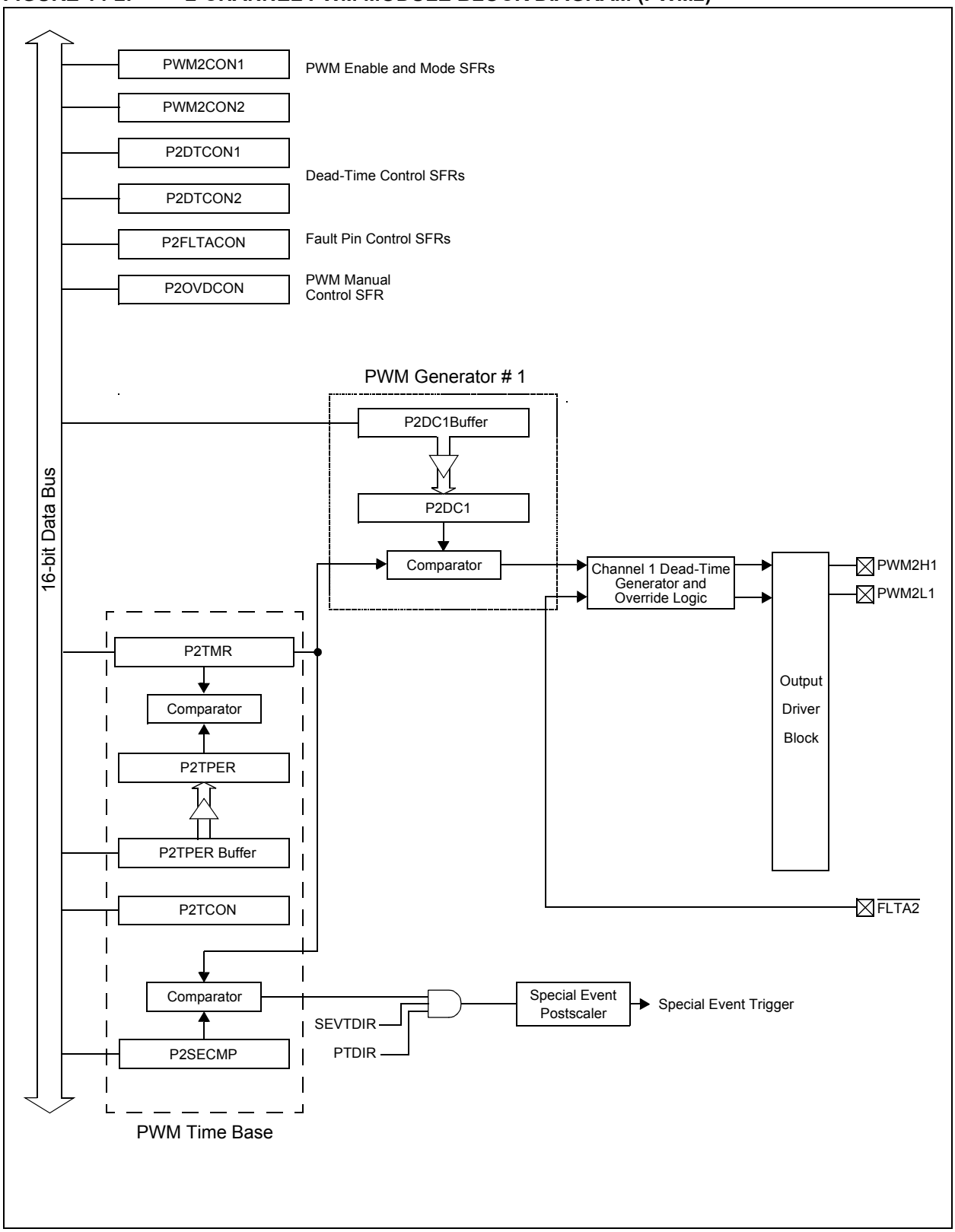

查询"DSPIC33FJ12MC02ESP"供应商

14.3 PWM Time Base

The PWM time base is provided by a 15-bit timer with a prescaler and postscaler. The time base is accessible via the PxTMR SFR. PxTMR<15> is a read-only status bit, PTDIR, that indicates the present count direction of the PWM time base.

- If PTDIR is cleared, PxTMR is counting upward.
- If PTDIR is set, PxTMR is counting downward.

The PWM time base is configured using the PxTCON SFR. The time base is enabled or disabled by setting or clearing the PTEN bit in the PxTCON SFR. PxTMR is not cleared when the PTEN bit is cleared in software.

The PxTPER SFR sets the counting period for PxTMR. The user application must write a 15-bit value to PxTPER<14:0>. When the value in PxTMR<14:0> matches the value in PxTPER<14:0>, the time base will either reset to '0' or reverse the count direction on the next occurring clock cycle. The action taken depends on the operating mode of the time base.

Note:	If the PWM Period register is set to 0x0000, the timer will stop counting and the interrupt and Special Event Trigger will not be generated, even if the special event value is also 0x0000. The module will not update the PWM Period register if it is already at 0x0000; therefore, the user application must disable the module in to update the PWM Period register.

The PWM time base can be configured for four different modes of operation:

- Free-Running mode
- Single-Shot mode
- Continuous Up/Down Count mode
- Continuous Up/Down Count mode with interrupts for double updates

These four modes are selected by the PTMOD<1:0> bits in the PxTCON SFR. The Up/Down Count modes support center-aligned PWM generation. The Single-Shot mode allows the PWM module to support pulse control of certain Electronically Commutative Motors (ECMs).

The interrupt signals generated by the PWM time base depend on the mode selection bits (PTMOD<1:0>) and the postscaler bits (PTOPS<3:0>) in the PxTCON SFR.

14.3.1 FREE-RUNNING MODE

In Free-Running mode, the PWM time base counts upwards until the value in the PWM Time Base Period register (PxTPER) is matched. The PxTMR register is reset on the following input clock edge, and the time base will continue to count upward as long as the PTEN bit remains set.

When the PWM time base is in the Free-Running mode (PTMOD<1:0> = 00), an interrupt event is generated each time a match with the PxTPER register occurs and the PxTMR register is reset to zero. The postscaler selection bits can be used in this mode of the timer to reduce the frequency of interrupt events.

14.3.2 SINGLE-SHOT MODE

In Single-Shot mode, the PWM time base begins counting upward when the PTEN bit is set. When the value in the PxTMR register matches the PxTPER register, the PxTMR register will be reset on the following input clock edge, and the PTEN bit will be cleared by the hardware to halt the time base.

When the PWM time base is in Single-Shot mode (PTMOD<1:0> = 01), an interrupt event is generated when a match with the PxTPER register occurs. The PxTMR register is reset to zero on the following input clock edge and the PTEN bit is cleared. The postscaler selection bits have no effect in this mode of the timer.

14.3.3 CONTINUOUS UP/DOWN COUNT MODES

In Continuous Up/Down Count modes, the PWM time base counts upward until the value in the PxTPER register is matched. The timer will begin counting downwards on the following input clock edge. The PTDIR bit in the PxTMR SFR is read-only and indicates the counting direction. The PTDIR bit is set when the timer counts downward.

In the Up/Down Count mode (PTMOD<1:0> = 10), an interrupt event is generated each time the value of the PxTMR register becomes zero and the PWM time base begins to count upward. The postscaler selection bits can be used in this mode of the timer to reduce the frequency of interrupt events.

 © 2007 Microchip Technology Inc.

查询"DSPIC33FJ12MC02ESP"供应商

14.3.4 DOUBLE UPDATE MODE

In Double Update mode (PTMOD<1:0> = 11), an interrupt event is generated each time the PxTMR register is equal to zero, as well as each time a period match occurs. The postscaler selection bits have no effect in this mode of the timer.

Double Update mode provides two additional functions:

- The control loop bandwidth is doubled because the PWM duty cycles can be updated twice per period.
- Asymmetrical center-aligned PWM waveforms can be generated, which can be useful for minimizing output waveform distortion in certain motor control applications.

Note:	Programming a value of 0x0001 in the PWM Period register could generate a continuous interrupt pulse and must be avoided.

14.3.5 PWM TIME BASE PRESCALER

The input clock to PxTMR (FOSC/4) has prescaler options of 1:1, 1:4, 1:16 or 1:64, selected by control bits PTCKPS<1:0> in the PxTCON SFR. The prescaler counter is cleared when any of the following occur:

- A write to the PxTMR register
- A write to the PxTCON register
- Any device Reset

The PxTMR register is not cleared when PxTCON is written.

14.3.6 PWM TIME BASE POSTSCALER

The match output of PxTMR can optionally be postscaled through a 4-bit postscaler (which gives a 1:1 to 1:16 scaling).

The postscaler counter is cleared when any of the following occur:

- A write to the PxTMR register
- A write to the PxTCON register
- Any device Reset

The PxTMR register is not cleared when PxTCON is written.

14.4 PWM Period

PxTPER is a 15-bit register used to set the counting period for the PWM time base. PxTPER is a double-buffered register. The PxTPER buffer contents are loaded into the PxTPER register at the following instants:

- Free-Running and Single-Shot modes: When the PxTMR register is reset to zero after a match with the PxTPER register.
- Up/Down Count modes: When the PxTMR register is zero.

The value held in the PxTPER buffer is automatically loaded into the PxTPER register when the PWM time base is disabled (PTEN = 0).

The PWM period can be determined using Equation 14-1:

EQUATION 14-1: PWM PERIOD

$$T_{PWM} = T_{CY} \cdot (PxTPER + 1) \cdot (PxTMR\ Prescale\ Value)$$

If the PWM time base is configured for one of the Up/Down Count modes, the PWM period will be twice the value provided by Equation 14-1.

The maximum resolution (in bits) for a given device oscillator and PWM frequency can be determined using Equation 14-2:

EQUATION 14-2: PWM RESOLUTION

$$Resolution = \frac{\log(2 \cdot T_{PWM}/T_{CY})}{\log(2)}$$

14.5 Edge-Aligned PWM

Edge-aligned PWM signals are produced by the module when the PWM time base is in Free-Running or Single-Shot mode. For edge-aligned PWM outputs, the output has a period specified by the value in PxTPER and a duty cycle specified by the appropriate Duty Cycle register (see Figure 14-3). The PWM output is driven active at the beginning of the period (PxTMR = 0) and is driven inactive when the value in the Duty Cycle register matches PxTMR.

If the value in a particular Duty Cycle register is zero, the output on the corresponding PWM pin is inactive for the entire PWM period. In addition, the output on the PWM pin is active for the entire PWM period if the value in the Duty Cycle register is greater than the value held in the PxTPER register.

查询"DSPIC33FJ12MC02ESP"供应商

FIGURE 14-3: EDGE-ALIGNED PWM

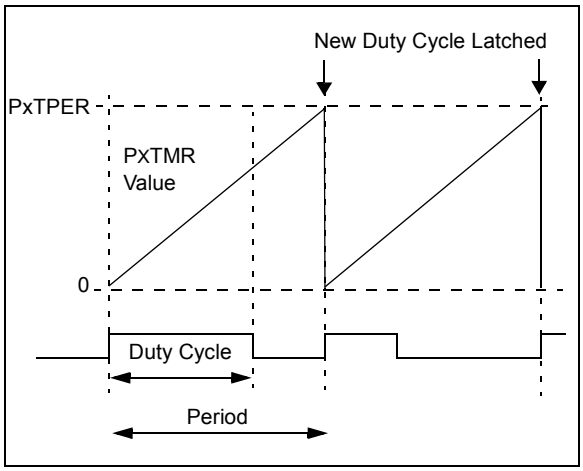

14.6 Center-Aligned PWM

Center-aligned PWM signals are produced by the module when the PWM time base is configured in an Up/Down Count mode (see Figure 14-4).

The PWM compare output is driven to the active state when the value of the Duty Cycle register matches the value of PxTMR and the PWM time base is counting downward (PTDIR = 1). The PWM compare output is driven to the inactive state when the PWM time base is counting upward (PTDIR = 0) and the value in the PxTMR register matches the duty cycle value.

If the value in a particular Duty Cycle register is zero, the output on the corresponding PWM pin is inactive for the entire PWM period. In addition, the output on the PWM pin is active for the entire PWM period if the value in the Duty Cycle register is equal to the value held in the PxTPER register.

FIGURE 14-4: CENTER-ALIGNED PWM

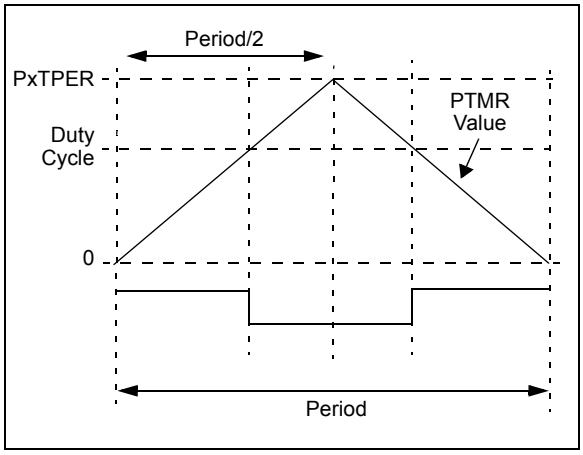

14.7 PWM Duty Cycle Comparison Units

Three 16-bit Special Function Registers (PxDC1, PxDC2, PxDC3) are used to specify duty cycle values for the PWM module.

The value in each Duty Cycle register determines the amount of time that the PWM output is active. The Duty Cycle registers are 16 bits wide. The Least Significant bit (LSb) of a Duty Cycle register determines whether the PWM edge occurs in the beginning. Thus the PWM resolution is effectively doubled.

14.7.1 DUTY CYCLE REGISTER BUFFERS

The three PWM Duty Cycle registers are double-buffered to allow glitchless updates of the PWM outputs. For each duty cycle, there is a Duty Cycle register that is accessible by the user application and a second Duty Cycle register that holds the actual compare value used in the present PWM period.

For edge-aligned PWM output, a new duty cycle value will be updated whenever a match with the PxTPER register occurs and PxTMR is reset. The contents of the duty cycle buffers are automatically loaded into the Duty Cycle registers when the PWM time base is disabled (PTEN = 0) and the UDIS bit is cleared in PWMxCON2.

When the PWM time base is in the Up/Down Count mode, new duty cycle values are updated when the value of the PxTMR register is zero, and the PWM time base begins to count upward. The contents of the duty cycle buffers are automatically loaded into the Duty Cycle registers when the PWM time base is disabled (PTEN = 0).

When the PWM time base is in the Up/Down Count mode with double updates, new duty cycle values are updated when the value of the PxTMR register is zero, and when the value of the PxTMR register matches the value in the PxTPER register. The contents of the duty cycle buffers are automatically loaded into the Duty Cycle registers when the PWM time base is disabled (PTEN = 0).

 © 2007 Microchip Technology Inc.

查询"DSPIC33FJ12MC02ESP"供应商

14.7.2 DUTY CYCLE IMMEDIATE UPDATES

When the Immediate Update Enable bit is set (IUE = 1), any write to the Duty Cycle registers updates the new duty cycle value immediately. This feature gives programmers the option to allow immediate updates of the active PWM Duty Cycle registers instead of waiting for the end of the current time base period. Duty cycle update effects are as follows:

- If the PWM output is active at the time the new duty cycle is written and the new duty cycle is less than the current time base value, the PWM pulse width will be shortened.
- If the PWM output is active at the time the new duty cycle is written and the new duty cycle is greater than the current time base value, the PWM pulse width will be lengthened.
- If the PWM output is inactive at the time the new duty cycle is written and the new duty cycle is greater than the current time base value, the PWM output will become active immediately and will remain active for the new written duty cycle value.

System stability is improved in closed-loop servo applications by reducing the delay between system observation and the issuance of system corrective commands when immediate updates are enabled (IUE = 1).

14.8 Complementary PWM Operation

In the Complementary mode of operation, each pair of PWM outputs is obtained by a complementary PWM signal. A dead time can be inserted during device switching, when both outputs are inactive for a short period (refer to **Section 14.9 "Dead-Time Generators"**).

In Complementary mode, the duty cycle comparison units are assigned to the PWM outputs as follows:

- PxDC1 register controls PWM1H/PWM1L outputs
- PxDC2 register controls PWM2H/PWM2L outputs
- PxDC3 register controls PWM3H/PWM3L outputs

Complementary mode is selected for each PWM I/O pin pair by clearing the appropriate PMODx bit in the PWMxCON1 SFR. The PWM I/O pins are set to Complementary mode by default upon a device Reset.

14.9 Dead-Time Generators

Dead-time generation can be provided when any of the PWM I/O pin pairs are operating in Complementary Output mode. The PWM outputs use push-pull drive circuits. Power output devices cannot switch instantaneously, so some amount of time must be provided between the turn-off event of one PWM output in a complementary pair and the turn-on event of the other transistor.

The PWM module allows two different dead times to be programmed. These two dead times can be used in one of two methods to increase user flexibility:

- The PWM output signals can be optimized for different turn-off times in the high side and low side transistors in a complementary pair of transistors. The first dead time is inserted between the turn-off event of the lower transistor of the complementary pair and the turn-on event of the upper transistor. The second dead time is inserted between the turn-off event of the upper transistor and the turn-on event of the lower transistor.
- The two dead times can be assigned to individual PWM I/O pin pairs. This operating mode allows the PWM module to drive different transistor/load combinations with each complementary PWM I/O pin pair.

14.9.1 DEAD-TIME GENERATORS

Each complementary output pair for the PWM module has a 6-bit down counter that is used to produce the dead-time insertion. As shown in Figure 14-5, each dead-time unit has a rising and falling edge detector connected to the duty cycle comparison output.

查询"DSPIC33FJ12MC02ESP"供应商

FIGURE 14-5: DEAD-TIME TIMING DIAGRAM

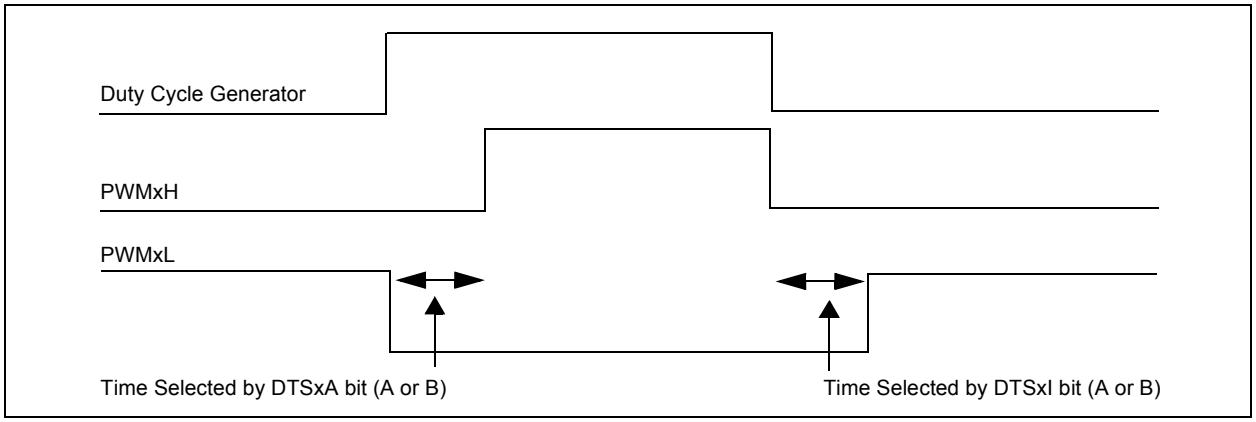

14.9.2 DEAD-TIME ASSIGNMENT

The PxDTCON2 SFR contains control bits that allow the dead times to be assigned to each of the complementary outputs. Table 14-1 summarizes the function of each dead-time selection control bit.

TABLE 14-1: DEAD-TIME SELECTION BITS

Bit	Function
DTS1A	Selects PWMxL1/PWMxH1 active edge dead time.
DTS1I	Selects PWMxL1/PWMxH1 inactive edge dead time.
DTS2A	Selects PWMxL2/PWMxH2 active edge dead time.
DTS2I	Selects PWMxL2/PWMxH2 inactive edge dead time.
DTS3A	Selects PWMxL3/PWMxH3 active edge dead time.
DTS3I	Selects PWMxL3/PWMxH3 inactive edge dead time.

14.9.3 DEAD-TIME RANGES

The amount of dead time provided by each dead-time unit is selected by specifying the input clock prescaler value and a 6-bit unsigned value. The amount of dead time provided by each unit can be set independently.

Four input clock prescaler selections have been provided to allow a suitable range of dead times, based on the device operating frequency. The clock prescaler option can be selected independently for each of the two dead-time values. The dead-time clock prescaler values are selected using the DTAPS<1:0> and DTBPS<1:0> control bits in the PxDTCON1 SFR. One of four clock prescaler options (TCY, 2 TCY, 4 TCY or 8 TCY) can be selected for each of the dead-time values.

After the prescaler values are selected, the dead time for each unit is adjusted by loading two 6-bit unsigned values into the PxDTCON1 SFR.

The dead-time unit prescalers are cleared on the following events:

- On a load of the down timer due to a duty cycle comparison edge event.
- On a write to the PxDTCON1 or PxDTCON2 registers.
- On any device Reset.

Note:	The user application should not modify the PxDTCON1 or PxDTCON2 values while the PWM module is operating (PTEN = 1). Unexpected results can occur.

 © 2007 Microchip Technology Inc.

查询"DSPIC33FJ12MC02ESP"供应商

14.10 Independent PWM Output

Independent PWM Output mode is required for driving certain types of loads. A particular PWM output pair is in the Independent Output mode when the corresponding PMODx bit in the PWMxCON1 register is set. No dead-time control is implemented between adjacent PWM I/O pins when the module is operating in the Independent PWM Output mode and both I/O pins are allowed to be active simultaneously.

In the Independent PWM Output mode, each duty cycle generator is connected to both of the PWM I/O pins in an output pair. By using the associated Duty Cycle register and the appropriate bits in the PxOVDCON register, the programmer can select the following signal output options for each PWM I/O pin operating in this mode:

- I/O pin outputs PWM signal
- I/O pin inactive
- I/O pin active

14.11 Single Pulse PWM Operation

The PWM module produces single pulse outputs when the PxTCON control bits PTMOD<1:0> = `10`. Only edge-aligned outputs can be produced in the Single Pulse mode. In Single Pulse mode, the PWM I/O pin(s) are driven to the active state when the PTEN bit is set. When a match with a Duty Cycle register occurs, the PWM I/O pin is driven to the inactive state. When a match with the PxTPER register occurs, the PxTMR register is cleared, all active PWM I/O pins are driven to the inactive state, the PTEN bit is cleared and an interrupt is generated.

14.12 PWM Output Override

The PWM output override bits allow the user application to manually drive the PWM I/O pins to specified logic states, independent of the duty cycle comparison units.

All control bits associated with the PWM output override function are contained in the PxOVDCON register. The upper half of the PxOVDCON register contains eight bits, POVDxH<4:1> and POVDxL<4:1>, that determine which PWM I/O pins will be overridden. The lower half of the PxOVDCON register contains eight bits, POUTxH<4:1> and POUTxL<4:1>, that determine the state of the PWM I/O pins when a particular output is overridden via the POVD bits.

14.12.1 COMPLEMENTARY OUTPUT MODE

When a PWMxL pin is driven active via the PxOVDCON register, the output signal is forced to be the complement of the corresponding PWMxH pin in the pair. Dead-time insertion is still performed when PWM channels are overridden manually.

14.12.2 OVERRIDE SYNCHRONIZATION

If the OSYNC bit in the PWMxCON2 register is set, all output overrides performed via the PxOVDCON register are synchronized to the PWM time base. Synchronous output overrides occur at the following times:

- Edge-Aligned mode – When PxTMR is zero
- Center-Aligned modes – When PxTMR is zero and the value of PxTMR matches PxTPER

14.13 PWM Output and Polarity Control

Three device Configuration bits are associated with the PWM module that provide PWM output pin control:

- HPOL Configuration bit
- LPOL Configuration bit
- PWMPIN Configuration bit

These three bits in the FPOR Configuration register (see **Section 20.0 "Special Features"**) work in conjunction with the eight PWM Enable bits (PENxH<4:1>, PENxL<4:1>) located in the PWMxCON1 SFR. The Configuration bits and PWM Enable bits ensure that the PWM pins are in the correct states after a device Reset occurs.

The PWMPIN configuration fuse allows the PWM module outputs to be optionally enabled on a device Reset. If PWMPIN = `0`, the PWM outputs are driven to their inactive states at Reset. If PWMPIN = `1` (default), the PWM outputs will be tri-stated. The HPOL bit specifies the polarity for the PWMxH outputs. The LPOL bit specifies the polarity for the PWMxL outputs.

14.13.1 OUTPUT PIN CONTROL

The PENxH<4:1> and PENxL<4:1> control bits in the PWMxCON1 SFR enable each high PWM output pin and each low PWM output pin, respectively. If a particular PWM output pin is not enabled, it is treated as a general purpose I/O pin.

14.14 PWM Fault Pins

There is one Fault pin ($\overline{\text{FLTAx}}$) associated with the PWM module. When asserted, this pin can optionally drive each of the PWM I/O pins to a defined state.

查询"DSPIC33FJ12MC02ESP"供应商

14.14.1 FAULT PIN ENABLE BITS

The PxFLTACON SFR have four control bits that determine whether a particular pair of PWM I/O pins is to be controlled by the Fault input pin. To enable a specific PWM I/O pin pair for Fault overrides, the corresponding bit should be set in the PxFLTACON register.

If all enable bits are cleared in the PxFLTACON register, the corresponding Fault input pin has no effect on the PWM module and the pin can be used as a general purpose interrupt or I/O pin.

Note:	The Fault pin logic can operate independent of the PWM logic. If all the enable bits in the PxFLTACON registers are cleared, then the Fault pin(s) could be used as general purpose interrupt pin(s). Each Fault pin has an interrupt vector, interrupt flag bit and interrupt priority bits associated with it.

14.14.2 FAULT STATES

The PxFLTACON Special Function Registers have eight bits each that determine the state of each PWM I/O pin when it is overridden by a Fault input. When these bits are cleared, the PWM I/O pin is driven to the inactive state. If the bit is set, the PWM I/O pin is driven to the active state. The active and inactive states are referenced to the polarity defined for each PWM I/O pin (HPOL and LPOL polarity control bits).

A special case exists when a PWM module I/O pair is in the Complementary mode and both pins are programmed to be active on a Fault condition. The PWMxH pin always has priority in the Complementary mode, so that both I/O pins cannot be driven active simultaneously.

14.14.3 FAULT PIN PRIORITY

If both Fault input pins have been assigned to control a particular PWM I/O pin, the Fault state programmed for the Fault A input pin takes priority over the Fault B input pin.

14.14.4 FAULT INPUT MODES

Each of the Fault input pins has two modes of operation:

- **Latched Mode:** When the Fault pin is driven low, the PWM outputs go to the states defined in the PxFLTACON registers. The PWM outputs remain in this state until the Fault pin is driven high and the corresponding interrupt flag has been cleared in software. When both of these actions have occurred, the PWM outputs return to normal operation at the beginning of the next PWM cycle or half-cycle boundary. If the interrupt flag is cleared before the Fault condition ends, the PWM module waits until the Fault pin is no longer asserted to restore the outputs.
- **Cycle-by-Cycle Mode:** When the Fault input pin is driven low, the PWM outputs remain in the defined Fault states for as long as the Fault pin is held low. After the Fault pin is driven high, the PWM outputs return to normal operation at the beginning of the following PWM cycle or half-cycle boundary.

The operating mode for each Fault input pin is selected using the FLTAM control bits in the PxFLTACON Special Function Registers.

Each of the Fault pins can be controlled manually in software.

14.15 PWM Update Lockout

For a complex PWM application, the user application may need to write up to three Duty Cycle registers and the PWM Time Base Period register, PxTPER, at a given time. In some applications, it is important that all buffer registers be written before the new duty cycle and period values are loaded for use by the module.

The PWM update lockout feature is enabled by setting the UDIS control bit in the PWM1CON2 SFR. The UDIS bit affects all Duty Cycle Buffer registers and the PWM Time Base Period register, PxTPER. No duty cycle changes or period value changes will have effect while UDIS = `1`.

If the IUE bit is set, any change to the Duty Cycle registers will be immediately updated regardless of the UDIS bit state. The PWM Period register (PxTPER) updates are not affected by the IUE control bit.

 © 2007 Microchip Technology Inc.

查询"DSPIC33FJ12MC02ESP"供应商

14.16 PWM Special Event Trigger

The PWM module has a Special Event Trigger that allows ADC conversions to be synchronized to the PWM time base. The ADC sampling and conversion time can be programmed to occur at any point within the PWM period. The Special Event Trigger allows the programmer to minimize the delay between the time when ADC conversion results are acquired and the time when the duty cycle value is updated.

The PWM Special Event Trigger has an SFR named PxSECMP, and five control bits to control its operation. The PxTMR value for which a Special Event Trigger should occur is loaded into the PxSECMP register.

When the PWM time base is in Up/Down Count mode, an additional control bit is required to specify the counting phase for the Special Event Trigger. The count phase is selected using the SEVTDIR control bit in the PxSECMP SFR:

- If the SEVTDIR bit is cleared, the Special Event Trigger occurs on the upward counting cycle of the PWM time base.
- If the SEVTDIR bit is set, the Special Event Trigger occurs on the downward count cycle of the PWM time base.

The SEVTDIR control bit has no effect unless the PWM time base is configured for an Up/Down Count mode.

14.16.1 SPECIAL EVENT TRIGGER POSTSCALER

The PWM Special Event Trigger has a postscaler that allows a 1:1 to 1:16 postscale ratio. The postscaler is configured by writing the SEVOPS<3:0> control bits in the PWMxCON2 SFR.

The special event output postscaler is cleared on the following events:

- Any write to the PxSECMP register
- Any device Reset

14.17 PWM Operation During CPU Sleep Mode

The Fault A and Fault B input pins can wake the CPU from Sleep mode. The PWM module generates an interrupt if either of the Fault pins is driven low while in Sleep mode.

14.18 PWM Operation During CPU Idle Mode

The PxTCON SFR contains a PTSIDL control bit. This bit determines if the PWM module will continue to operate or stop when the device enters Idle mode. If PTSIDL = `0`, the module will continue to operate. If PTSIDL = `1`, the module will stop operation as long as the CPU remains in Idle mode.

查询"DSPIC33FJ12MC02ESP"供应商

REGISTER 14-1: PxTCON: PWM TIME BASE CONTROL REGISTER

R/W-0	U-0	R/W-0	U-0	U-0	U-0	U-0	U-0
PTEN	—	PTSIDL	—	—	—	—	—
bit 15							bit 8

R/W-0	R/W-0	R/W-0	R/W-0	R/W-0	R/W-0	R/W-0	R/W-0
PTOPS<3:0>				PTCKPS<1:0>		PTMOD<1:0>	
bit 7							bit 0

Legend:			
R = Readable bit	W = Writable bit	U = Unimplemented bit, read as ‘0’	
-n = Value at POR	‘1’ = Bit is set	‘0’ = Bit is cleared	x = Bit is unknown

bit 15 **PTEN:** PWM Time Base Timer Enable bit
1 = PWM time base is on
0 = PWM time base is off

bit 14 **Unimplemented:** Read as ‘0’

bit 13 **PTSIDL:** PWM Time Base Stop in Idle Mode bit
1 = PWM time base halts in CPU Idle mode
0 = PWM time base runs in CPU Idle mode

bit 12-8 **Unimplemented:** Read as ‘0’

bit 7-4 **PTOPS<3:0>:** PWM Time Base Output Postscale Select bits
1111 = 1:16 postscale
•
•
•
0001 = 1:2 postscale
0000 = 1:1 postscale

bit 3-2 **PTCKPS<1:0>:** PWM Time Base Input Clock Prescale Select bits
11 = PWM time base input clock period is 64 TCY (1:64 prescale)
10 = PWM time base input clock period is 16 TCY (1:16 prescale)
01 = PWM time base input clock period is 4 TCY (1:4 prescale)
00 = PWM time base input clock period is TCY (1:1 prescale)

bit 1-0 **PTMOD<1:0>:** PWM Time Base Mode Select bits
11 = PWM time base operates in a Continuous Up/Down Count mode with interrupts for double PWM updates
10 = PWM time base operates in a Continuous Up/Down Count mode
01 = PWM time base operates in Single Pulse mode
00 = PWM time base operates in a Free-Running mode

 © 2007 Microchip Technology Inc.

查询"DSPIC33FJ12MC02ESP"供应商

REGISTER 14-2: PxTMR: PWM TIMER COUNT VALUE REGISTER

R-0	R/W-0	R/W-0	R/W-0	R/W-0	R/W-0	R/W-0	R/W-0
PTDIR	PTMR<14:8>						
bit 15							bit 8

R/W-0	R/W-0	R/W-0	R/W-0	R/W-0	R/W-0	R/W-0	R/W-0
PTMR<7:0>							
bit 7							bit 0

Legend:			
R = Readable bit	W = Writable bit	U = Unimplemented bit, read as ‘0’	
-n = Value at POR	‘1’ = Bit is set	‘0’ = Bit is cleared	x = Bit is unknown

bit 15 **PTDIR:** PWM Time Base Count Direction Status bit (read-only)
1 = PWM time base is counting down
0 = PWM time base is counting up

bit 14-0 **PTMR <14:0>:** PWM Time Base Register Count Value bits

REGISTER 14-3: PxTPER: PWM TIME BASE PERIOD REGISTER

U-0	R/W-0	R/W-0	R/W-0	R/W-0	R/W-0	R/W-0	R/W-0
—	PTPER<14:8>						
bit 15							bit 8

R/W-0	R/W-0	R/W-0	R/W-0	R/W-0	R/W-0	R/W-0	R/W-0
PTPER<7:0>							
bit 7							bit 0

Legend:			
R = Readable bit	W = Writable bit	U = Unimplemented bit, read as ‘0’	
-n = Value at POR	‘1’ = Bit is set	‘0’ = Bit is cleared	x = Bit is unknown

bit 15 **Unimplemented:** Read as ‘0’

bit 14-0 **PTPER<14:0>:** PWM Time Base Period Value bits

查询"DSPIC33FJ12MC02ESP"供应商

REGISTER 14-4: PxSECMP: SPECIAL EVENT COMPARE REGISTER

R/W-0	R/W-0	R/W-0	R/W-0	R/W-0	R/W-0	R/W-0	R/W-0
SEVTDIR(1)	SEVTCMP<14:8>(2)						
bit 15							bit 8

R/W-0	R/W-0	R/W-0	R/W-0	R/W-0	R/W-0	R/W-0	R/W-0
SEVTCMP<7:0>(2)							
bit 7							bit 0

Legend:			
R = Readable bit	W = Writable bit	U = Unimplemented bit, read as ‘0’	
-n = Value at POR	‘1’ = Bit is set	‘0’ = Bit is cleared	x = Bit is unknown

bit 15 **SEVTDIR:** Special Event Trigger Time Base Direction bit(1)
1 = A Special Event Trigger will occur when the PWM time base is counting downward
0 = A Special Event Trigger will occur when the PWM time base is counting upward

bit 14-0 **SEVTCMP<14:0>:** Special Event Compare Value bits(2)

Note 1: SEVTDIR is compared with PTDIR (PxTMR<15>) to generate the Special Event Trigger.
2: PxSECMP<14:0> is compared with PxTMR<14:0> to generate the Special Event Trigger.

 © 2007 Microchip Technology Inc.

查询"DSPIC33FJ12MC02ESP"供应商

REGISTER 14-5: PWMxCON1: PWM CONTROL REGISTER 1(2)

U-0	U-0	U-0	U-0	U-0	R/W-0	R/W-0	R/W-0
—	—	—	—	—	PMOD3	PMOD2	PMOD1
bit 15							bit 8

U-0	R/W-1	R/W-1	R/W-1	U-0	R/W-1	R/W-1	R/W-1
—	PEN3H(1)	PEN2H(1)	PEN1H(1)	—	PEN3L(1)	PEN2L(1)	PEN1L(1)
bit 7							bit 0

Legend:			
R = Readable bit	W = Writable bit	U = Unimplemented bit, read as ‘0’	
-n = Value at POR	‘1’ = Bit is set	‘0’ = Bit is cleared	x = Bit is unknown

bit 15-11 **Unimplemented:** Read as ‘0’

bit 10-8 **PMOD4:PMOD1:** PWM I/O Pair Mode bits
1 = PWM I/O pin pair is in the Independent PWM Output mode
0 = PWM I/O pin pair is in the Complementary Output mode

bit 7 **Unimplemented:** Read as ‘0’

bit 6-4 **PEN3H:PEN1H:** PWMxH I/O Enable bits(1)
1 = PWMxH pin is enabled for PWM output
0 = PWMxH pin disabled, I/O pin becomes general purpose I/O

bit 3 **Unimplemented:** Read as ‘0’

bit 2-0 **PEN3L:PEN1L:** PWMxL I/O Enable bits(1)
1 = PWMxL pin is enabled for PWM output
0 = PWMxL pin disabled, I/O pin becomes general purpose I/O

Note 1: Reset condition of the PENxH and PENxL bits depends on the value of the PWMPIN Configuration bit in the FPOR Configuration register.

2: PWM2 supports only 1 PWM I/O pin pair. PWM1 on dsPIC33FJ12MC201 devices supports only two PWM I/O pin pairs.

查询"DSPIC33FJ12MC02ESP"供应商

REGISTER 14-6: PWMxCON2: PWM CONTROL REGISTER 2

U-0	U-0	U-0	U-0	R/W-0	R/W-0	R/W-0	R/W-0
—	—	—	—	SEVOPS<3:0>			
bit 15							bit 8

U-0	U-0	U-0	U-0	U-0	R/W-0	R/W-0	R/W-0
—	—	—	—	—	IUE	OSYNC	UDIS
bit 7							bit 0

Legend:			
R = Readable bit	W = Writable bit	U = Unimplemented bit, read as ‘0’	
-n = Value at POR	‘1’ = Bit is set	‘0’ = Bit is cleared	x = Bit is unknown

bit 15-12 **Unimplemented:** Read as ‘0’

bit 11-8 **SEVOPS<3:0>:** PWM Special Event Trigger Output Postscale Select bits

1111 = 1:16 postscale

•

•

•

0001 = 1:2 postscale

0000 = 1:1 postscale

bit 7-3 **Unimplemented:** Read as ‘0’

bit 2 **IUE:** Immediate Update Enable bit

1 = Updates to the active PxDC registers are immediate

0 = Updates to the active PxDC registers are synchronized to the PWM time base

bit 1 **OSYNC:** Output Override Synchronization bit

1 = Output overrides via the PxOVDCON register are synchronized to the PWM time base

0 = Output overrides via the PxOVDCON register occur on next TCY boundary

bit 0 **UDIS:** PWM Update Disable bit

1 = Updates from Duty Cycle and Period Buffer registers are disabled

0 = Updates from Duty Cycle and Period Buffer registers are enabled

 © 2007 Microchip Technology Inc.

查询"DSPIC33FJ12MC02ESP"供应商

REGISTER 14-7: PxDTCON1: DEAD-TIME CONTROL REGISTER 1

R/W-0	R/W-0	R/W-0	R/W-0	R/W-0	R/W-0	R/W-0	R/W-0
DTBPS<1:0>		DTB<5:0>					
bit 15							bit 8

R/W-0	R/W-0	R/W-0	R/W-0	R/W-0	R/W-0	R/W-0	R/W-0
DTAPS<1:0>		DTA<5:0>					
bit 7							bit 0

Legend:			
R = Readable bit	W = Writable bit	U = Unimplemented bit, read as ‘0’	
-n = Value at POR	‘1’ = Bit is set	‘0’ = Bit is cleared	x = Bit is unknown

bit 15-14 **DTBPS<1:0>:** Dead-Time Unit B Prescale Select bits
11 = Clock period for Dead-Time Unit B is 8 TCY
10 = Clock period for Dead-Time Unit B is 4 TCY
01 = Clock period for Dead-Time Unit B is 2 TCY
00 = Clock period for Dead-Time Unit B is TCY

bit 13-8 **DTB<5:0>:** Unsigned 6-bit Dead-Time Value for Dead-Time Unit B bits

bit 7-6 **DTAPS<1:0>:** Dead-Time Unit A Prescale Select bits
11 = Clock period for Dead-Time Unit A is 8 TCY
10 = Clock period for Dead-Time Unit A is 4 TCY
01 = Clock period for Dead-Time Unit A is 2 TCY
00 = Clock period for Dead-Time Unit A is TCY

bit 5-0 **DTA<5:0>:** Unsigned 6-bit Dead-Time Value for Dead-Time Unit A bits

查询"DSPIC33FJ12MC02ESP"供应商

REGISTER 14-8: PxDTCON2: DEAD-TIME CONTROL REGISTER 2 (1)

U-0	U-0	U-0	U-0	U-0	U-0	U-0	U-0
—	—	—	—	—	—	—	—
bit 15							bit 8

U-0	U-0	R/W-0	R/W-0	R/W-0	R/W-0	R/W-0	R/W-0
—	—	DTS3A	DTS3I	DTS2A	DTS2I	DTS1A	DTS1I
bit 7							bit 0

Legend:			
R = Readable bit	W = Writable bit	U = Unimplemented bit, read as ‘0’	
-n = Value at POR	‘1’ = Bit is set	‘0’ = Bit is cleared	x = Bit is unknown

bit 15-6 **Unimplemented:** Read as ‘0’

bit 5 **DTS3A:** Dead-Time Select for PWM3 Signal Going Active bit
1 = Dead time provided from Unit B
0 = Dead time provided from Unit A

bit 4 **DTS3I:** Dead-Time Select for PWM3 Signal Going Inactive bit
1 = Dead time provided from Unit B
0 = Dead time provided from Unit A

bit 3 **DTS2A:** Dead-Time Select for PWM2 Signal Going Active bit
1 = Dead time provided from Unit B
0 = Dead time provided from Unit A

bit 2 **DTS2I:** Dead-Time Select for PWM2 Signal Going Inactive bit
1 = Dead time provided from Unit B
0 = Dead time provided from Unit A

bit 1 **DTS1A:** Dead-Time Select for PWM1 Signal Going Active bit
1 = Dead time provided from Unit B
0 = Dead time provided from Unit A

bit 0 **DTS1I:** Dead-Time Select for PWM1 Signal Going Inactive bit
1 = Dead time provided from Unit B
0 = Dead time provided from Unit A

Note 1: PWM2 supports only 1 PWM I/O pin pair.

 © 2007 Microchip Technology Inc.

查询"DSPIC33FJ12MC02ESP"供应商

REGISTER 14-9: PxFLTACON: FAULT A CONTROL REGISTER(1)

U-0	U-0	R/W-0	R/W-0	R/W-0	R/W-0	R/W-0	R/W-0
—	—	FAOV3H	FAOV3L	FAOV2H	FAOV2L	FAOV1H	FAOV1L
bit 15							bit 8

R/W-0	U-0	U-0	U-0	U-0	R/W-0	R/W-0	R/W-0
FLTAM	—	—	—	—	FAEN3	FAEN2	FAEN1
bit 7							bit 0

Legend:			
R = Readable bit	W = Writable bit	U = Unimplemented bit, read as ‘0’	
-n = Value at POR	‘1’ = Bit is set	‘0’ = Bit is cleared	x = Bit is unknown

bit 15-14 **Unimplemented:** Read as ‘0’

bit 13-8 **FAOVxH<3:1>:FAOVxL<3:1>:** Fault Input A PWM Override Value bits
1 = The PWM output pin is driven active on an external Fault input event
0 = The PWM output pin is driven inactive on an external Fault input event

bit 7 **FLTAM:** Fault A Mode bit
1 = The Fault A input pin functions in the Cycle-by-Cycle mode
0 = The Fault A input pin latches all control pins to the programmed states in PxFLTACON<13:8>

bit 6-3 **Unimplemented:** Read as ‘0’

bit 2 **FAEN3:** Fault Input A Enable bit
1 = PWMxH3/PWMxL3 pin pair is controlled by Fault Input A
0 = PWMxH3/PWMxL3 pin pair is not controlled by Fault Input A

bit 1 **FAEN2:** Fault Input A Enable bit
1 = PWMxH2/PWMxL2 pin pair is controlled by Fault Input A
0 = PWMxH2/PWMxL2 pin pair is not controlled by Fault Input A

bit 0 **FAEN1:** Fault Input A Enable bit
1 = PWMxH1/PWMxL1 pin pair is controlled by Fault Input A
0 = PWMxH1/PWMxL1 pin pair is not controlled by Fault Input A

Note 1: PWM2 supports only 1 PWM I/O pin pair.

查询"DSPIC33FJ12MC02ESP"供应商

REGISTER 14-10: PxOVDCON: OVERRIDE CONTROL REGISTER(1)

U-0	U-0	R/W-1	R/W-1	R/W-1	R/W-1	R/W-1	R/W-1
—	—	POVD3H	POVD3L	POVD2H	POVD2L	POVD1H	POVD1L
bit 15							bit 8

U-0	U-0	R/W-0	R/W-0	R/W-0	R/W-0	R/W-0	R/W-0
—	—	POUT3H	POUT3L	POUT2H	POUT2L	POUT1H	POUT1L
bit 7							bit 0

Legend:			
R = Readable bit	W = Writable bit	U = Unimplemented bit, read as ‘0’	
-n = Value at POR	‘1’ = Bit is set	‘0’ = Bit is cleared	x = Bit is unknown

bit 15-14 **Unimplemented:** Read as ‘0’

bit 13-8 **POVDxH<3:1>:POVDxL<3:1>:** PWM Output Override bits
1 = Output on PWMx I/O pin is controlled by the PWM generator
0 = Output on PWMx I/O pin is controlled by the value in the corresponding POUTxH:POUTxL bit

bit 7-6 **Unimplemented:** Read as ‘0’

bit 5-0 **POUTxH<3:1>:POUTxL<3:1>:** PWM Manual Output bits
1 = PWMx I/O pin is driven active when the corresponding POVDxH:POVDxL bit is cleared
0 = PWMx I/O pin is driven inactive when the corresponding POVDxH:POVDxL bit is cleared

Note 1: PWM2 supports only 1 PWM I/O pin pair.

 © 2007 Microchip Technology Inc.

查询"DSPIC33FJ12MC02ESP"供应商

REGISTER 14-11: PxDC1: PWM DUTY CYCLE REGISTER 1

R/W-0	R/W-0	R/W-0	R/W-0	R/W-0	R/W-0	R/W-0	R/W-0
PDC1<15:8>							
bit 15							bit 8

R/W-0	R/W-0	R/W-0	R/W-0	R/W-0	R/W-0	R/W-0	R/W-0
PDC1<7:0>							
bit 7							bit 0

Legend:			
R = Readable bit	W = Writable bit	U = Unimplemented bit, read as ‘0’	
-n = Value at POR	‘1’ = Bit is set	‘0’ = Bit is cleared	x = Bit is unknown

bit 15-0 **PDC1<15:0>:** PWM Duty Cycle #1 Value bits

REGISTER 14-12: P1DC2: PWM DUTY CYCLE REGISTER 2

R/W-0	R/W-0	R/W-0	R/W-0	R/W-0	R/W-0	R/W-0	R/W-0
PDC2<15:8>							
bit 15							bit 8

R/W-0	R/W-0	R/W-0	R/W-0	R/W-0	R/W-0	R/W-0	R/W-0
PDC2<7:0>							
bit 7							bit 0

Legend:			
R = Readable bit	W = Writable bit	U = Unimplemented bit, read as ‘0’	
-n = Value at POR	‘1’ = Bit is set	‘0’ = Bit is cleared	x = Bit is unknown

bit 15-0 **PDC2<15:0>:** PWM Duty Cycle #2 Value bits

查询"DSPIC33FJ12MC02ESP"供应商

REGISTER 14-13: P1DC3: PWM DUTY CYCLE REGISTER 3

R/W-0	R/W-0	R/W-0	R/W-0	R/W-0	R/W-0	R/W-0	R/W-0
PDC3<15:8>							
bit 15							bit 8

R/W-0	R/W-0	R/W-0	R/W-0	R/W-0	R/W-0	R/W-0	R/W-0
PDC3<7:0>							
bit 7							bit 0

Legend:			
R = Readable bit	W = Writable bit	U = Unimplemented bit, read as ‘0’	
-n = Value at POR	‘1’ = Bit is set	‘0’ = Bit is cleared	x = Bit is unknown

bit 15-0 **PDC3<15:0>:** PWM Duty Cycle #3 Value bits

 © 2007 Microchip Technology Inc.

查询"DSPIC33FJ12MC02ESP"供应商

15.0 QUADRATURE ENCODER INTERFACE (QEI) MODULE

Note:	This data sheet summarizes the features of the dsPIC33FJ12MC201/202 devices. It is not intended to be a comprehensive reference source. To complement the information in this data sheet, refer to the *"dsPIC33F Family Reference Manual"*. Please see the Microchip web site (www.microchip.com) for the latest dsPIC33F Family Reference Manual chapters.

This section describes the Quadrature Encoder Interface (QEI) module and associated operational modes. The QEI module provides the interface to incremental encoders for obtaining mechanical position data.

The operational features of the QEI include:

- Three input channels for two phase signals and index pulse
- 16-bit up/down position counter
- Count direction status
- Position Measurement (x2 and x4) mode
- Programmable digital noise filters on inputs
- Alternate 16-bit Timer/Counter mode
- Quadrature Encoder Interface interrupts

These operating modes are determined by setting the appropriate bits, QEIM<2:0> in (QEICON<10:8>). Figure 15-1 depicts the Quadrature Encoder Interface block diagram.

FIGURE 15-1: QUADRATURE ENCODER INTERFACE BLOCK DIAGRAM

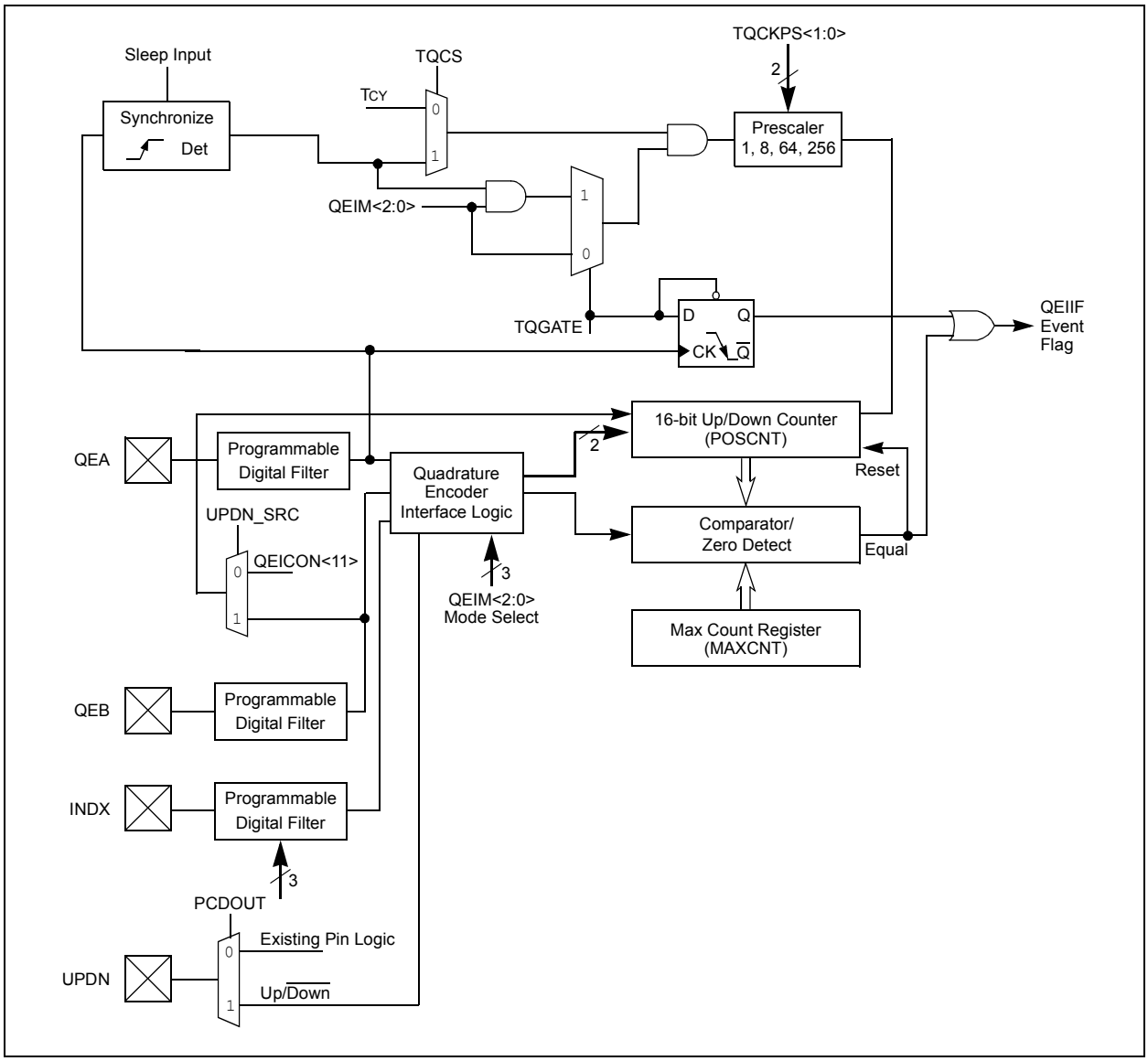

查询"DSPIC33FJ12MC02ESP"供应商

15.1 Quadrature Encoder Interface Logic

A typical incremental (or optical) encoder has three outputs: Phase A, Phase B and an index pulse. These signals are useful and often required in position and speed control of ACIM and SR motors.

The two channels, Phase A (QEA) and Phase B (QEB), have a unique relationship. If Phase A leads Phase B, the direction of the motor is deemed positive or forward. If Phase A lags Phase B, the direction of the motor is deemed negative or reverse.

A third channel, termed index pulse, occurs once per revolution and is used as a reference to establish an absolute position. The index pulse coincides with Phase A and Phase B, both low.

15.2 16-bit Up/Down Position Counter Mode

The 16-bit up/down counter counts up or down on every count pulse, which is generated by the difference of the Phase A and Phase B input signals. The counter acts as an integrator whose count value is proportional to position. The direction of the count is determined by the UPDN signal, which is generated by the Quadrature Encoder Interface logic.

15.2.1 POSITION COUNTER ERROR CHECKING

Position counter error checking in the QEI is provided for and indicated by the CNTERR bit (QEICON<15>). The error checking applies only when the position counter is configured for Reset on the Index Pulse modes (QEIM<2:0> = `110` or `100`). In these modes, the contents of the POSCNT register are compared with the values (0xFFFF or MAXCNT + 1, depending on direction).

If these values are detected, the CNTERR bit is set, generating an error condition, and a QEI counter error interrupt is generated. The QEI counter error interrupt can be disabled by setting the CEID bit (DFLTCON<8>).

The position counter continues to count encoder edges after an error has been detected. The POSCNT register continues to count up/down until a natural rollover/underflow. No interrupt is generated for the natural rollover/underflow event.

The CNTERR bit is a read/write bit and is reset in software by the user application.

15.2.2 POSITION COUNTER RESET

The Position Counter Reset Enable bit, POSRES (QEI<2>), controls whether the position counter is reset when the index pulse is detected. This bit is applicable only when QEIM<2:0> = `100` or `110`.

If the POSRES bit is set to '`1`', the position counter is reset when the index pulse is detected. If the POSRES bit is set to '`0`', the position counter is not reset when the index pulse is detected. The position counter continues counting up or down, and is reset on the rollover or underflow condition.

The interrupt is still generated on the detection of the index pulse and not on the position counter overflow/underflow.

15.2.3 COUNT DIRECTION STATUS

The QEI logic generates a UPDN signal, based upon the relationship between Phase A and Phase B. In addition to the output pin, the state of this internal UPDN signal is supplied to an SFR bit, UPDN (QEICON<11>), as a read-only bit. To place the state of this signal on an I/O pin, the SFR bit, PCDOUT (QEICON<6>), must be set to '`1`'.

15.3 Position Measurement Mode

Two measurement modes are supported, x2 and x4. These modes are selected by the QEIM<2:0> mode select bits located in SFR QEICON<10:8>.

When control bits QEIM<2:0> = `100` or `101`, the x2 Measurement mode is selected and the QEI logic only looks at the Phase A input for the position counter increment rate. Every rising and falling edge of the Phase A signal causes the position counter to be incremented or decremented. The Phase B signal is still used for the determination of the counter direction.

Within the x2 Measurement mode, there are two variations of how the position counter is reset:

- Position counter reset by detection of index pulse, QEIM<2:0> = `100`
- Position counter reset by match with MAXCNT, QEIM<2:0> = `101`

When control bits QEIM<2:0> = `110` or `111`, the x4 Measurement mode is selected and the QEI logic looks at both edges of the Phase A and Phase B input signals. Every edge of both signals causes the position counter to increment or decrement.

Within the x4 Measurement mode, the position counter can be reset two ways:

- Position counter reset by detection of index pulse, QEIM<2:0> = `110`.
- Position counter reset by match with MAXCNT, QEIM<2:0> = `111`.

The x4 Measurement mode provides for finer resolution data (more position counts) for determining motor position.

 © 2007 Microchip Technology Inc.

查询"DSPIC33FJ12MC02ESP"供应商

15.4 Programmable Digital Noise Filters

The digital noise filter section of the module is responsible for rejecting noise on the incoming capture or quadrature signals. Schmitt Trigger inputs and a 3-clock cycle delay filter combine to reject low-level noise and large, short-duration noise spikes that typically occur in noise prone applications, such as a motor system.

The filter ensures that the filtered output signal is not permitted to change until a stable value has been registered for three consecutive clock cycles.

For the QEA, QEB and INDX pins, the clock divide frequency for the digital filter is programmed by bits QECK<2:0> (DFLTCON<6:4>), and are derived from the base instruction cycle, TCY.

To enable the filter output for channels QEA, QEB and INDX, the QEOUT bit must be '1'. The filter network for all channels is disabled on POR.

15.5 Alternate 16-bit Timer/Counter

When the QEI module is not configured for the QEI mode, QEIM<2:0> = 001, the module can be configured as a simple 16-bit timer/counter. The setup and control of the auxiliary timer is accomplished through the QEICON SFR register. This timer functions identically to Timer1. The QEA pin is used as the timer clock input.

When configured as a timer, the POSCNT register serves as the Timer Count register, and the MAXCNT register serves as the Period register. When a Timer/Period register match occurs, the QEI interrupt flag is asserted.

The only difference between the general purpose timers and this timer is the external up/down input select. When the UPDN pin is asserted high, the timer increments up. When the UPDN pin is asserted low, the timer is decremented.

Note:	Changing the operational mode (for example, from QEI to timer or vice versa) will not affect the Timer/Position Count register contents.

The UPDN control/status bit (QEICON<11>) can be used to select the count direction state of the Timer register. When UPDN = 1, the timer counts up. When UPDN = 0, the timer counts down.

In addition, control bit UPDN_SRC, (in QEICON<0>), determines whether the timer count direction state is based on the logic state written into the UPDN control/status bit (QEICON<11>) or the QEB pin state:

- When UPDN_SRC = 1, the timer count direction is controlled from the QEB pin.
- When UPDN_SRC = 0, the timer count direction is controlled by the UPDN bit.

Note:	This alternate timer does not support the External Asynchronous Counter mode of operation. If the program uses an external clock source, the clock will automatically be synchronized to the internal instruction cycle.

15.6 QEI Module Operation During CPU Sleep Mode

During CPU Sleep mode, the following are true for the QEI module:

- The QEI module is halted.
- The timer does not operate because the internal clocks are disabled.

15.7 QEI Module Operation During CPU Idle Mode

Since the QEI module can function as a Quadrature Encoder Interface, or as a 16-bit timer, this section describes operation of the module in both modes.

15.7.1 QEI OPERATION DURING CPU IDLE MODE

When the CPU is placed in Idle mode, the QEI module will operate if QEISIDL (QEICON<13>) = 0. This bit defaults to a logic '0' upon executing POR. To halt the QEI module during CPU Idle mode, QEISIDL should be set to '1'.

查询"DSPIC33FJ12MC02ESP"供应商

15.7.2 TIMER OPERATION DURING CPU IDLE MODE

When the CPU is placed in Idle mode and the QEI module is configured in 16-bit Timer mode, the 16-bit timer will operate if QEISIDL (QEICON<13>) = 0. This bit defaults to a logic '0' upon executing POR. To halt the timer module during CPU Idle mode, QEISIDL should be set to '1'.

If the QEISIDL bit is cleared, the timer will function normally as if CPU Idle mode had not been entered.

15.8 Quadrature Encoder Interface Interrupts

The Quadrature Encoder Interface can generate an interrupt on occurrence of the following events:

- 16-bit up/down position counter rollover/underflow
- Detection of qualified index pulse
- CNTERR bit is set
- Timer period match event (overflow/underflow)
- Gate accumulation event

The QEI Interrupt Flag bit, QEIIF in the IFS3 register, is asserted upon occurrence of any of these events. The QEIIF bit must be cleared in software.

Enabling an interrupt is accomplished via the respective enable bit, QEIIE, in the IEC3 register.

15.9 Control and Status Registers

The QEI module has four user-accessible registers, accessible in either Byte or Word mode:

- Control/Status Register (QEICON) – Allows control of the QEI operation and status flags indicating the module state.
- Digital Filter Control Register (DFLTCON) – Allows control of the digital input filter operation.
- Position Count Register (POSCNT) – Allows reading and writing of the 16-bit position counter.
- Maximum Count Register (MAXCNT) – Holds a value that is compared to the POSCNT counter in some operations.

Note:	The POSCNT register allows byte accesses,. However, reading the register in Byte mode can result in partially updated values in subsequent reads. Either use Word mode reads/writes, or ensure that the counter is not counting during Byte operations.

 © 2007 Microchip Technology Inc.

查询"DSPIC33FJ12MC02ESP"供应商

REGISTER 15-1: QEICON: QEI CONTROL REGISTER

R/W-0	U-0	R/W-0	R-0	R/W-0	R/W-0	R/W-0	R/W-0
CNTERR	—	QEISIDL	INDEX	UPDN	QEIM<2:0>		
bit 15							bit 8

R/W-0	R/W-0	R/W-0	R/W-0	R/W-0	R/W-0	R/W-0	R/W-0
SWPAB	PCDOUT	TQGATE	TQCKPS<1:0>		POSRES	TQCS	UPDN_SRC
bit 7							bit 0

Legend:			
R = Readable bit	W = Writable bit	U = Unimplemented bit, read as ‘0’	
-n = Value at POR	‘1’ = Bit is set	‘0’ = Bit is cleared	x = Bit is unknown

bit 15 **CNTERR:** Count Error Status Flag bit
1 = Position count error has occurred
0 = No position count error has occurred

Note: CNTERR flag only applies when QEIM<2:0> = ‘110’ or ‘100’.

bit 14 **Unimplemented:** Read as ‘0’

bit 13 **QEISIDL:** Stop in Idle Mode bit
1 = Discontinue module operation when device enters Idle mode
0 = Continue module operation in Idle mode

bit 12 **INDEX:** Index Pin State Status bit (Read-Only)
1 = Index pin is High
0 = Index pin is Low

bit 11 **UPDN:** Position Counter Direction Status bit
1 = Position Counter Direction is positive (+)
0 = Position Counter Direction is negative (-)
(Read-only bit when QEIM<2:0> = ‘1XX’)
(Read/Write bit when QEIM<2:0> = ‘001’)

bit 10-8 **QEIM<2:0>:** Quadrature Encoder Interface Mode Select bits
111 = Quadrature Encoder Interface enabled (x4 mode) with position counter reset by match (MAXCNT)
110 = Quadrature Encoder Interface enabled (x4 mode) with Index Pulse reset of position counter
101 = Quadrature Encoder Interface enabled (x2 mode) with position counter reset by match (MAXCNT)
100 = Quadrature Encoder Interface enabled (x2 mode) with Index Pulse reset of position counter
011 = Unused (Module disabled)
010 = Unused (Module disabled)
001 = Starts 16-bit Timer
000 = Quadrature Encoder Interface/Timer off

bit 7 **SWPAB:** Phase A and Phase B Input Swap Select bit
1 = Phase A and Phase B inputs swapped
0 = Phase A and Phase B inputs not swapped

bit 6 **PCDOUT:** Position Counter Direction State Output Enable bit
1 = Position Counter Direction Status Output Enable (QEI logic controls state of I/O pin)
0 = Position Counter Direction Status Output Disabled (Normal I/O pin operation)

bit 5 **TQGATE:** Timer Gated Time Accumulation Enable bit
1 = Timer gated time accumulation enabled
0 = Timer gated time accumulation disabled

查询"DSPIC33FJ12MC02ESP"供应商

REGISTER 15-1: QEICON: QEI CONTROL REGISTER (CONTINUED)

bit 4-3 **TQCKPS<1:0>:** Timer Input Clock Prescale Select bits
11 = 1:256 prescale value
10 = 1:64 prescale value
01 = 1:8 prescale value
00 = 1:1 prescale value
(Prescaler utilized for 16-bit Timer mode only)

bit 2 **POSRES:** Position Counter Reset Enable bit
1 = Index Pulse resets Position Counter
0 = Index Pulse does not reset Position Counter

Note: Bit applies only when QEIM<2:0> = 100 or 110.

bit 1 **TQCS:** Timer Clock Source Select bit
1 = External clock from pin QEA (on the rising edge)
0 = Internal clock (TCY)

bit 0 **UPDN_SRC:** Position Counter Direction Selection Control bit
1 = QEB pin state defines position counter direction
0 = Control/Status bit, UPDN (QEICON<11>), defines timer counter (POSCNT) direction

Note: When configured for QEI mode, control bit is a ‘don’t care’.

 © 2007 Microchip Technology Inc.

查询"DSPIC33FJ12MC02ESP"供应商

REGISTER 15-2: DFLTCON: DIGITAL FILTER CONTROL REGISTER

U-0	U-0	U-0	U-0	U-0	R/W-0	R/W-0	R/W-0
—	—	—	—	—	IMV<2:0>		CEID
bit 15							bit 8

R/W-0	R/W-0	U-0	U-0	U-0	U-0
QEOUT	QECK<2:0>	—	—	—	—
bit 7					bit 0

Legend:			
R = Readable bit	W = Writable bit	U = Unimplemented bit, read as ‘0’	
-n = Value at POR	‘1’ = Bit is set	‘0’ = Bit is cleared	x = Bit is unknown

bit 15-11 **Unimplemented:** Read as ‘0’

bit 10-9 **IMV<1:0>:** Index Match Value bits – These bits allow the user application to specify the state of the QEA and QEB input pins during an Index pulse when the POSCNT register is to be reset.
In 4X Quadrature Count Mode:
IMV1= Required State of Phase B input signal for match on index pulse
IMV0= Required State of Phase A input signal for match on index pulse
In 2X Quadrature Count Mode:
IMV1= Selects Phase input signal for Index state match (0 = Phase A, 1 = Phase B)
IMV0= Required state of the selected Phase input signal for match on index pulse

bit 8 **CEID:** Count Error Interrupt Disable bit
1 = Interrupts due to count errors are disabled
0 = Interrupts due to count errors are enabled

bit 7 **QEOUT:** QEA/QEB/INDX Pin Digital Filter Output Enable bit
1 = Digital filter outputs enabled
0 = Digital filter outputs disabled (normal pin operation)

bit 6-4 **QECK<2:0>:** QEA/QEB/INDX Digital Filter Clock Divide Select Bits
111 = 1:256 Clock Divide
110 = 1:128 Clock Divide
101 = 1:64 Clock Divide
100 = 1:32 Clock Divide
011 = 1:16 Clock Divide
010 = 1:4 Clock Divide
001 = 1:2 Clock Divide
000 = 1:1 Clock Divide

bit 3-0 **Unimplemented:** Read as ‘0’

查询"DSPIC33FJ12MC02ESP"供应商

NOTES:

 © 2007 Microchip Technology Inc.

查询"DSPIC33FJ12MC02ESP"供应商

16.0 SERIAL PERIPHERAL INTERFACE (SPI)

Note:	This data sheet summarizes the features of the dsPIC33FJ12MC201/202 devices. It is not intended to be a comprehensive reference source. To complement the information in this data sheet, refer to the *"dsPIC33F Family Reference Manual"*. Please see the Microchip web site (www.microchip.com) for the latest dsPIC33F Family Reference Manual chapters.

The Serial Peripheral Interface (SPI) module is a synchronous serial interface useful for communicating with other peripheral or microcontroller devices. These peripheral devices can be serial EEPROMs, shift registers, display drivers, analog-to-digital converters, etc. The SPI module is compatible with SPI and SIOP from Motorola®.

Each SPI module consists of a 16-bit shift register, SPIxSR (where x = 1 or 2), used for shifting data in and out, and a buffer register, SPIxBUF. A control register, SPIxCON, configures the module. Additionally, a status register, SPIxSTAT, indicates status conditions.

The serial interface consists of 4 pins:

- SDIx (serial data input)
- SDOx (serial data output)
- SCKx (shift clock input or output)
- $\overline{\text{SS}}$x (active low slave select).

In Master mode operation, SCK is a clock output. In Slave mode, it is a clock input.

16.1 Interrupts

A series of 8 or 16 clock pulses shift out bits from the SPIxSR to SDOx pin and simultaneously shift in data from the SDIx pin. An interrupt is generated when the transfer is complete and the corresponding interrupt flag bit (SPI1IF) is set. This interrupt can be disabled through an interrupt enable bit (SPI1IE).

16.2 Receive Operations

The receive operation is double-buffered. When a complete byte is received, it is transferred from SPIxSR to SPIxBUF.

If the receive buffer is full when new data is being transferred from SPIxSR to SPIxBUF, the module sets the SPIROV bit, indicating an overflow condition. The transfer of the data from SPIxSR to SPIxBUF is not completed, and the new data is lost. The module will not respond to SCL transitions while SPIROV is '1', effectively disabling the module until SPIxBUF is read by user software.

16.3 Transmit Operations

Transmit writes are also double-buffered. The user application writes to SPIxBUF. When the Master or Slave transfer is completed, the contents of the shift register (SPIxSR) are moved to the receive buffer. If any transmit data has been written to the buffer register, the contents of the transmit buffer are moved to SPIxSR. The received data is thus placed in SPIxBUF and the transmit data in SPIxSR is ready for the next transfer.

Note:	Both the transmit buffer (SPIxTXB) and the receive buffer (SPIxRXB) are mapped to the same register address, SPIxBUF. Do not perform read-modify-write operations (such as bit-oriented instructions) on the SPIxBUF register.

16.4 SPI Setup: Master Mode

To set up the SPI module for the Master mode of operation:

1. If using interrupts:
   a) Clear the SPIxIF bit in the respective IFSn register.
   b) Set the SPIxIE bit in the respective IECn register.
   c) Write the SPIxIP bits in the respective IPCn register to set the interrupt priority.
2. Write the desired settings to the SPIxCON register with MSTEN (SPIxCON1<5>) = 1.
3. Clear the SPIROV bit (SPIxSTAT<6>).
4. Enable SPI operation by setting the SPIEN bit (SPIxSTAT<15>).
5. Write the data to be transmitted to the SPIxBUF register. Transmission (and reception) will start as soon as data is written to the SPIxBUF register.

查询"DSPIC33FJ12MC02ESP"供应商

16.5 SPI Setup: Slave Mode

To set up the SPI module for the Slave mode of operation:

1. Clear the SPIxBUF register.
2. If using interrupts:
   a) Clear the SPIxIF bit in the respective IFSn register.
   b) Set the SPIxIE bit in the respective IECn register.
   c) Write the SPIxIP bits in the respective IPCn register to set the interrupt priority.
3. Write the desired settings to the SPIxCON1 and SPIxCON2 registers with MSTEN (SPIxCON1<5>) = 0.
4. Clear the SMP bit.
5. If the CKE bit is set, then set the SSEN bit (SPIxCON1<7>) to enable the $\overline{SSx}$ pin.
6. Clear the SPIROV bit (SPIxSTAT<6>).
7. Enable SPI operation by setting the SPIEN bit (SPIxSTAT<15>).

The SPI module generates an interrupt indicating completion of a byte or word transfer, as well as a separate interrupt for all SPI error conditions.

FIGURE 16-1: SPI MODULE BLOCK DIAGRAM

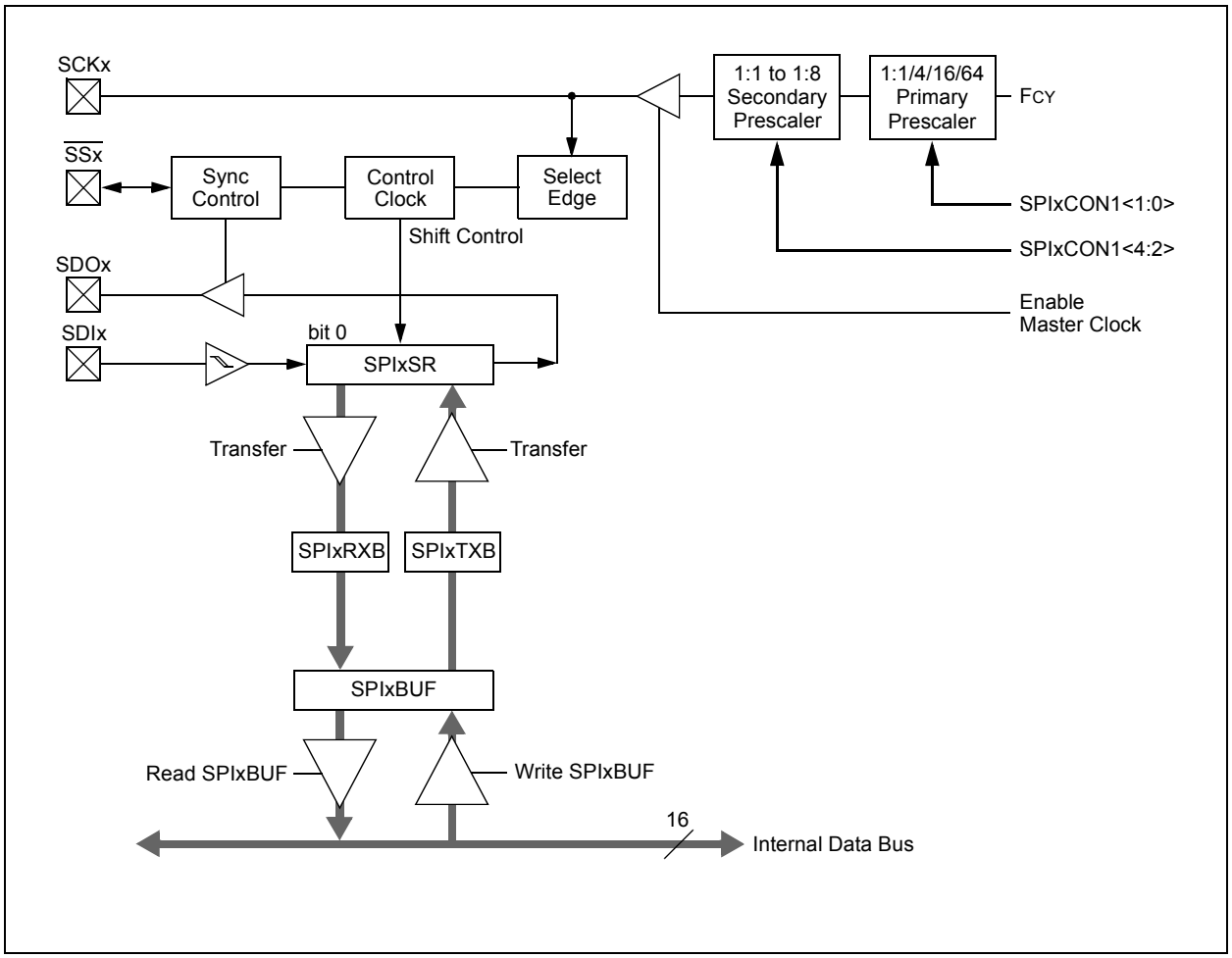

 © 2007 Microchip Technology Inc.

查询"DSPIC33FJ12MC02ESP"供应商

FIGURE 16-2: SPI MASTER/SLAVE CONNECTION

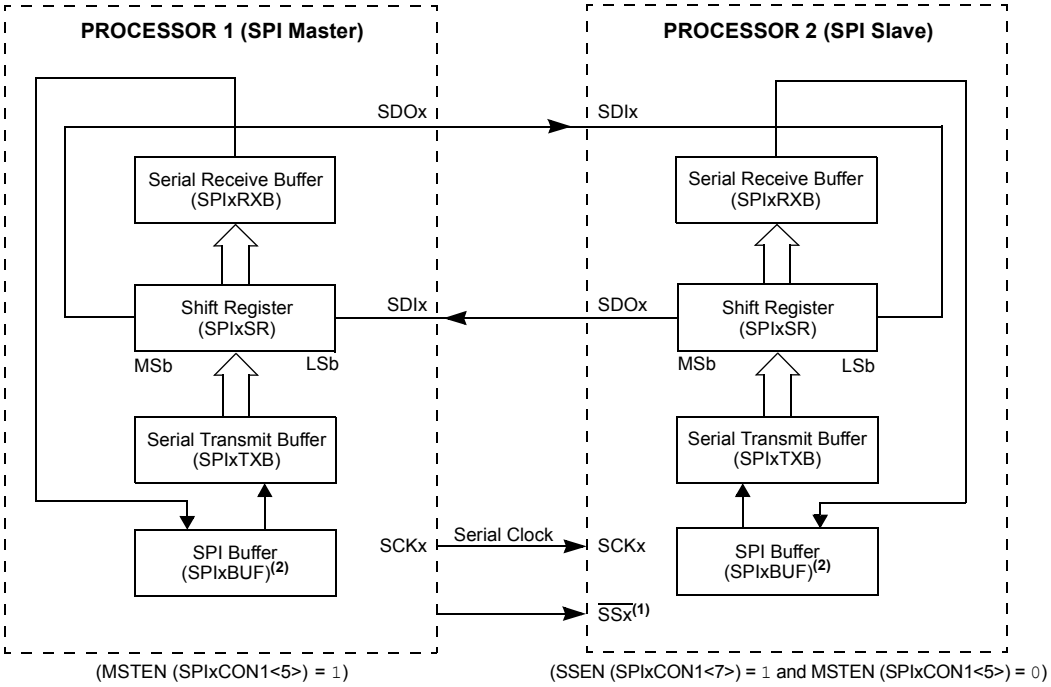

Note 1: Using the $\overline{SSx}$ pin in Slave mode of operation is optional.

2: User application must write transmit data to or read received data from SPIxBUF. The SPIxTXB and SPIxRXB registers are memory mapped to SPIxBUF.

FIGURE 16-3: SPI MASTER, FRAME MASTER CONNECTION DIAGRAM

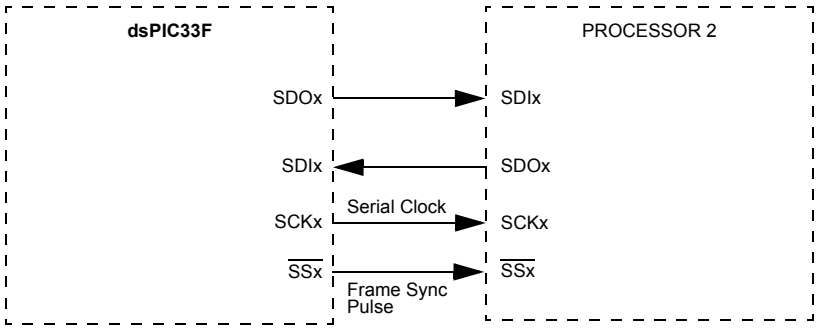

FIGURE 16-4: SPI MASTER, FRAME SLAVE CONNECTION DIAGRAM

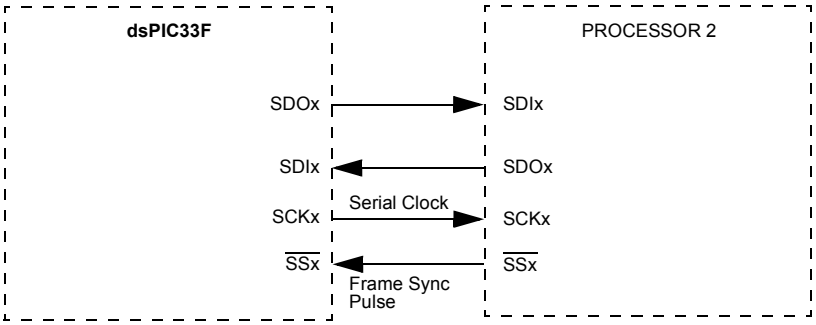

查询"DSPIC33FJ12MC02ESP"供应商

FIGURE 16-5: SPI SLAVE, FRAME MASTER CONNECTION DIAGRAM

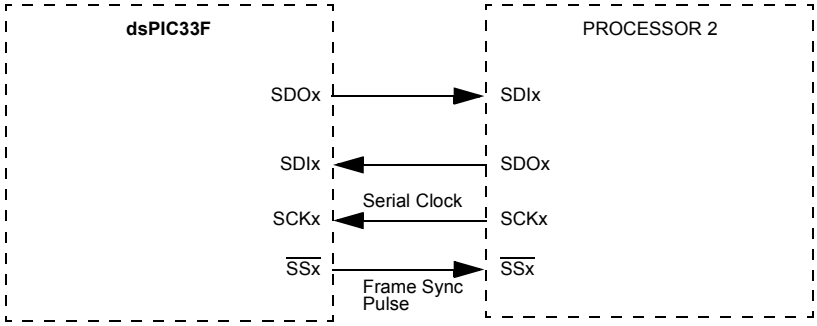

FIGURE 16-6: SPI SLAVE, FRAME SLAVE CONNECTION DIAGRAM

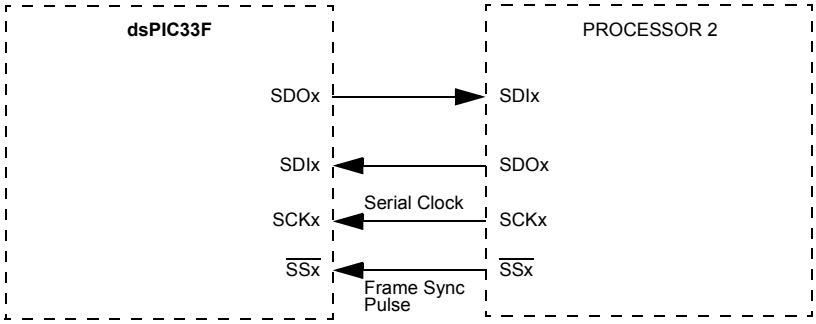

EQUATION 16-1: RELATIONSHIP BETWEEN DEVICE AND SPI CLOCK SPEED

$$F_{SCK} = \frac{F_{CY}}{\text{Primary Prescaler} * \text{Secondary Prescaler}}$$

TABLE 16-1: SAMPLE SCKx FREQUENCIES

FCY = 40 MHz		Secondary Prescaler Settings				
		1:1	2:1	4:1	6:1	8:1
Primary Prescaler Settings	1:1	Invalid	Invalid	10000	6666.67	5000
	4:1	10000	5000	2500	1666.67	1250
	16:1	2500	1250	625	416.67	312.50
	64:1	625	312.5	156.25	104.17	78.125
FCY = 5 MHz						
Primary Prescaler Settings	1:1	5000	2500	1250	833	625
	4:1	1250	625	313	208	156
	16:1	313	156	78	52	39
	64:1	78	39	20	13	10

Note: SCKx frequencies shown in kHz.

 © 2007 Microchip Technology Inc.

查询"DSPIC33FJ12MC02ESP"供应商

REGISTER 16-1: SPIxSTAT: SPIx STATUS AND CONTROL REGISTER

R/W-0	U-0	R/W-0	U-0	U-0	U-0	U-0	U-0
SPIEN	—	SPISIDL	—	—	—	—	—
bit 15							bit 8

U-0	R/C-0	U-0	U-0	U-0	U-0	R-0	R-0
—	SPIROV	—	—	—	—	SPITBF	SPIRBF
bit 7							bit 0

Legend:	C = Clearable bit		
R = Readable bit	W = Writable bit	U = Unimplemented bit, read as ‘0’	
-n = Value at POR	‘1’ = Bit is set	‘0’ = Bit is cleared	x = Bit is unknown

bit 15 **SPIEN:** SPIx Enable bit
1 = Enables module and configures SCKx, SDOx, SDIx and $\overline{SSx}$ as serial port pins
0 = Disables module

bit 14 **Unimplemented:** Read as ‘0’

bit 13 **SPISIDL:** Stop in Idle Mode bit
1 = Discontinue module operation when device enters Idle mode
0 = Continue module operation in Idle mode

bit 12-7 **Unimplemented:** Read as ‘0’

bit 6 **SPIROV:** Receive Overflow Flag bit
1 = A new byte/word is completely received and discarded. The user software has not read the previous data in the SPIxBUF register.
0 = No overflow has occurred.

bit 5-2 **Unimplemented:** Read as ‘0’

bit 1 **SPITBF:** SPIx Transmit Buffer Full Status bit
1 = Transmit not yet started, SPIxTXB is full
0 = Transmit started, SPIxTXB is empty
Automatically set in hardware when CPU writes SPIxBUF location, loading SPIxTXB
Automatically cleared in hardware when SPIx module transfers data from SPIxTXB to SPIxSR

bit 0 **SPIRBF:** SPIx Receive Buffer Full Status bit
1 = Receive complete, SPIxRXB is full
0 = Receive is not complete, SPIxRXB is empty
Automatically set in hardware when SPIx transfers data from SPIxSR to SPIxRXB
Automatically cleared in hardware when core reads SPIxBUF location, reading SPIxRXB

查询"DSPIC33FJ12MC02ESP"供应商

REGISTER 16-2: SPIxCON1: SPIx CONTROL REGISTER 1

U-0	U-0	U-0	R/W-0	R/W-0	R/W-0	R/W-0	R/W-0
—	—	—	DISSCK	DISSDO	MODE16	SMP	CKE(1)
bit 15							bit 8

R/W-0	R/W-0	R/W-0	R/W-0	R/W-0	R/W-0	R/W-0	R/W-0
SSEN	CKP	MSTEN	SPRE<2:0>			PPRE<1:0>	
bit 7							bit 0

Legend:			
R = Readable bit	W = Writable bit	U = Unimplemented bit, read as ‘0’	
-n = Value at POR	‘1’ = Bit is set	‘0’ = Bit is cleared	x = Bit is unknown

bit 15-13 **Unimplemented:** Read as ‘0’

bit 12 **DISSCK:** Disable SCKx pin bit (SPI Master modes only)
1 = Internal SPI clock is disabled, pin functions as I/O
0 = Internal SPI clock is enabled

bit 11 **DISSDO:** Disable SDOx pin bit
1 = SDOx pin is not used by module; pin functions as I/O
0 = SDOx pin is controlled by the module

bit 10 **MODE16:** Word/Byte Communication Select bit
1 = Communication is word-wide (16 bits)
0 = Communication is byte-wide (8 bits)

bit 9 **SMP:** SPIx Data Input Sample Phase bit
Master mode:
1 = Input data sampled at end of data output time
0 = Input data sampled at middle of data output time
Slave mode:
SMP must be cleared when SPIx is used in Slave mode.

bit 8 **CKE:** SPIx Clock Edge Select bit(1)
1 = Serial output data changes on transition from active clock state to Idle clock state (see bit 6)
0 = Serial output data changes on transition from Idle clock state to active clock state (see bit 6)

bit 7 **SSEN:** Slave Select Enable bit (Slave mode)
1 = $\overline{SSx}$ pin used for Slave mode
0 = $\overline{SSx}$ pin not used by module. Pin controlled by port function.

bit 6 **CKP:** Clock Polarity Select bit
1 = Idle state for clock is a high level; active state is a low level
0 = Idle state for clock is a low level; active state is a high level

bit 5 **MSTEN:** Master Mode Enable bit
1 = Master mode
0 = Slave mode

Note 1: The CKE bit is not used in the Framed SPI modes. Program this bit to ‘0’ for the Framed SPI modes (FRMEN = 1).

 © 2007 Microchip Technology Inc.

查询"DSPIC33FJ12MC02ESP"供应商

REGISTER 16-2: SPIxCON1: SPIx CONTROL REGISTER 1 (CONTINUED)

bit 4-2 **SPRE<2:0>:** Secondary Prescale bits (Master mode)
111 = Secondary prescale 1:1
110 = Secondary prescale 2:1
.
.
.
000 = Secondary prescale 8:1

bit 1-0 **PPRE<1:0>:** Primary Prescale bits (Master mode)
11 = Primary prescale 1:1
10 = Primary prescale 4:1
01 = Primary prescale 16:1
00 = Primary prescale 64:1

Note 1: The CKE bit is not used in the Framed SPI modes. Program this bit to '0' for the Framed SPI modes (FRMEN = 1).

查询"DSPIC33FJ12MC02ESP"供应商

REGISTER 16-3: SPIxCON2: SPIx CONTROL REGISTER 2

R/W-0	R/W-0	R/W-0	U-0	U-0	U-0	U-0	U-0
FRMEN	SPIFSD	FRMPOL	—	—	—	—	—
bit 15							bit 8

U-0	U-0	U-0	U-0	U-0	U-0	R/W-0	U-0
—	—	—	—	—	—	FRMDLY	—
bit 7							bit 0

Legend:			
R = Readable bit	W = Writable bit	U = Unimplemented bit, read as ‘0’	
-n = Value at POR	‘1’ = Bit is set	‘0’ = Bit is cleared	x = Bit is unknown

bit 15 **FRMEN**: Framed SPIx Support bit
1 = Framed SPIx support enabled ($\overline{SSx}$ pin used as frame sync pulse input/output)
0 = Framed SPIx support disabled

bit 14 **SPIFSD**: Frame Sync Pulse Direction Control bit
1 = Frame sync pulse input (slave)
0 = Frame sync pulse output (master)

bit 13 **FRMPOL**: Frame Sync Pulse Polarity bit
1 = Frame sync pulse is active-high
0 = Frame sync pulse is active-low

bit 12-2 **Unimplemented:** Read as ‘0’

bit 1 **FRMDLY**: Frame Sync Pulse Edge Select bit
1 = Frame sync pulse coincides with first bit clock
0 = Frame sync pulse precedes first bit clock

bit 0 **Unimplemented:** This bit must not be set to ‘1’ by the user application.

 © 2007 Microchip Technology Inc.

查询"DSPIC33FJ12MC02ESP"供应商

17.0 INTER-INTEGRATED CIRCUIT (I^2C)

Note:	This data sheet summarizes the features of the dsPIC33FJ12MC201/202 devices. It is not intended to be a comprehensive reference source. To complement the information in this data sheet, refer to the *"dsPIC33F Family Reference Manual"*. Please see the Microchip web site (www.microchip.com) for the latest dsPIC33F Family Reference Manual chapters.

The Inter-Integrated Circuit (I^2C) module provides complete hardware support for both Slave and Multi-Master modes of the I^2C serial communication standard, with a 16-bit interface.

The I^2C module has a 2-pin interface:

- The SCLx pin is clock.
- The SDAx pin is data.

The I^2C module offers the following key features:

- I^2C interface supporting both Master and Slave modes of operation.
- I^2C Slave mode supports 7 and 10-bit address.
- I^2C Master mode supports 7 and 10-bit address.
- I^2C port allows bidirectional transfers between master and slaves.
- Serial clock synchronization for I^2C port can be used as a handshake mechanism to suspend and resume serial transfer (SCLREL control).
- I^2C supports multi-master operation, detects bus collision and arbitrates accordingly.

17.1 Operating Modes

The hardware fully implements all the master and slave functions of the I^2C Standard and Fast mode specifications, as well as 7 and 10-bit addressing.

The I^2C module can operate either as a slave or a master on an I^2C bus.

The following types of I^2C operation are supported:

- I^2C slave operation with 7-bit address
- I^2C slave operation with 10-bit address
- I^2C master operation with 7- or 10-bit address

For details about the communication sequence in each of these modes, refer to the *"dsPIC33F Family Reference Manual"*. Please see the Microchip web site (www.microchip.com) for the latest dsPIC33F Family Reference Manual chapters.

17.2 I^2C Registers

I2CxCON and I2CxSTAT are control and status registers, respectively. The I2CxCON register is readable and writable. The lower six bits of I2CxSTAT are read-only. The remaining bits of the I2CSTAT are read/write:

- I2CxRSR is the shift register used for shifting data.
- I2CxRCV is the receive buffer and the register to which data bytes are written, or from which data bytes are read.
- I2CxTRN is the transmit register to which bytes are written during a transmit operation.
- The I2CxADD register holds the slave address.
- A status bit, ADD10, indicates 10-bit Address mode.
- The I2CxBRG acts as the Baud Rate Generator (BRG) reload value.

In receive operations, I2CxRSR and I2CxRCV together form a double-buffered receiver. When I2CxRSR receives a complete byte, it is transferred to I2CxRCV, and an interrupt pulse is generated.

17.3 I^2C Interrupts

The I^2C module generates two interrupt flags:

- MI2CxIF (I^2C Master Events Interrupt flag)
- SI2CxIF (I^2C Slave Events Interrupt flag).

A separate interrupt is generated for all I^2C error conditions.

17.4 Baud Rate Generator

In I^2C Master mode, the reload value for the Baud Rate Generator (BRG) is located in the I2CxBRG register. When the BRG is loaded with this value, the BRG counts down to zero and stops until another reload has taken place. If clock arbitration is taking place, for example, the BRG is reloaded when the SCLx pin is sampled high.

As per the I^2C standard, F_{SCL} can be 100 kHz or 400 kHz. However, the user application can specify any baud rate up to 1 MHz. I2CxBRG values of '0' or '1' are illegal.

EQUATION 17-1: SERIAL CLOCK RATE

$$I2CxBRG = \left(\frac{F_{CY}}{F_{SCL}} - \frac{F_{CY}}{10{,}000{,}000}\right) - 1$$

查询"DSPIC33FJ12MC02ESP"供应商

FIGURE 17-1: I²C™ BLOCK DIAGRAM (x = 1)

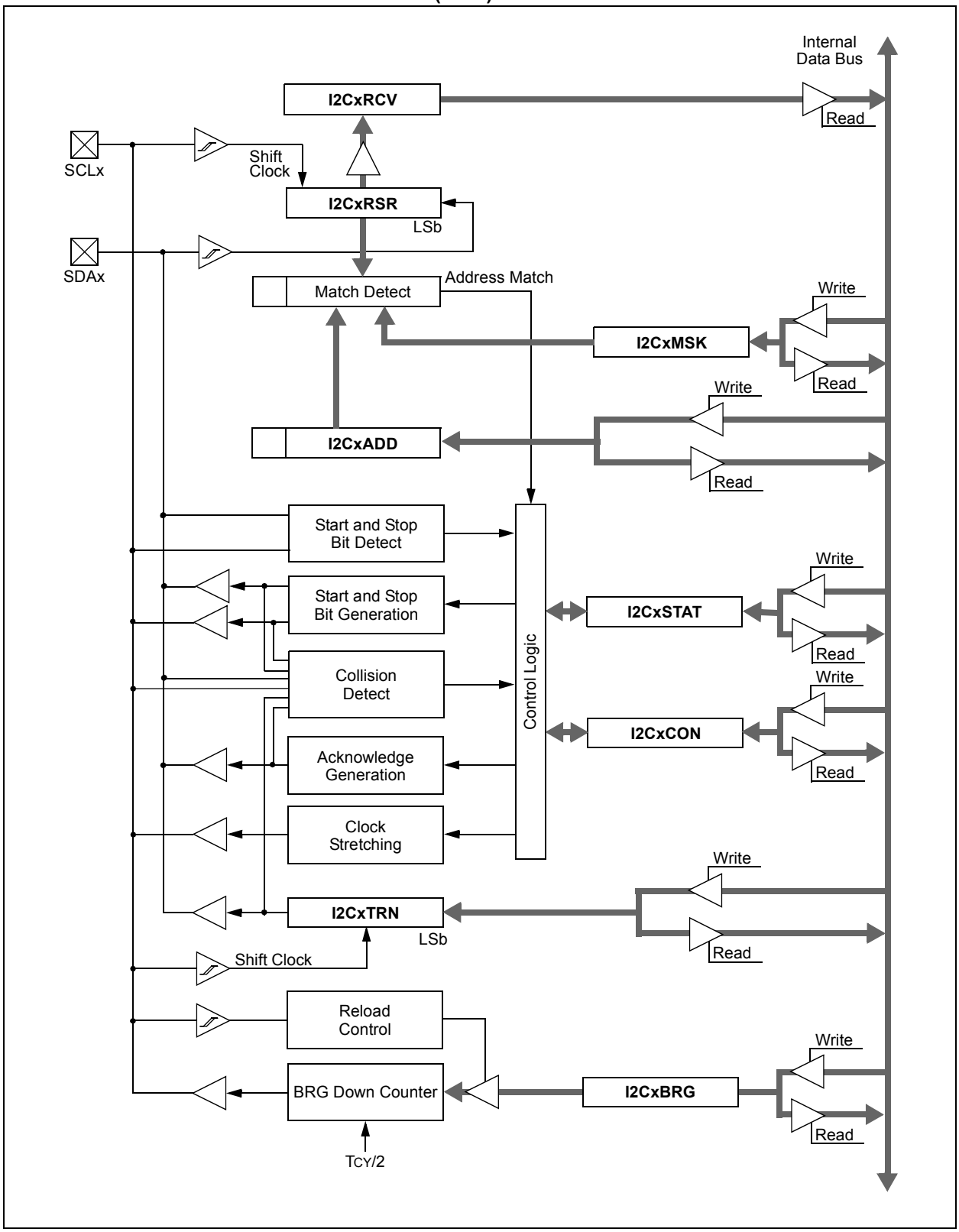

 © 2007 Microchip Technology Inc.

查询"DSPIC33FJ12MC02ESP"供应商

17.5 I²C Module Addresses

The 10-bit I2CxADD register contains the Slave mode addresses.

If the A10M bit (I2CxCON<10>) is '0', the address is interpreted by the module as a 7-bit address. When an address is received, it is compared to the 7 Least Significant bits of the I2CxADD register.

If the A10M bit is '1', the address is assumed to be a 10-bit address. When an address is received, it is compared with the binary value, '11110 A9 A8' (where A9 and A8 are two Most Significant bits of I2CxADD). If that value matches, the next address will be compared with the Least Significant 8 bits of I2CxADD, as specified in the 10-bit addressing protocol.

TABLE 17-1: 7-BIT I²C™ SLAVE ADDRESSES SUPPORTED BY dsPIC33FJ12MC201/202

0x00	General call address or Start byte
0x01-0x03	Reserved
0x04-0x07	Hs mode Master codes
0x08-0x77	Valid 7-bit addresses
0x78-0x7b	Valid 10-bit addresses (lower 7 bits)
0x7c-0x7f	Reserved

17.6 Slave Address Masking

The I2CxMSK register (Register 17-3) designates address bit positions as "don't care" for both 7-bit and 10-bit Address modes. Setting a particular bit location (= 1) in the I2CxMSK register causes the slave module to respond, whether the corresponding address bit value is a '0' or '1'. For example, when I2CxMSK is set to '00100000', the Slave module will detect both addresses, '0000000' and '00100000'.

To enable address masking, the IPMI (Intelligent Peripheral Management Interface) must be disabled by clearing the IPMIEN bit (I2CxCON<11>).

17.7 IPMI Support

The control bit IPMIEN enables the module to support the Intelligent Peripheral Management Interface (IPMI). When this bit is set, the module accepts and acts upon all addresses.

17.8 General Call Address Support

The general call address can address all devices. When this address is used, all devices should, in theory, respond with an Acknowledgement.

The general call address is one of eight addresses reserved for specific purposes by the I²C protocol. It consists of all '0's with R_W = 0.

The general call address is recognized when the General Call Enable (GCEN) bit is set (I2CxCON<7> = 1). When the interrupt is serviced, the source for the interrupt can be checked by reading the contents of the I2CxRCV to determine if the address was device-specific or a general call address.

17.9 Automatic Clock Stretch

In Slave modes, the module can synchronize buffer reads and write to the master device by clock stretching.

17.9.1 TRANSMIT CLOCK STRETCHING

Both 10-bit and 7-bit Transmit modes implement clock stretching by asserting the SCLREL bit after the falling edge of the ninth clock, if the TBF bit is cleared, indicating the buffer is empty.

In Slave Transmit modes, clock stretching is always performed, irrespective of the STREN bit. The user's ISR must set the SCLREL bit before transmission is allowed to continue. By holding the SCLx line low, the user application has time to service the ISR and load the contents of the I2CxTRN before the master device can initiate another transmit sequence.

17.9.2 RECEIVE CLOCK STRETCHING

The STREN bit in the I2CxCON register can be used to enable clock stretching in Slave Receive mode. When the STREN bit is set, the SCLx pin will be held low at the end of each data receive sequence.

The user's ISR must set the SCLREL bit before reception is allowed to continue. By holding the SCLx line low, the user application has time to service the ISR and read the contents of the I2CxRCV before the master device can initiate another receive sequence. This prevents buffer overruns.

17.10 Software Controlled Clock Stretching (STREN = 1)

When the STREN bit is '1', the software can clear the SCLREL bit to allow software to control the clock stretching.

If the STREN bit is '0', a software write to the SCLREL bit is disregarded and has no effect on the SCLREL bit.

查询"DSPIC33FJ12MC02ESP"供应商

17.11 Slope Control

The I^2C standard requires slope control on the SDAx and SCLx signals for Fast mode (400 kHz). The control bit, DISSLW, enables the user application to disable slew rate control if desired. It is necessary to disable the slew rate control for 1 MHz mode.

17.12 Clock Arbitration

Clock arbitration occurs when the master deasserts the SCLx pin (SCLx allowed to float high) during any receive, transmit or Restart/Stop condition. When the SCLx pin is allowed to float high, the Baud Rate Generator (BRG) is suspended from counting until the SCLx pin is actually sampled high. When the SCLx pin is sampled high, the BRG is reloaded with the contents of I2CxBRG and begins counting. This process ensures that the SCLx high time will always be at least one BRG rollover count in the event that the clock is held low by an external device.

17.13 Multi-Master Communication, Bus Collision and Bus Arbitration

Multi-Master mode support is achieved by bus arbitration. When the master outputs address/data bits onto the SDAx pin, arbitration takes place when the master outputs a '1' on SDAx by letting SDAx float high while another master asserts a '0'. When the SCLx pin floats high, data should be stable. If the expected data on SDAx is a '1' and the data sampled on the SDAx pin = 0, then a bus collision has taken place. The master sets the I^2C master events interrupt flag and resets the master portion of the I^2C port to its Idle state.

17.14 Peripheral Pin Select Limitations

The I^2C module has limited peripheral pin select functionality. When the ALTI2C bit in the FPOR configuration register is set to '1', I^2C module uses SDAx/SLCx pins. When ALTI2C bit is '0', I^2C module uses ASDAx/ASCLx pins.\

 © 2007 Microchip Technology Inc.

查询"DSPIC33FJ12MC02ESP"供应商

REGISTER 17-1: I2CxCON: I2Cx CONTROL REGISTER

R/W-0	U-0	R/W-0	R/W-1 HC	R/W-0	R/W-0	R/W-0	R/W-0
I2CEN	—	I2CSIDL	SCLREL	IPMIEN	A10M	DISSLW	SMEN
bit 15							bit 8

R/W-0	R/W-0	R/W-0	R/W-0 HC	R/W-0 HC	R/W-0 HC	R/W-0 HC	R/W-0 HC
GCEN	STREN	ACKDT	ACKEN	RCEN	PEN	RSEN	SEN
bit 7							bit 0

Legend:	U = Unimplemented bit, read as ‘0’		
R = Readable bit	W = Writable bit	HS = Set in hardware	HC = Cleared in hardware
-n = Value at POR	‘1’ = Bit is set	‘0’ = Bit is cleared	x = Bit is unknown

bit 15 **I2CEN:** I2Cx Enable bit
1 = Enables the I2Cx module and configures the SDAx and SCLx pins as serial port pins
0 = Disables the I2Cx module. All I^2C pins are controlled by port functions.

bit 14 **Unimplemented:** Read as ‘0’

bit 13 **I2CSIDL:** Stop in Idle Mode bit
1 = Discontinue module operation when device enters an Idle mode
0 = Continue module operation in Idle mode

bit 12 **SCLREL:** SCLx Release Control bit (when operating as I^2C slave)
1 = Release SCLx clock
0 = Hold SCLx clock low (clock stretch)
If STREN = 1:
Bit is R/W (i.e., software can write ‘0’ to initiate stretch and write ‘1’ to release clock). Hardware clear at beginning of slave transmission. Hardware clear at end of slave reception.
If STREN = 0:
Bit is R/S (i.e., software can only write ‘1’ to release clock). Hardware clear at beginning of slave transmission.

bit 11 **IPMIEN:** Intelligent Peripheral Management Interface (IPMI) Enable bit
1 = IPMI mode is enabled; all addresses Acknowledged
0 = IPMI mode disabled

bit 10 **A10M:** 10-bit Slave Address bit
1 = I2CxADD is a 10-bit slave address
0 = I2CxADD is a 7-bit slave address

bit 9 **DISSLW:** Disable Slew Rate Control bit
1 = Slew rate control disabled
0 = Slew rate control enabled

bit 8 **SMEN:** SMbus Input Levels bit
1 = Enable I/O pin thresholds compliant with SMbus specification
0 = Disable SMbus input thresholds

bit 7 **GCEN:** General Call Enable bit (when operating as I^2C slave)
1 = Enable interrupt when a general call address is received in the I2CxRSR (module is enabled for reception)
0 = General call address disabled

bit 6 **STREN:** SCLx Clock Stretch Enable bit (when operating as I^2C slave)
Used in conjunction with SCLREL bit.
1 = Enable software or receive clock stretching
0 = Disable software or receive clock stretching

查询"DSPIC33FJ12MC02ESP"供应商

REGISTER 17-1: I2CxCON: I2Cx CONTROL REGISTER (CONTINUED)

bit 5 **ACKDT:** Acknowledge Data bit (when operating as I^2C master, applicable during master receive)
Value that will be transmitted when the software initiates an Acknowledge sequence.
1 = Send NACK during Acknowledge
0 = Send ACK during Acknowledge

bit 4 **ACKEN:** Acknowledge Sequence Enable bit
(when operating as I^2C master, applicable during master receive)
1 = Initiate Acknowledge sequence on SDAx and SCLx pins and transmit ACKDT data bit. Hardware clear at end of master Acknowledge sequence.
0 = Acknowledge sequence not in progress

bit 3 **RCEN:** Receive Enable bit (when operating as I^2C master)
1 = Enables Receive mode for I^2C. Hardware clear at end of eighth bit of master receive data byte.
0 = Receive sequence not in progress

bit 2 **PEN:** Stop Condition Enable bit (when operating as I^2C master)
1 = Initiate Stop condition on SDAx and SCLx pins. Hardware clear at end of master Stop sequence.
0 = Stop condition not in progress

bit 1 **RSEN:** Repeated Start Condition Enable bit (when operating as I^2C master)
1 = Initiate Repeated Start condition on SDAx and SCLx pins. Hardware clear at end of master Repeated Start sequence.
0 = Repeated Start condition not in progress

bit 0 **SEN:** Start Condition Enable bit (when operating as I^2C master)
1 = Initiate Start condition on SDAx and SCLx pins. Hardware clear at end of master Start sequence.
0 = Start condition not in progress

 © 2007 Microchip Technology Inc.

查询"DSPIC33FJ12MC02ESP"供应商

REGISTER 17-2: I2CxSTAT: I2Cx STATUS REGISTER

R-0 HSC	R-0 HSC	U-0	U-0	U-0	R/C-0 HS	R-0 HSC	R-0 HSC
ACKSTAT	TRSTAT	—	—	—	BCL	GCSTAT	ADD10
bit 15							bit 8

R/C-0 HS	R/C-0 HS	R-0 HSC	R/C-0 HSC	R/C-0 HSC	R-0 HSC	R-0 HSC	R-0 HSC
IWCOL	I2COV	D_A	P	S	R_W	RBF	TBF
bit 7							bit 0

Legend:	U = Unimplemented bit, read as ‘0’		
R = Readable bit	W = Writable bit	HS = Set in hardware	HSC = Hardware set/cleared
-n = Value at POR	‘1’ = Bit is set	‘0’ = Bit is cleared	x = Bit is unknown

bit 15 **ACKSTAT:** Acknowledge Status bit
(when operating as I^2C master, applicable to master transmit operation)
1 = NACK received from slave
0 = ACK received from slave
Hardware set or clear at end of slave Acknowledge.

bit 14 **TRSTAT:** Transmit Status bit (when operating as I^2C master, applicable to master transmit operation)
1 = Master transmit is in progress (8 bits + ACK)
0 = Master transmit is not in progress
Hardware set at beginning of master transmission. Hardware clear at end of slave Acknowledge.

bit 13-11 **Unimplemented:** Read as ‘0’

bit 10 **BCL:** Master Bus Collision Detect bit
1 = A bus collision has been detected during a master operation
0 = No collision
Hardware set at detection of bus collision.

bit 9 **GCSTAT:** General Call Status bit
1 = General call address was received
0 = General call address was not received
Hardware set when address matches general call address. Hardware clear at Stop detection.

bit 8 **ADD10:** 10-bit Address Status bit
1 = 10-bit address was matched
0 = 10-bit address was not matched
Hardware set at match of 2nd byte of matched 10-bit address. Hardware clear at Stop detection.

bit 7 **IWCOL:** Write Collision Detect bit
1 = An attempt to write the I2CxTRN register failed because the I^2C module is busy
0 = No collision
Hardware set at occurrence of write to I2CxTRN while busy (cleared by software).

bit 6 **I2COV:** Receive Overflow Flag bit
1 = A byte was received while the I2CxRCV register is still holding the previous byte
0 = No overflow
Hardware set at attempt to transfer I2CxRSR to I2CxRCV (cleared by software).

bit 5 **D_A:** Data/Address bit (when operating as I^2C slave)
1 = Indicates that the last byte received was data
0 = Indicates that the last byte received was device address
Hardware clear at device address match. Hardware set by reception of slave byte.

bit 4 **P:** Stop bit
1 = Indicates that a Stop bit has been detected last
0 = Stop bit was not detected last
Hardware set or clear when Start, Repeated Start or Stop detected.

查询"DSPIC33FJ12MC02ESP"供应商

REGISTER 17-2: I2CxSTAT: I2Cx STATUS REGISTER (CONTINUED)

bit 3 **S:** Start bit
1 = Indicates that a Start (or Repeated Start) bit has been detected last
0 = Start bit was not detected last
Hardware set or clear when Start, Repeated Start or Stop detected.

bit 2 **R_W:** Read/Write Information bit (when operating as I^2C slave)
1 = Read – indicates data transfer is output from slave
0 = Write – indicates data transfer is input to slave
Hardware set or clear after reception of I^2C device address byte.

bit 1 **RBF:** Receive Buffer Full Status bit
1 = Receive complete, I2CxRCV is full
0 = Receive not complete, I2CxRCV is empty
Hardware set when I2CxRCV is written with received byte. Hardware clear when software reads I2CxRCV.

bit 0 **TBF:** Transmit Buffer Full Status bit
1 = Transmit in progress, I2CxTRN is full
0 = Transmit complete, I2CxTRN is empty
Hardware set when software writes I2CxTRN. Hardware clear at completion of data transmission.

 © 2007 Microchip Technology Inc.

查询"DSPIC33FJ12MC02ESP"供应商

REGISTER 17-3: I2CxMSK: I2Cx SLAVE MODE ADDRESS MASK REGISTER

U-0	U-0	U-0	U-0	U-0	U-0	R/W-0	R/W-0
—	—	—	—	—	—	AMSK9	AMSK8
bit 15							bit 8

R/W-0	R/W-0	R/W-0	R/W-0	R/W-0	R/W-0	R/W-0	R/W-0
AMSK7	AMSK6	AMSK5	AMSK4	AMSK3	AMSK2	AMSK1	AMSK0
bit 7							bit 0

Legend:			
R = Readable bit	W = Writable bit	U = Unimplemented bit, read as ‘0’	
-n = Value at POR	‘1’ = Bit is set	‘0’ = Bit is cleared	x = Bit is unknown

bit 15-10 **Unimplemented:** Read as ‘0’

bit 9-0 **AMSKx:** Mask for Address bit x Select bit

1 = Enable masking for bit x of incoming message address; bit match not required in this position

0 = Disable masking for bit x; bit match required in this position

查询"DSPIC33FJ12MC02ESP"供应商

NOTES:

 © 2007 Microchip Technology Inc.

查询"DSPIC33FJ12MC02ESP"供应商

18.0 UNIVERSAL ASYNCHRONOUS RECEIVER TRANSMITTER (UART)

Note: This data sheet summarizes the features of the dsPIC33FJ12MC201/202 devices. It is not intended to be a comprehensive reference source. To complement the information in this data sheet, refer to the *"dsPIC33F Family Reference Manual"*. Please see the Microchip web site (www.microchip.com) for the latest dsPIC33F Family Reference Manual chapters.

The Universal Asynchronous Receiver Transmitter (UART) module is one of the serial I/O modules available in the dsPIC33FJ12MC201/202 device family. The UART is a full-duplex asynchronous system that can communicate with peripheral devices, such as personal computers, LIN, RS-232 and RS-485 interfaces. The module also supports a hardware flow control option with the $\overline{\text{UxCTS}}$ and $\overline{\text{UxRTS}}$ pins and also includes an IrDA® encoder and decoder.

The primary features of the UART module are:

- Full-Duplex, 8- or 9-bit Data Transmission through the UxTX and UxRX pins
- Even, Odd or No Parity Options (for 8-bit data)
- One or two stop bits
- Hardware flow control option with $\overline{\text{UxCTS}}$ and $\overline{\text{UxRTS}}$ pins
- Fully integrated Baud Rate Generator with 16-bit prescaler
- Baud rates ranging from 1 Mbps to 15 Mbps at 16 MIPS
- 4-deep First-In First-Out (FIFO) Transmit Data buffer
- 4-deep FIFO Receive Data buffer
- Parity, framing and buffer overrun error detection
- Support for 9-bit mode with Address Detect (9th bit = 1)
- Transmit and Receive interrupts
- A separate interrupt for all UART error conditions
- Loopback mode for diagnostic support
- Support for sync and break characters
- Support for automatic baud rate detection
- IrDA encoder and decoder logic
- 16x baud clock output for IrDA support

A simplified block diagram of the UART module is shown in Figure 18-1. The UART module consists of these key hardware elements:

- Baud Rate Generator
- Asynchronous Transmitter
- Asynchronous Receiver

FIGURE 18-1: UART SIMPLIFIED BLOCK DIAGRAM

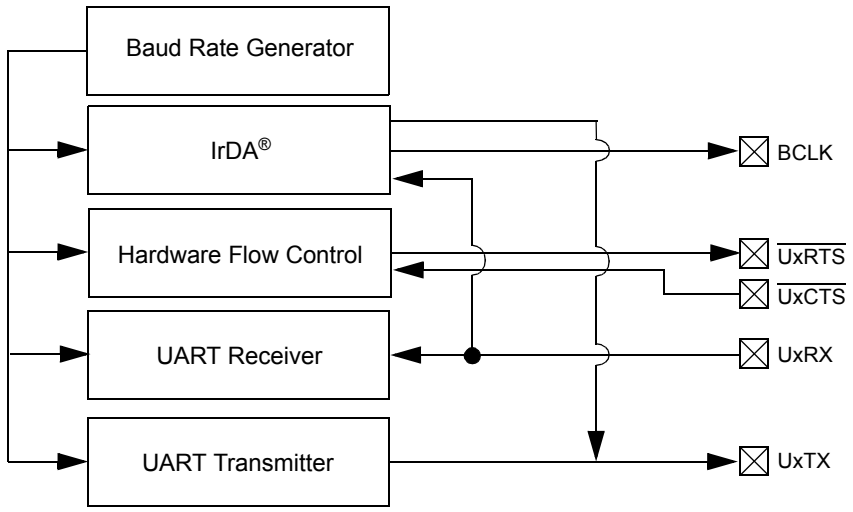

查询"DSPIC33FJ12MC02ESP"供应商

18.1 UART Baud Rate Generator (BRG)

The UART module includes a dedicated 16-bit Baud Rate Generator (BRG). The BRGx register controls the period of a free-running 16-bit timer. Equation 18-1 shows the formula for computation of the baud rate with BRGH = 0.

EQUATION 18-1: UART BAUD RATE WITH BRGH = 0

$$\text{Baud Rate} = \frac{F_{CY}}{16 \cdot (BRGx + 1)}$$

$$BRGx = \frac{F_{CY}}{16 \cdot \text{Baud Rate}} - 1$$

Note: F_{CY} denotes the instruction cycle clock frequency ($F_{OSC}/2$).

Example 18-1 shows the calculation of the baud rate error for the following conditions:

- F_{CY} = 4 MHz
- Desired Baud Rate = 9600

The maximum baud rate (BRGH = 0) possible is $F_{CY}/16$ (for BRGx = 0), and the minimum baud rate possible is $F_{CY}/(16 * 65536)$.

Equation 18-2 shows the formula for computation of the baud rate with BRGH = 1.

EQUATION 18-2: UART BAUD RATE WITH BRGH = 1

$$\text{Baud Rate} = \frac{F_{CY}}{4 \cdot (BRGx + 1)}$$

$$BRGx = \frac{F_{CY}}{4 \cdot \text{Baud Rate}} - 1$$

Note: F_{CY} denotes the instruction cycle clock frequency ($F_{OSC}/2$).

The maximum baud rate (BRGH = 1) possible is $F_{CY}/4$ (for BRGx = 0), and the minimum baud rate possible is $F_{CY}/(4 * 65536)$.

Writing a new value to the BRGx register causes the BRG timer to be reset (cleared). This ensures the BRG does not wait for a timer overflow before generating the new baud rate.

EXAMPLE 18-1: BAUD RATE ERROR CALCULATION (BRGH = 0)

Desired Baud Rate = $F_{CY}/(16\ (BRGx + 1))$

Solving for BRGx Value:

BRGx = $((F_{CY}/\text{Desired Baud Rate})/16) - 1$
BRGx = $((4000000/9600)/16) - 1$
BRGx = 25

Calculated Baud Rate = 4000000/(16 (25 + 1))
= 9615

Error = (Calculated Baud Rate – Desired Baud Rate) / Desired Baud Rate
= (9615 – 9600)/9600
= 0.16%

 © 2007 Microchip Technology Inc.

查询"DSPIC33FJ12MC02ESP"供应商

18.2 Transmitting in 8-bit Data Mode

1. Set up the UART:
   a) Write appropriate values for data, parity and Stop bits.
   b) Write appropriate baud rate value to the BRGx register.
   c) Set up transmit and receive interrupt enable and priority bits.
2. Enable the UART.
3. Set the UTXEN bit (causes a transmit interrupt).
4. Write data byte to lower byte of UxTXREG word. The value will be immediately transferred to the Transmit Shift Register (TSR) and the serial bit stream will start shifting out with the next rising edge of the baud clock.

   Alternately, the data byte can be transferred while UTXEN = 0, and then the user application can set UTXEN. This causes the serial bit stream to begin immediately, because the baud clock starts from a cleared state.

A transmit interrupt will be generated as per the interrupt control bits, UTXISEL<1:0>.

18.3 Transmitting in 9-bit Data Mode

1. Set up the UART (as described in **Section 18.2 "Transmitting in 8-bit Data Mode"**).
2. Enable the UART.
3. Set the UTXEN bit (causes a transmit interrupt).
4. Write UxTXREG as a 16-bit value only.
5. A word write to UxTXREG triggers the transfer of the 9-bit data to the TSR. The serial bit stream will start shifting out with the first rising edge of the baud clock.

A transmit interrupt will be generated as per the setting of control bits, UTXISEL<1:0>.

18.4 Break and Sync Transmit Sequence

The following sequence will send a message frame header made up of a Break, followed by an auto-baud Sync byte.

1. Configure the UART for the desired mode.
2. Set UTXEN and UTXBRK, which sets up the Break character.
3. Load the UxTXREG register with a dummy character to initiate transmission (value is ignored).
4. Write 0x55 to UxTXREG, which loads the Sync character into the transmit FIFO. After the Break has been sent, the UTXBRK bit is reset by hardware.

The Sync character now transmits.

18.5 Receiving in 8-bit or 9-bit Data Mode

1. Set up the UART (as described in **Section 18.2 "Transmitting in 8-bit Data Mode"**).
2. Enable the UART.

   A receive interrupt will be generated when one or more data characters have been received as per interrupt control bits, URXISEL<1:0>.
3. Read the OERR bit to determine if an overrun error has occurred. The OERR bit must be reset in software.
4. Read UxRXREG.

The act of reading the UxRXREG character will move the next character to the top of the receive FIFO, including a new set of PERR and FERR values.

18.6 Flow Control Using $\overline{\text{UxCTS}}$ and UxRTS Pins

UARTx Clear to Send ($\overline{\text{UxCTS}}$) and Request to Send ($\overline{\text{UxRTS}}$) are the two hardware controlled active-low pins associated with the UART module. The UEN<1:0> bits in the UxMODE register configures these pins.

These two pins allow the UART to operate in Simplex and Flow Control modes. They are implemented to control the transmission and the reception between the Data Terminal Equipment (DTE).

18.7 Infrared Support

The UART module provides two types of infrared UART support:

- IrDA clock output to support external IrDA encoder and decoder device (legacy module support)
- Full implementation of the IrDA encoder and decoder.

18.7.1 EXTERNAL IrDA SUPPORT – IrDA CLOCK OUTPUT

To support external IrDA encoder and decoder devices, the BCLK pin (same as the $\overline{\text{UxRTS}}$ pin) can be configured to generate the 16x baud clock. With UEN<1:0> = 11, the BCLK pin will output the 16x baud clock if the UART module is enabled. The pin can be used to support the IrDA codec chip.

18.7.2 BUILT-IN IrDA ENCODER AND DECODER

The UART module includes full implementation of the IrDA encoder and decoder. The built-in IrDA encoder and decoder functionality is enabled using the IREN bit (UxMODE<12>). When enabled (IREN = 1), the receive pin (UxRX) acts as the input from the infrared receiver. The transmit pin (UxTX) acts as the output to the infrared transmitter.

查询"DSPIC33FJ12MC02ESP"供应商

REGISTER 18-1: UxMODE: UARTx MODE REGISTER

R/W-0	U-0	R/W-0	R/W-0	R/W-0	U-0	R/W-0	R/W-0
UARTEN	—	USIDL	IREN(1)	RTSMD	—	UEN<1:0>	
bit 15							bit 8

R/W-0 HC	R/W-0	R/W-0 HC	R/W-0	R/W-0	R/W-0	R/W-0	R/W-0
WAKE	LPBACK	ABAUD	URXINV	BRGH	PDSEL<1:0>		STSEL
bit 7							bit 0

Legend:	HC = Hardware cleared		
R = Readable bit	W = Writable bit	U = Unimplemented bit, read as ‘0’	
-n = Value at POR	‘1’ = Bit is set	‘0’ = Bit is cleared	x = Bit is unknown

bit 15 **UARTEN:** UARTx Enable bit
- 1 = UARTx is enabled; all UARTx pins are controlled by UARTx as defined by UEN<1:0>
- 0 = UARTx is disabled; all UARTx pins are controlled by port latches; UARTx power consumption minimal

bit 14 **Unimplemented:** Read as ‘0’

bit 13 **USIDL:** Stop in Idle Mode bit
- 1 = Discontinue module operation when device enters Idle mode
- 0 = Continue module operation in Idle mode

bit 12 **IREN:** IrDA Encoder and Decoder Enable bit(1)
- 1 = IrDA encoder and decoder enabled
- 0 = IrDA encoder and decoder disabled

bit 11 **RTSMD:** Mode Selection for $\overline{\text{UxRTS}}$ Pin bit
- 1 = $\overline{\text{UxRTS}}$ pin in Simplex mode
- 0 = $\overline{\text{UxRTS}}$ pin in Flow Control mode

bit 10 **Unimplemented:** Read as ‘0’

bit 9-8 **UEN<1:0>:** UARTx Enable bits
- 11 = UxTX, UxRX and BCLK pins are enabled and used; $\overline{\text{UxCTS}}$ pin controlled by port latches
- 10 = UxTX, UxRX, $\overline{\text{UxCTS}}$ and $\overline{\text{UxRTS}}$ pins are enabled and used
- 01 = UxTX, UxRX and $\overline{\text{UxRTS}}$ pins are enabled and used; $\overline{\text{UxCTS}}$ pin controlled by port latches
- 00 = UxTX and UxRX pins are enabled and used; $\overline{\text{UxCTS}}$ and $\overline{\text{UxRTS}}$/BCLK pins controlled by port latches

bit 7 **WAKE:** Wake-up on Start bit Detect During Sleep Mode Enable bit
- 1 = UARTx will continue to sample the UxRX pin; interrupt generated on falling edge; bit cleared in hardware on following rising edge
- 0 = No wake-up enabled

bit 6 **LPBACK:** UARTx Loopback Mode Select bit
- 1 = Enable Loopback mode
- 0 = Loopback mode is disabled

bit 5 **ABAUD:** Auto-Baud Enable bit
- 1 = Enable baud rate measurement on the next character – requires reception of a Sync field (55h) before other data; cleared in hardware upon completion
- 0 = Baud rate measurement disabled or completed

bit 4 **URXINV:** Receive Polarity Inversion bit
- 1 = UxRX Idle state is ‘0’
- 0 = UxRX Idle state is ‘1’

Note 1: This feature is only available for the 16x BRG mode (BRGH = 0).

 © 2007 Microchip Technology Inc.

查询"DSPIC33FJ12MC02ESP"供应商

REGISTER 18-1: UxMODE: UARTx MODE REGISTER (CONTINUED)

bit 3 **BRGH:** High Baud Rate Enable bit
1 = BRG generates 4 clocks per bit period (4x baud clock, High-Speed mode)
0 = BRG generates 16 clocks per bit period (16x baud clock, Standard mode)

bit 2-1 **PDSEL<1:0>:** Parity and Data Selection bits
11 = 9-bit data, no parity
10 = 8-bit data, odd parity
01 = 8-bit data, even parity
00 = 8-bit data, no parity

bit 0 **STSEL:** Stop Bit Selection bit
1 = Two Stop bits
0 = One Stop bit

Note 1: This feature is only available for the 16x BRG mode (BRGH = 0).

查询"DSPIC33FJ12MC02ESP"供应商

REGISTER 18-2: UxSTA: UARTx STATUS AND CONTROL REGISTER

R/W-0	R/W-0	R/W-0	U-0	R/W-0 HC	R/W-0	R-0	R-1
UTXISEL1	UTXINV(1)	UTXISEL0	—	UTXBRK	UTXEN	UTXBF	TRMT
bit 15							bit 8

R/W-0	R/W-0	R/W-0	R-1	R-0	R-0	R/C-0	R-0
URXISEL<1:0>		ADDEN	RIDLE	PERR	FERR	OERR	URXDA
bit 7							bit 0

Legend:	HC = Hardware cleared		
R = Readable bit	W = Writable bit	U = Unimplemented bit, read as ‘0’	
-n = Value at POR	‘1’ = Bit is set	‘0’ = Bit is cleared	x = Bit is unknown

bit 15,13 **UTXISEL<1:0>:** Transmission Interrupt Mode Selection bits
- 11 = Reserved; do not use
- 10 = Interrupt when a character is transferred to the Transmit Shift Register, and as a result, the transmit buffer becomes empty
- 01 = Interrupt when the last character is shifted out of the Transmit Shift Register; all transmit operations are completed
- 00 = Interrupt when a character is transferred to the Transmit Shift Register (this implies there is at least one character open in the transmit buffer)

bit 14 **UTXINV:** IrDA® Encoder Transmit Polarity Inversion bit(1)
- 1 = IrDA encoded, UxTX Idle state is ‘1’
- 0 = IrDA encoded, UxTX Idle state is ‘0’

bit 12 **Unimplemented:** Read as ‘0’

bit 11 **UTXBRK:** Transmit Break bit
- 1 = Send Sync Break on next transmission – Start bit, followed by twelve ‘0’ bits, followed by Stop bit; cleared by hardware upon completion
- 0 = Sync Break transmission disabled or completed

bit 10 **UTXEN:** Transmit Enable bit
- 1 = Transmit enabled, UxTX pin controlled by UARTx
- 0 = Transmit disabled, any pending transmission is aborted and buffer is reset. UxTX pin controlled by port.

bit 9 **UTXBF:** Transmit Buffer Full Status bit (read-only)
- 1 = Transmit buffer is full
- 0 = Transmit buffer is not full, at least one more character can be written

bit 8 **TRMT:** Transmit Shift Register Empty bit (read-only)
- 1 = Transmit Shift Register is empty and transmit buffer is empty (the last transmission has completed)
- 0 = Transmit Shift Register is not empty, a transmission is in progress or queued

bit 7-6 **URXISEL<1:0>:** Receive Interrupt Mode Selection bits
- 11 = Interrupt is set on UxRSR transfer making the receive buffer full (i.e., has 4 data characters)
- 10 = Interrupt is set on UxRSR transfer making the receive buffer 3/4 full (i.e., has 3 data characters)
- 0x = Interrupt is set when any character is received and transferred from the UxRSR to the receive buffer. Receive buffer has one or more characters.

bit 5 **ADDEN:** Address Character Detect bit (bit 8 of received data = 1)
- 1 = Address Detect mode enabled. If 9-bit mode is not selected, this does not take effect.
- 0 = Address Detect mode disabled

Note 1: Value of bit only affects the transmit properties of the module when the IrDA encoder is enabled (IREN = 1).

 © 2007 Microchip Technology Inc.

查询"DSPIC33FJ12MC02ESP"供应商

REGISTER 18-2: UxSTA: UARTx STATUS AND CONTROL REGISTER (CONTINUED)

bit 4 **RIDLE:** Receiver Idle bit (read-only)
1 = Receiver is Idle
0 = Receiver is active

bit 3 **PERR:** Parity Error Status bit (read-only)
1 = Parity error has been detected for the current character (character at the top of the receive FIFO)
0 = Parity error has not been detected

bit 2 **FERR:** Framing Error Status bit (read-only)
1 = Framing error has been detected for the current character (character at the top of the receive FIFO)
0 = Framing error has not been detected

bit 1 **OERR:** Receive Buffer Overrun Error Status bit (read/clear only)
1 = Receive buffer has overflowed
0 = Receive buffer has not overflowed. Clearing a previously set OERR bit (1 → 0 transition) will reset the receiver buffer and the UxRSR to the empty state.

bit 0 **URXDA:** Receive Buffer Data Available bit (read-only)
1 = Receive buffer has data, at least one more character can be read
0 = Receive buffer is empty

Note 1: Value of bit only affects the transmit properties of the module when the IrDA encoder is enabled (IREN = 1).

查询"DSPIC33FJ12MC02ESP"供应商

NOTES:

 © 2007 Microchip Technology Inc.

查询"DSPIC33FJ12MC02ESP"供应商

19.0 10-BIT/12-BIT ANALOG-TO-DIGITAL CONVERTER (ADC)

Note:	This data sheet summarizes the features of the dsPIC33FJ12MC201/202 devices. It is not intended to be a comprehensive reference source. To complement the information in this data sheet, refer to the *"dsPIC33F Family Reference Manual"*. Please see the Microchip web site (www.microchip.com) for the latest dsPIC33F Family Reference Manual chapters.

The dsPIC33FJ12MC201/202 devices have up to 6 ADC module input channels.

The AD12B bit (ADxCON1<10>) allows each of the ADC modules to be configured as either a 10-bit, 4-sample-and-hold ADC (default configuration) or a 12-bit, 1 sample-and-hold ADC.

Note:	The ADC module must be disabled before the AD12B bit can be modified.

19.1 Key Features

The 10-bit ADC configuration has the following key features:

- Successive Approximation (SAR) conversion
- Conversion speeds of up to 1.1 Msps
- Up to 6 analog input pins
- External voltage reference input pins
- Simultaneous sampling of up to four analog input pins
- Automatic Channel Scan mode
- Selectable conversion trigger source
- Selectable Buffer Fill modes
- Four result alignment options (signed/unsigned, fractional/integer)
- Operation during CPU Sleep and Idle modes
- 16-word conversion result buffer

The 12-bit ADC configuration supports all the above features, except:

- In the 12-bit configuration, conversion speeds of up to 500 ksps are supported
- There is only 1 sample-and-hold amplifier in the 12-bit configuration, so simultaneous sampling of multiple channels is not supported.

Depending on the particular device pinout, the ADC can have up to 6 analog input pins, designated AN0 through AN5. In addition, there are two analog input pins for external voltage reference connections. These voltage reference inputs can be shared with other analog input pins.

The actual number of analog input pins and external voltage reference input configuration will depend on the specific device.

A block diagram of the ADC is shown in Figure 19-1.

19.2 ADC Initialization

To configure the ADC module:

1. Select port pins as analog inputs (ADxPCFGH<15:0> or ADxPCFGL<15:0>).
2. Select voltage reference source to match expected range on analog inputs (ADxCON2<15:13>).
3. Select the analog conversion clock to match the desired data rate with the processor clock (ADxCON3<5:0>).
4. Determine how many sample-and-hold channels will be used (ADxCON2<9:8> and ADxPCFGH<15:0> or ADxPCFGL<15:0>).
5. Select the appropriate sample/conversion sequence (ADxCON1<7:5> and ADxCON3<12:8>).
6. Select the way conversion results are presented in the buffer (ADxCON1<9:8>).
7. Turn on the ADC module (ADxCON1<15>).
8. Configure ADC interrupt (if required):
   a) Clear the ADxIF bit.
   b) Select the ADC interrupt priority.

查询"DSPIC33FJ12MC02ESP"供应商

FIGURE 19-1: ADC1 MODULE BLOCK DIAGRAM

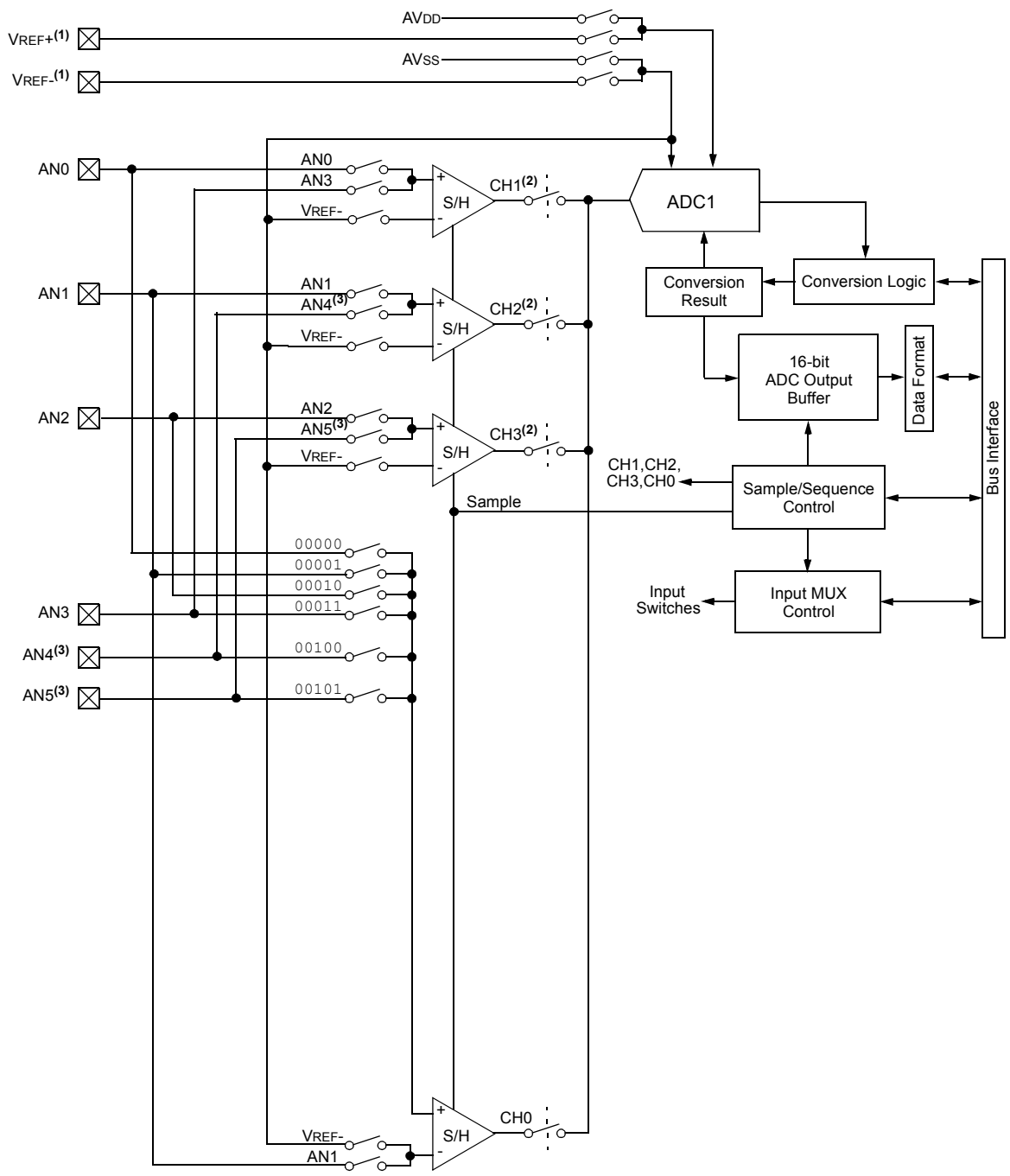

Note 1: VREF+, VREF- inputs can be multiplexed with other analog inputs.

2: Channels 1, 2 and 3 are not applicable for the 12-bit mode of operation.

3: AN4 and AN5 are not applicable to dsPIC33FJ12MC201 devices.

 © 2007 Microchip Technology Inc.

查询"DSPIC33FJ12MC02ESP"供应商

EQUATION 19-1: ADC CONVERSION CLOCK PERIOD

$$T_{AD} = T_{CY}(ADCS + 1)$$

$$ADCS = \frac{T_{AD}}{T_{CY}} - 1$$

FIGURE 19-2: ADC TRANSFER FUNCTION (10-BIT EXAMPLE)

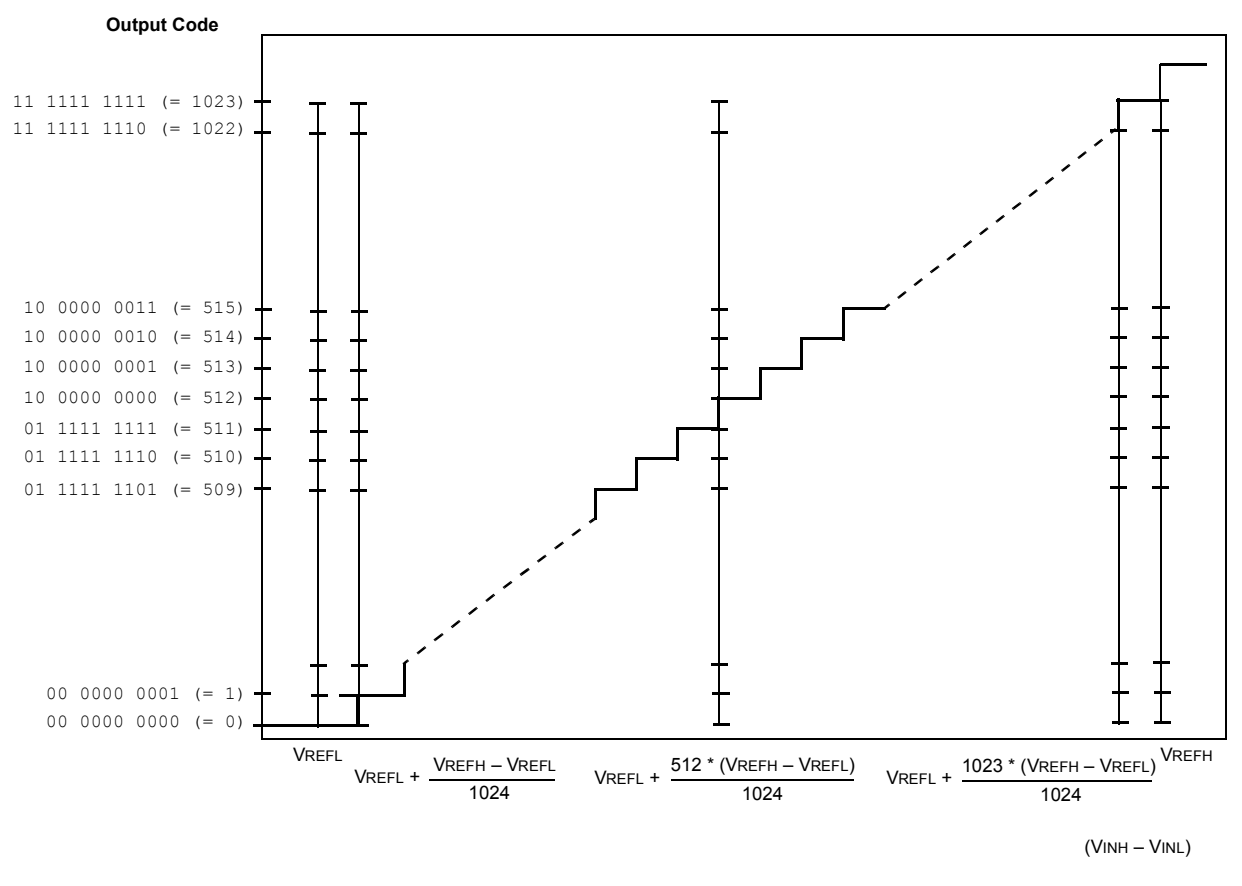

FIGURE 19-3: ADC CONVERSION CLOCK PERIOD BLOCK DIAGRAM

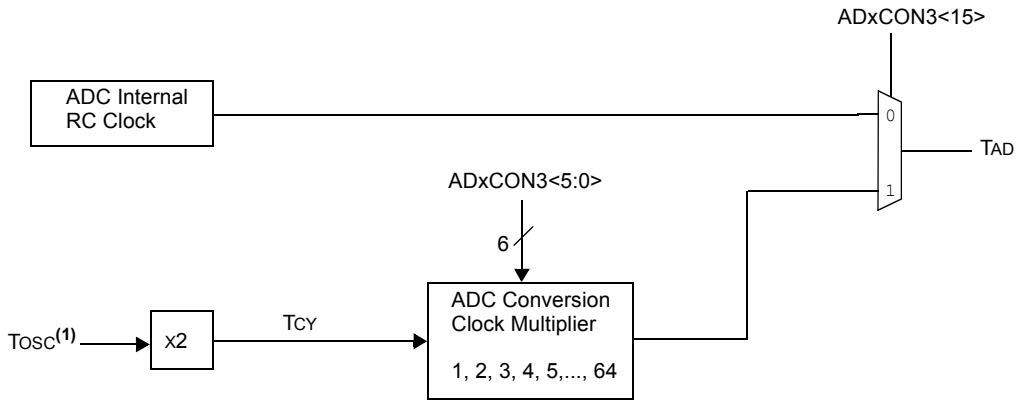

Note: Refer to Figure 7-2 for the derivation of FOSC when the PLL is enabled. If the PLL is not used, FOSC is equal to the clock frequency. TOSC = 1/FOSC.

查询"DSPIC33FJ12MC02ESP"供应商

REGISTER 19-1: AD1CON1: ADC1 CONTROL REGISTER 1

R/W-0	U-0	R/W-0	U-0	U-0	R/W-0	R/W-0	R/W-0
ADON	—	ADSIDL	—	—	AD12B	FORM<1:0>	
bit 15							bit 8

R/W-0	R/W-0	R/W-0	U-0	R/W-0	R/W-0	R/W-0 HC,HS	R/C-0 HC, HS
SSRC<2:0>			—	SIMSAM	ASAM	SAMP	DONE
bit 7							bit 0

Legend:	HC = Cleared by hardware	HS = Set by hardware	
R = Readable bit	W = Writable bit	U = Unimplemented bit, read as ‘0’	
-n = Value at POR	‘1’ = Bit is set	‘0’ = Bit is cleared	x = Bit is unknown

bit 15 **ADON:** ADC Operating Mode bit
1 = ADC module is operating
0 = ADC is off

bit 14 **Unimplemented:** Read as ‘0’

bit 13 **ADSIDL:** Stop in Idle Mode bit
1 = Discontinue module operation when device enters Idle mode
0 = Continue module operation in Idle mode

bit 12-11 **Unimplemented:** Read as ‘0’

bit 10 **AD12B:** 10-bit or 12-bit Operation Mode bit
1 = 12-bit, 1-channel ADC operation
0 = 10-bit, 4-channel ADC operation

bit 9-8 **FORM<1:0>:** Data Output Format bits
For 10-bit operation:
11 = Signed fractional (DOUT = sddd dddd dd00 0000, where s = .NOT.d<9>)
10 = Fractional (DOUT = dddd dddd dd00 0000)
01 = Signed integer (DOUT = ssss sssd dddd dddd, where s = .NOT.d<9>)
00 = Integer (DOUT = 0000 00dd dddd dddd)
For 12-bit operation:
11 = Signed fractional (DOUT = sddd dddd dddd 0000, where s = .NOT.d<11>)
10 = Fractional (DOUT = dddd dddd dddd 0000)
01 = Signed Integer (DOUT = ssss sddd dddd dddd, where s = .NOT.d<11>)
00 = Integer (DOUT = 0000 dddd dddd dddd)

bit 7-5 **SSRC<2:0>:** Sample Clock Source Select bits
111 = Internal counter ends sampling and starts conversion (auto-convert)
110 = Reserved
101 = Motor Control PWM2 interval ends sampling and starts conversion
100 = Reserved
011 = Motor Control PWM1 interval ends sampling and starts conversion
010 = GP timer 3 compare ends sampling and starts conversion
001 = Active transition on INT0 pin ends sampling and starts conversion
000 = Clearing sample bit ends sampling and starts conversion

bit 4 **Unimplemented:** Read as ‘0’

bit 3 **SIMSAM:** Simultaneous Sample Select bit (applicable only when CHPS<1:0> = 01 or 1x)
When AD12B = 1, SIMSAM is: U-0, Unimplemented, Read as ‘0’
1 = Samples CH0, CH1, CH2, CH3 simultaneously (when CHPS<1:0> = 1x); or
Samples CH0 and CH1 simultaneously (when CHPS<1:0> = 01)
0 = Samples multiple channels individually in sequence

 © 2007 Microchip Technology Inc.

查询"DSPIC33FJ12MC02ESP"供应商

REGISTER 19-1: AD1CON1: ADC1 CONTROL REGISTER 1 (CONTINUED)

bit 2 **ASAM:** ADC Sample Auto-Start bit

1 = Sampling begins immediately after last conversion. SAMP bit is auto-set.
0 = Sampling begins when SAMP bit is set

bit 1 **SAMP:** ADC Sample Enable bit

1 = ADC sample-and-hold amplifiers are sampling
0 = ADC sample-and-hold amplifiers are holding
If ASAM = 0, software can write '1' to begin sampling. Automatically set by hardware if ASAM = 1.
If SSRC = 000, software can write '0' to end sampling and start conversion. If SSRC ≠ 000, automatically cleared by hardware to end sampling and start conversion.

bit 0 **DONE:** ADC Conversion Status bit

1 = ADC conversion cycle is completed
0 = ADC conversion not started or in progress
Automatically set by hardware when ADC conversion is complete. Software can write '0' to clear DONE status (software not allowed to write '1'). Clearing this bit will NOT affect any operation in progress. Automatically cleared by hardware at start of a new conversion.

查询"DSPIC33FJ12MC02ESP"供应商

REGISTER 19-2: AD1CON2: ADC1 CONTROL REGISTER 2

R/W-0	R/W-0	R/W-0	U-0	U-0	R/W-0	R/W-0	R/W-0
VCFG<2:0>			—	—	CSCNA	CHPS<1:0>	
bit 15							bit 8

R-0	U-0	R/W-0	R/W-0	R/W-0	R/W-0	R/W-0	R/W-0
BUFS	—	SMPI<3:0>				BUFM	ALTS
bit 7							bit 0

Legend:			
R = Readable bit	W = Writable bit	U = Unimplemented bit, read as ‘0’	
-n = Value at POR	‘1’ = Bit is set	‘0’ = Bit is cleared	x = Bit is unknown

bit 15-13 **VCFG<2:0>:** Converter Voltage Reference Configuration bits

	ADREF+	ADREF-
000	AVDD	AVSS
001	External VREF+	AVSS
010	AVDD	External VREF-
011	External VREF+	External VREF-
1xx	AVDD	AVSS

bit 12-11 **Unimplemented:** Read as ‘0’

bit 10 **CSCNA:** Scan Input Selections for CH0+ during Sample A bit
1 = Scan inputs
0 = Do not scan inputs

bit 9-8 **CHPS<1:0>:** Select Channels Utilized bits
When AD12B = 1, CHPS<1:0> is: U-0, Unimplemented, Read as ‘0’
1x = Converts CH0, CH1, CH2 and CH3
01 = Converts CH0 and CH1
00 = Converts CH0

bit 7 **BUFS:** Buffer Fill Status bit (valid only when BUFM = 1)
1 = ADC is currently filling second half of buffer, user should access data in the first half
0 = ADC is currently filling first half of buffer, user application should access data in the second half

bit 6 **Unimplemented:** Read as ‘0’

bit 5-2 **SMPI<3:0>:** Sample/Convert Sequences Per Interrupt Selection bits
1111 = Interrupts at the completion of conversion for each 16th sample/convert sequence
1110 = Interrupts at the completion of conversion for each 15th sample/convert sequence
•
•
•
0001 = Interrupts at the completion of conversion for each 2nd sample/convert sequence
0000 = Interrupts at the completion of conversion for each sample/convert sequence

bit 1 **BUFM:** Buffer Fill Mode Select bit
1 = Starts filling first half of buffer on first interrupt and the second half of buffer on next interrupt
0 = Always starts filling buffer from the beginning

bit 0 **ALTS:** Alternate Input Sample Mode Select bit
1 = Uses channel input selects for Sample A on first sample and Sample B on next sample
0 = Always uses channel input selects for Sample A

 © 2007 Microchip Technology Inc.

查询"DSPIC33FJ12MC02ESP"供应商

REGISTER 19-3: AD1CON3: ADC1 CONTROL REGISTER 3

R/W-0	U-0	U-0	R/W-0	R/W-0	R/W-0	R/W-0	R/W-0
ADRC	—	—	SAMC<4:0>				
bit 15							bit 8

U-0	U-0	R/W-0	R/W-0	R/W-0	R/W-0	R/W-0	R/W-0
—	—	ADCS<5:0>					
bit 7							bit 0

Legend:			
R = Readable bit	W = Writable bit	U = Unimplemented bit, read as ‘0’	
-n = Value at POR	‘1’ = Bit is set	‘0’ = Bit is cleared	x = Bit is unknown

bit 15 **ADRC:** ADC Conversion Clock Source bit
1 = ADC internal RC clock
0 = Clock derived from system clock

bit 14-13 **Unimplemented:** Read as ‘0’

bit 12-8 **SAMC<4:0>:** Auto Sample Time bits
11111 = 31 TAD
•
•
•
00001 = 1 TAD
00000 = 0 TAD

bit 7-6 **Unimplemented:** Read as ‘0’

bit 5-0 **ADCS<5:0>:** ADC Conversion Clock Select bits
111111 = TCY · (ADCS<7:0> + 1) = 64 · TCY = TAD
•
•
•
000010 = TCY · (ADCS<7:0> + 1) = 3 · TCY = TAD
000001 = TCY · (ADCS<7:0> + 1) = 2 · TCY = TAD
000000 = TCY · (ADCS<7:0> + 1) = 1 · TCY = TAD

查询"DSPIC33FJ12MC02ESP"供应商

REGISTER 19-4: AD1CHS123: ADC1 INPUT CHANNEL 1, 2, 3 SELECT REGISTER

U-0	U-0	U-0	U-0	U-0	R/W-0	R/W-0	R/W-0
—	—	—	—	—	CH123NB<1:0>		CH123SB
bit 15							bit 8

U-0	U-0	U-0	U-0	U-0	R/W-0	R/W-0	R/W-0
—	—	—	—	—	CH123NA<1:0>		CH123SA
bit 7							bit 0

Legend:			
R = Readable bit	W = Writable bit	U = Unimplemented bit, read as ‘0’	
-n = Value at POR	‘1’ = Bit is set	‘0’ = Bit is cleared	x = Bit is unknown

bit 15-11 **Unimplemented:** Read as ‘0’

bit 10-9 **CH123NB<1:0>:** Channel 1, 2, 3 Negative Input Select for Sample B bits

If AD12B = 1:
11 = Reserved
10 = Reserved
01 = Reserved
00 = Reserved

If AD12B = 0:
11 = Reserved
10 = Reserved
01 = CH1, CH2, CH3 negative input is VREF-
00 = CH1, CH2, CH3 negative input is VREF-

bit 8 **CH123SB:** Channel 1, 2, 3 Positive Input Select for Sample B bit

dsPIC33FJ12MC201 devices only:
If AD12B = 1:
1 = Reserved
0 = Reserved

If AD12B = 0:
1 = CH1 positive input is AN3, CH2 and CH3 positive inputs are not connected
0 = CH1 positive input is AN0, CH2 positive input is AN1, CH3 positive input is AN2

dsPIC33FJ12MC202 devices only:
If AD12B = 1:
1 = Reserved
0 = Reserved

If AD12B = 0:
1 = CH1 positive input is AN3, CH2 positive input is AN4, CH3 positive input is AN5
0 = CH1 positive input is AN0, CH2 positive input is AN1, CH3 positive input is AN2

bit 7-3 **Unimplemented:** Read as ‘0’

 © 2007 Microchip Technology Inc.

查询"DSPIC33FJ12MC02ESP"供应商

REGISTER 19-4: AD1CHS123: ADC1 INPUT CHANNEL 1, 2, 3 SELECT REGISTER (CONTINUED)

bit 2-1 **CH123NA<1:0>:** Channel 1, 2, 3 Negative Input Select for Sample A bits

If AD12B = 1:
11 = Reserved
10 = Reserved
01 = Reserved
00 = Reserved

If AD12B = 0:
11 = Reserved
10 = Reserved
01 = CH1, CH2, CH3 negative input is VREF-
00 = CH1, CH2, CH3 negative input is VREF-

bit 0 **CH123SA:** Channel 1, 2, 3 Positive Input Select for Sample A bit

dsPIC33FJ12MC201 devices only:

If AD12B = 1:
1 = Reserved
0 = Reserved

If AD12B = 0:
1 = CH1 positive input is AN3, CH2 and CH3 positive inputs are not connected
0 = CH1 positive input is AN0, CH2 positive input is AN1, CH3 positive input is AN2

dsPIC33FJ12MC202 devices only:

If AD12B = 1:
1 = Reserved
0 = Reserved

If AD12B = 0:
1 = CH1 positive input is AN3, CH2 positive input is AN4, CH3 positive input is AN5
0 = CH1 positive input is AN0, CH2 positive input is AN1, CH3 positive input is AN2

查询"DSPIC33FJ12MC02ESP"供应商

REGISTER 19-5: AD1CHS0: ADC1 INPUT CHANNEL 0 SELECT REGISTER

R/W-0	U-0	U-0	R/W-0	R/W-0	R/W-0	R/W-0	R/W-0
CH0NB	—	—	CH0SB<4:0>				
bit 15							bit 8

R/W-0	U-0	U-0	R/W-0	R/W-0	R/W-0	R/W-0	R/W-0
CH0NA	—	—	CH0SA<4:0>				
bit 7							bit 0

Legend:			
R = Readable bit	W = Writable bit	U = Unimplemented bit, read as ‘0’	
-n = Value at POR	‘1’ = Bit is set	‘0’ = Bit is cleared	x = Bit is unknown

bit 15 **CH0NB:** Channel 0 Negative Input Select for Sample B bit
1 = Channel 0 negative input is AN1
0 = Channel 0 negative input is VREF-

bit 14-13 **Unimplemented:** Read as ‘0’

bit 12-8 **CH0SB<4:0>:** Channel 0 Positive Input Select for Sample B bits
01001 = Channel 0 positive input is AN9
01000 = Channel 0 positive input is AN8
•
•
•
00010 = Channel 0 positive input is AN2
00001 = Channel 0 positive input is AN1
00000 = Channel 0 positive input is AN0

bit 7 **CH0NA:** Channel 0 Negative Input Select for Sample A bit
1 = Channel 0 negative input is AN1
0 = Channel 0 negative input is VREF-

bit 6-5 **Unimplemented:** Read as ‘0’

bit 4-0 **CH0SA<4:0>:** Channel 0 Positive Input Select for Sample A bits

dsPIC33FJ12MC201 devices only:
00011 = Channel 0 positive input is AN3
00010 = Channel 0 positive input is AN2
00001 = Channel 0 positive input is AN1
00000 = Channel 0 positive input is AN0

dsPIC33FJ12MC202 devices only:
00101 = Channel 0 positive input is AN5
00100 = Channel 0 positive input is AN4
00011 = Channel 0 positive input is AN3
00010 = Channel 0 positive input is AN2
00001 = Channel 0 positive input is AN1
00000 = Channel 0 positive input is AN0

 © 2007 Microchip Technology Inc.

查询"DSPIC33FJ12MC02ESP"供应商

REGISTER 19-6: AD1CSSL: ADC1 INPUT SCAN SELECT REGISTER LOW(1)

U-0	U-0	U-0	U-0	U-0	U-0	U-0	U-0
—	—	—	—	—	—	—	—
bit 15							bit 8

U-0	U-0	R/W-0	R/W-0	R/W-0	R/W-0	R/W-0	R/W-0
—	—	CSS5	CSS4	CSS3	CSS2	CSS1	CSS0
bit 7							bit 0

Legend:			
R = Readable bit	W = Writable bit	U = Unimplemented bit, read as ‘0’	
-n = Value at POR	‘1’ = Bit is set	‘0’ = Bit is cleared	x = Bit is unknown

bit 15-6 **Unimplemented:** Read as ‘0’

bit 5-0 **CSS<5:0>:** ADC Input Scan Selection bits
1 = Select ANx for input scan
0 = Skip ANx for input scan

Note 1: On devices without nine analog inputs, all ADxCSSL bits can be selected. However, inputs selected for scan without a corresponding input on device will convert ADREF-.

查询"DSPIC33FJ12MC02ESP"供应商

REGISTER 19-7: AD1PCFGL: ADC1 PORT CONFIGURATION REGISTER LOW(1)

U-0	U-0	U-0	U-0	U-0	U-0	U-0	U-0
—	—	—	—	—	—	—	—
bit 15							bit 8

U-0	U-0	R/W-0	R/W-0	R/W-0	R/W-0	R/W-0	R/W-0
—	—	PCFG5	PCFG4	PCFG3	PCFG2	PCFG1	PCFG0
bit 7							bit 0

Legend:			
R = Readable bit	W = Writable bit	U = Unimplemented bit, read as ‘0’	
-n = Value at POR	‘1’ = Bit is set	‘0’ = Bit is cleared	x = Bit is unknown

bit 15-6 **Unimplemented:** Read as ‘0’

bit 5-0 **PCFG<5:0>:** ADC Port Configuration Control bits

1 = Port pin in Digital mode, port read input enabled, ADC input multiplexer connected to AVSS

0 = Port pin in Analog mode, port read input disabled, ADC samples pin voltage

Note 1: On devices without nine analog inputs, all PCFG bits are R/W. However, PCFG bits are ignored on ports without a corresponding input on device.

 © 2007 Microchip Technology Inc.

查询"DSPIC33FJ12MC02ESP"供应商

20.0 SPECIAL FEATURES

Note: This data sheet summarizes the features of the dsPIC33FJ12MC201/202 devices. It is not intended to be a comprehensive reference source. To complement the information in this data sheet, refer to the *"dsPIC33F Family Reference Manual"*. Please see the Microchip web site (www.microchip.com) for the latest dsPIC33F Family Reference Manual chapters.

dsPIC33FJ12MC201/202 devices include several features intended to maximize application flexibility and reliability, and minimize cost through elimination of external components. These are:

- Flexible configuration
- Watchdog Timer (WDT)
- Code Protection and CodeGuard™ Security
- JTAG Boundary Scan Interface
- In-Circuit Serial Programming™ (ICSP™)
- In-Circuit emulation

20.1 Configuration Bits

The Configuration bits can be programmed (read as '0'), or left unprogrammed (read as '1'), to select various device configurations. These bits are mapped starting at program memory location 0xF80000.

The individual Configuration bit descriptions for the FBS, FGS, FOSCSEL, FOSC, FWDT, FPOR and FICD Configuration registers are shown in Table 20-2.

Note that address 0xF80000 is beyond the user program memory space. It belongs to the configuration memory space (0x800000-0xFFFFFF), which can only be accessed using table reads and table writes.

The upper byte of all device Configuration registers should always be '1111 1111'. This makes them appear to be NOP instructions in the remote event that their locations are ever executed by accident. Since Configuration bits are not implemented in the corresponding locations, writing '1's to these locations has no effect on device operation.

To prevent inadvertent configuration changes during code execution, all programmable Configuration bits are write-once. After a bit is initially programmed during a power cycle, it cannot be written to again. Changing a device configuration requires that power to the device be cycled.

The Device Configuration register map is shown in Table 20-1.

TABLE 20-1: DEVICE CONFIGURATION REGISTER MAP

Address	Name	Bit 7	Bit 6	Bit 5	Bit 4	Bit 3	Bit 2	Bit 1	Bit 0
0xF80000	FBS	—	—	—	—	BSS<2:0>			BWRP
0xF80002	RESERVED	Reserved(1)							
0xF80004	FGS	—	—	—	—	—	GSS<1:0>		GWRP
0xF80006	FOSCSEL	IESO	—	—	—		FNOSC<2:0>		
0xF80008	FOSC	FCKSM<1:0>		IOL1WAY	—	—	OSCIOFNC	POSCMD<1:0>	
0xF8000A	FWDT	FWDTEN	WINDIS	—	WDTPRE	WDTPOST<3:0>			
0xF8000C	FPOR	PWMPIN	HPOL	LPOL	ALTI2C	—	FPWRT<2:0>		
0xF8000E	RESERVED	Reserved(1)							
0xF80010	FUID0	User Unit ID Byte 0							
0xF80012	FUID1	User Unit ID Byte 1							
0xF80014	FUID2	User Unit ID Byte 2							
0xF80016	FUID3	User Unit ID Byte 3							

Note 1: These reserved bits read as '1' and must be programmed as '1'.

查询"DSPIC33FJ12MC02ESP"供应商

TABLE 20-2: DSPIC33F CONFIGURATION BITS DESCRIPTION

Bit Field	Register	Description
BWRP	FBS	Boot Segment Program Flash Write Protection 1 = Boot segment can be written 0 = Boot segment is write-protected
BSS<2:0>	FBS	Boot Segment Program Flash Code Protection Size X11 = No Boot program Flash segment Boot space is 256 Instruction Words (except interrupt vectors) 110 = Standard security; boot program Flash segment ends at 0x0003FE 010 = High security; boot program Flash segment ends at 0x0003FE Boot space is 768 Instruction Words (except interrupt vectors) 101 = Standard security; boot program Flash segment, ends at 0x0007FE 001 = High security; boot program Flash segment ends at 0x0007FE Boot space is 1792 Instruction Words (except interrupt vectors) 100 = Standard security; boot program Flash segment ends at 0x000FFE 000 = High security; boot program Flash segment ends at 0x000FFE
GSS<1:0>	FGS	General Segment Code-Protect bit 11 = User program memory is not code-protected 10 = Standard security 0x = High security
GWRP	FGS	General Segment Write-Protect bit 1 = User program memory is not write-protected 0 = User program memory is write-protected
IESO	FOSCSEL	Two-speed Oscillator Start-up Enable bit 1 = Start-up device with FRC, then automatically switch to the user-selected oscillator source when ready 0 = Start-up device with user-selected oscillator source
FNOSC<2:0>	FOSCSEL	Initial Oscillator Source Selection bits 111 = Internal Fast RC (FRC) oscillator with postscaler 110 = Internal Fast RC (FRC) oscillator with divide-by-16 101 = LPRC oscillator 100 = Secondary (LP) oscillator 011 = Primary (XT, HS, EC) oscillator with PLL 010 = Primary (XT, HS, EC) oscillator 001 = Internal Fast RC (FRC) oscillator with PLL 000 = FRC oscillator
FCKSM<1:0>	FOSC	Clock Switching Mode bits 1x = Clock switching is disabled, Fail-Safe Clock Monitor is disabled 01 = Clock switching is enabled, Fail-Safe Clock Monitor is disabled 00 = Clock switching is enabled, Fail-Safe Clock Monitor is enabled
IOL1WAY	FOSC	Peripheral pin select configuration 1 = Allow only one reconfiguration 0 = Allow multiple reconfigurations
OSCIOFNC	FOSC	OSC2 Pin Function bit (except in XT and HS modes) 1 = OSC2 is clock output 0 = OSC2 is general purpose digital I/O pin

 © 2007 Microchip Technology Inc.

查询"DSPIC33FJ12MC02ESP"供应商

TABLE 20-2: DSPIC33F CONFIGURATION BITS DESCRIPTION (CONTINUED)

Bit Field	Register	Description
POSCMD<1:0>	FOSC	Primary Oscillator Mode Select bits 11 = Primary oscillator disabled 10 = HS Crystal Oscillator mode 01 = XT Crystal Oscillator mode 00 = EC (External Clock) mode
FWDTEN	FWDT	Watchdog Timer Enable bit 1 = Watchdog Timer always enabled (LPRC oscillator cannot be disabled. Clearing the SWDTEN bit in the RCON register will have no effect.) 0 = Watchdog Timer enabled/disabled by user software (LPRC can be disabled by clearing the SWDTEN bit in the RCON register)
WINDIS	FWDT	Watchdog Timer Window Enable bit 1 = Watchdog Timer in Non-Window mode 0 = Watchdog Timer in Window mode
WDTPRE	FWDT	Watchdog Timer Prescaler bit 1 = 1:128 0 = 1:32
WDTPOST<3:0>	FWDT	Watchdog Timer Postscaler bits 1111 = 1:32,768 1110 = 1:16,384 . . . 0001 = 1:2 0000 = 1:1
PWMPIN	FPOR	Motor Control PWM Module Pin Mode bit 1 = PWM module pins controlled by PORT register at device Reset (tri-stated) 0 = PWM module pins controlled by PWM module at device Reset (configured as output pins)
HPOL	FPOR	Motor Control PWM High Side Polarity bit 1 = PWM module high side output pins have active-high output polarity 0 = PWM module high side output pins have active-low output polarity
LPOL	FPOR	Motor Control PWM Low Side Polarity bit 1 = PWM module low side output pins have active-high output polarity 0 = PWM module low side output pins have active-low output polarity
FPWRT<2:0>	FPOR	Power-on Reset Timer Value Select bits 111 = PWRT = 128 ms 110 = PWRT = 64 ms 101 = PWRT = 32 ms 100 = PWRT = 16 ms 011 = PWRT = 8 ms 010 = PWRT = 4 ms 001 = PWRT = 2 ms 000 = PWRT = Disabled
ALTI2C	FPOR	Alternate I^2C™ pins 1 = I^2C mapped to SDA1/SCL1 pins 0 = I^2C mapped to ASDA1/ASCL1 pins

查询"DSPIC33FJ12MC02ESP"供应商

20.2 On-Chip Voltage Regulator

All of the dsPIC33FJ12MC201/202 devices power their core digital logic at a nominal 2.5V. This can create a conflict for designs that are required to operate at a higher typical voltage, such as 3.3V. To simplify system design, all devices in the dsPIC33FJ12MC201/202 family incorporate an on-chip regulator that allows the device to run its core logic from VDD.

The regulator provides power to the core from the other VDD pins. When the regulator is enabled, a low-ESR (less than 5 ohms) capacitor (such as tantalum or ceramic) must be connected to the VDDCORE/VCAP pin (Figure 20-1). This helps to maintain the stability of the regulator. The recommended value for the filter capacitor is provided in Table 23-13 located in **Section 23.1 "DC Characteristics"**.

On a POR, it takes approximately 20 μs for the on-chip voltage regulator to generate an output voltage. During this time, designated as TSTARTUP, code execution is disabled. TSTARTUP is applied every time the device resumes operation after any power-down.

FIGURE 20-1: CONNECTIONS FOR THE ON-CHIP VOLTAGE REGULATOR(1)

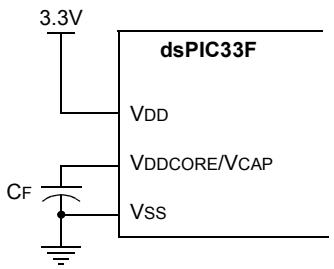

Note 1: These are typical operating voltages. Refer to **Section TABLE 23-13: "Internal Voltage Regulator Specifications"** located in **Section 23.1 "DC Characteristics"** for the full operating ranges of VDD and VDDCORE.

20.3 BOR: Brown-Out Reset

The Brown-out Reset (BOR) module is based on an internal voltage reference circuit that monitors the regulated supply voltage VDDCORE. The main purpose of the BOR module is to generate a device Reset when a brown-out condition occurs. Brown-out conditions are generally caused by glitches on the AC mains (for example, missing portions of the AC cycle waveform due to bad power transmission lines, or voltage sags due to excessive current draw when a large inductive load is turned on).

A BOR generates a Reset pulse, which resets the device. The BOR selects the clock source, based on the device Configuration bit values (FNOSC<2:0> and POSCMD<1:0>).

If an oscillator mode is selected, the BOR activates the Oscillator Start-up Timer (OST). The system clock is held until OST expires. If the PLL is used, the clock is held until the LOCK bit (OSCCON<5>) is '1'.

Concurrently, the PWRT time-out (TPWRT) is applied before the internal Reset is released. If TPWRT = 0 and a crystal oscillator is being used, then a nominal delay of TFSCM = 100 is applied. The total delay in this case is TFSCM.

The BOR Status bit (RCON<1>) is set to indicate that a BOR has occurred. The BOR circuit, if enabled, continues to operate while in Sleep or Idle modes and resets the device should VDD fall below the BOR threshold voltage.

 © 2007 Microchip Technology Inc.

查询"DSPIC33FJ12MC02ESP"供应商

20.4 Watchdog Timer (WDT)

For dsPIC33FJ12MC201/202 devices, the WDT is driven by the LPRC oscillator. When the WDT is enabled, the clock source is also enabled.

20.4.1 PRESCALER/POSTSCALER

The nominal WDT clock source from LPRC is 32 kHz. This feeds a prescaler than can be configured for either 5-bit (divide-by-32) or 7-bit (divide-by-128) operation. The prescaler is set by the WDTPRE Configuration bit. With a 32 kHz input, the prescaler yields a nominal WDT time-out period (TWDT) of 1 ms in 5-bit mode, or 4 ms in 7-bit mode.

A variable postscaler divides down the WDT prescaler output and allows for a wide range of time-out periods. The postscaler is controlled by the WDTPOST<3:0> Configuration bits (FWDT<3:0>), which allow the selection of 16 settings, from 1:1 to 1:32,768. Using the prescaler and postscaler, time-out periods ranging from 1 ms to 131 seconds can be achieved.

The WDT, prescaler and postscaler are reset:

- On any device Reset
- On the completion of a clock switch, whether invoked by software (i.e., setting the OSWEN bit after changing the NOSC bits) or by hardware (i.e., Fail-Safe Clock Monitor)
- When a PWRSAV instruction is executed (i.e., Sleep or Idle mode is entered)
- When the device exits Sleep or Idle mode to resume normal operation
- By a CLRWDT instruction during normal execution

Note:	The CLRWDT and PWRSAV instructions clear the prescaler and postscaler counts when executed.

20.4.2 SLEEP AND IDLE MODES

If the WDT is enabled, it will continue to run during Sleep or Idle modes. When the WDT time-out occurs, the device will wake the device and code execution will continue from where the PWRSAV instruction was executed. The corresponding SLEEP or IDLE bits (RCON<3,2>) will need to be cleared in software after the device wakes up.

20.4.3 ENABLING WDT

The WDT is enabled or disabled by the FWDTEN Configuration bit in the FWDT Configuration register. When the FWDTEN Configuration bit is set, the WDT is always enabled.

The WDT can be optionally controlled in software when the FWDTEN Configuration bit has been programmed to '0'. The WDT is enabled in software by setting the SWDTEN control bit (RCON<5>). The SWDTEN control bit is cleared on any device Reset. The software WDT option allows the user application to enable the WDT for critical code segments and disable the WDT during non-critical segments for maximum power savings.

Note:	If the WINDIS bit (FWDT<6>) is cleared, the CLRWDT instruction should be executed by the application software only during the last 1/4 of the WDT period. This CLRWDT window can be determined by using a timer. If a CLRWDT instruction is executed before this window, a WDT Reset occurs.

The WDT flag bit, WDTO (RCON<4>), is not automatically cleared following a WDT time-out. To detect subsequent WDT events, the flag must be cleared in software.

FIGURE 20-2: WDT BLOCK DIAGRAM

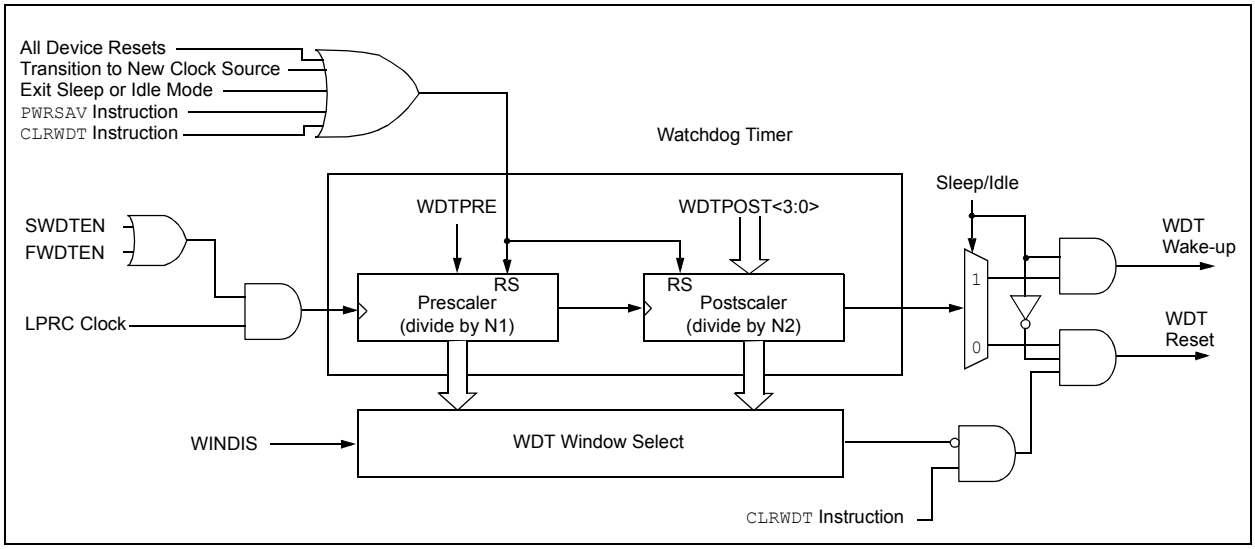

查询"DSPIC33FJ12MC02ESP"供应商

20.5 JTAG Interface

dsPIC33FJ12MC201/202 devices implement a JTAG interface, which supports boundary scan device testing, as well as in-circuit programming. Detailed information on this interface will be provided in future revisions of the document.

20.6 In-Circuit Serial Programming

The dsPIC33FJ12MC201/202 devices can be serially programmed while in the end application circuit. This is done with two lines for clock and data and three other lines for power, ground and the programming sequence. Serial programming allows customers to manufacture boards with unprogrammed devices and then program the digital signal controller just before shipping the product. Serial programming also allows the most recent firmware or a custom firmware to be programmed. Refer to the *"dsPIC33F/PIC24H Flash Programming Specification"* (DS70152) document for details about In-Circuit Serial Programming (ICSP).

Any of the three pairs of programming clock/data pins can be used:

- PGC1/EMUC1 and PGD1/EMUD1
- PGC2/EMUC2 and PGD2/EMUD2
- PGC3/EMUC3 and PGD3/EMUD3

20.7 In-Circuit Debugger

When MPLAB® ICD 2 is selected as a debugger, the in-circuit debugging functionality is enabled. This function allows simple debugging functions when used with MPLAB IDE. Debugging functionality is controlled through the EMUCx (Emulation/Debug Clock) and EMUDx (Emulation/Debug Data) pin functions.

Any of the three pairs of debugging clock/data pins can be used:

- PGC1/EMUC1 and PGD1/EMUD1
- PGC2/EMUC2 and PGD2/EMUD2
- PGC3/EMUC3 and PGD3/EMUD3

To use the in-circuit debugger function of the device, the design must implement ICSP connections to $\overline{MCLR}$, VDD, VSS, PGC, PGD and the EMUDx/EMUCx pin pair. In addition, when the feature is enabled, some of the resources are not available for general use. These resources include the first 80 bytes of data RAM and two I/O pins.

20.8 Code Protection and CodeGuard™ Security

The dsPIC33FJ12MC201/202 devices offer the intermediate implementation of CodeGuard Security. CodeGuard Security enables multiple parties to securely share resources (memory, interrupts and peripherals) on a single chip. This feature helps protect individual Intellectual Property in collaborative system designs.

When coupled with software encryption libraries, CodeGuard Security can be used to securely update Flash even when multiple IPs reside on the single chip. The code protection features vary depending on the actual dsPIC33F implemented. The following sections provide an overview of these features.

Secure segment and RAM protection is not implemented in dsPIC33FJ12MC201/202 devices.

TABLE 20-3: CODE FLASH SECURITY SEGMENT SIZES FOR 12 KBYTE DEVICES

CONFIG BITS		
BSS<2:0> = x11 **0K**	VS = 256 IW GS = 3840 IW	000000h 0001FEh 000200h 0003FEh 000400h 0007FEh 000800h 000FFEh 001000h 001FFEh
BSS<2:0> = x10 **256**	VS = 256 IW BS = 256 IW GS = 3584 IW	000000h 0001FEh 000200h 0003FEh 000400h 0007FEh 000800h 000FFEh 001000h 001FFEh
BSS<2:0> = x01 **768**	VS = 256 IW BS = 768 IW GS = 3072 IW	000000h 0001FEh 000200h 0003FEh 000400h 0007FEh 000800h 000FFEh 001000h 001FFEh
BSS<2:0> = x00 **1792**	VS = 256 IW BS = 1792 IW GS = 2048 IW	000000h 0001FEh 000200h 0003FEh 000400h 0007FEh 000800h 000FFEh 001000h 001FFEh

Note: Refer to **Section 23. "CodeGuard™ Security"** (DS70199) of the *dsPIC33F Family Reference Manual* for further information on usage, configuration and operation of CodeGuard Security.

 © 2007 Microchip Technology Inc.

查询"DSPIC33FJ12MC02ESP"供应商

21.0 INSTRUCTION SET SUMMARY

Note:	This data sheet summarizes the features of the dsPIC33FJ12MC201/202 devices. It is not intended to be a comprehensive reference source. To complement the information in this data sheet, refer to the *"dsPIC33F Family Reference Manual"*. Please see the Microchip web site (www.microchip.com) for the latest dsPIC33F Family Reference Manual chapters.

The dsPIC33F instruction set is identical to that of the dsPIC30F.

Most instructions are a single program memory word (24 bits). Only three instructions require two program memory locations.

Each single-word instruction is a 24-bit word, divided into an 8-bit opcode, which specifies the instruction type and one or more operands, which further specify the operation of the instruction.

The instruction set is highly orthogonal and is grouped into five basic categories:

- Word or byte-oriented operations
- Bit-oriented operations
- Literal operations
- DSP operations
- Control operations

Table 21-1 shows the general symbols used in describing the instructions.

The dsPIC33F instruction set summary in Table 21-2 lists all the instructions, along with the status flags affected by each instruction.

Most word or byte-oriented W register instructions (including barrel shift instructions) have three operands:

- The first source operand, which is typically a register 'Wb' without any address modifier
- The second source operand, which is typically a register 'Ws' with or without an address modifier
- The destination of the result, which is typically a register 'Wd' with or without an address modifier

However, word or byte-oriented file register instructions have two operands:

- The file register specified by the value 'f'
- The destination, which could be either the file register 'f' or the W0 register, which is denoted as 'WREG'

Most bit-oriented instructions (including simple rotate/shift instructions) have two operands:

- The W register (with or without an address modifier) or file register (specified by the value of 'Ws' or 'f')
- The bit in the W register or file register (specified by a literal value or indirectly by the contents of register 'Wb')

The literal instructions that involve data movement can use some of the following operands:

- A literal value to be loaded into a W register or file register (specified by 'k')
- The W register or file register where the literal value is to be loaded (specified by 'Wb' or 'f')

However, literal instructions that involve arithmetic or logical operations use some of the following operands:

- The first source operand, which is a register 'Wb' without any address modifier
- The second source operand, which is a literal value
- The destination of the result (only if not the same as the first source operand), which is typically a register 'Wd' with or without an address modifier

The `MAC` class of DSP instructions can use some of the following operands:

- The accumulator (A or B) to be used (required operand)
- The W registers to be used as the two operands
- The X and Y address space prefetch operations
- The X and Y address space prefetch destinations
- The accumulator write back destination

The other DSP instructions do not involve any multiplication and can include:

- The accumulator to be used (required)
- The source or destination operand (designated as Wso or Wdo, respectively) with or without an address modifier
- The amount of shift specified by a W register 'Wn' or a literal value

The control instructions can use some of the following operands:

- A program memory address
- The mode of the table read and table write instructions

查询"DSPIC33FJ12MC02ESP"供应商

Most instructions are a single word. Certain double-word instructions are designed to provide all the required information in these 48 bits. In the second word, the 8 MSbs are '0's. If this second word is executed as an instruction (by itself), it will execute as a NOP.

The double-word instructions execute in two instruction cycles.

Most single-word instructions are executed in a single instruction cycle, unless a conditional test is true, or the program counter is changed as a result of the instruction. In these cases, the execution takes two instruction cycles with the additional instruction cycle(s) executed as a NOP. Notable exceptions are the BRA (unconditional/computed branch), indirect CALL/GOTO, all table reads and writes and RETURN/RETFIE instructions, which are single-word instructions but take two or three cycles. Certain instructions that involve skipping over the subsequent instruction require either two or three cycles if the skip is performed, depending on whether the instruction being skipped is a single-word or two-word instruction. Moreover, double-word moves require two cycles.

Note: For more details on the instruction set, refer to the *"dsPIC30F/33F Programmer's Reference Manual"* (DS70157).

TABLE 21-1: SYMBOLS USED IN OPCODE DESCRIPTIONS

Field	Description
#text	Means literal defined by "text"
(text)	Means "content of text"
[text]	Means "the location addressed by text"
{ }	Optional field or operation
<n:m>	Register bit field
.b	Byte mode selection
.d	Double-Word mode selection
.S	Shadow register select
.w	Word mode selection (default)
Acc	One of two accumulators {A, B}
AWB	Accumulator write back destination address register ∈ {W13, [W13]+ = 2}
bit4	4-bit bit selection field (used in word addressed instructions) ∈ {0...15}
C, DC, N, OV, Z	MCU Status bits: Carry, Digit Carry, Negative, Overflow, Sticky Zero
Expr	Absolute address, label or expression (resolved by the linker)
f	File register address ∈ {0x0000...0x1FFF}
lit1	1-bit unsigned literal ∈ {0,1}
lit4	4-bit unsigned literal ∈ {0...15}
lit5	5-bit unsigned literal ∈ {0...31}
lit8	8-bit unsigned literal ∈ {0...255}
lit10	10-bit unsigned literal ∈ {0...255} for Byte mode, {0:1023} for Word mode
lit14	14-bit unsigned literal ∈ {0...16384}
lit16	16-bit unsigned literal ∈ {0...65535}
lit23	23-bit unsigned literal ∈ {0...8388608}; LSb must be '0'
None	Field does not require an entry, can be blank
OA, OB, SA, SB	DSP Status bits: ACCA Overflow, ACCB Overflow, ACCA Saturate, ACCB Saturate
PC	Program Counter
Slit10	10-bit signed literal ∈ {-512...511}
Slit16	16-bit signed literal ∈ {-32768...32767}
Slit6	6-bit signed literal ∈ {-16...16}
Wb	Base W register ∈ {W0..W15}
Wd	Destination W register ∈ { Wd, [Wd], [Wd++], [Wd--], [++Wd], [--Wd] }
Wdo	Destination W register ∈ { Wnd, [Wnd], [Wnd++], [Wnd--], [++Wnd], [--Wnd], [Wnd+Wb] }
Wm,Wn	Dividend, Divisor working register pair (direct addressing)

 © 2007 Microchip Technology Inc.

查询"DSPIC33FJ12MC02ESP"供应商

TABLE 21-1: SYMBOLS USED IN OPCODE DESCRIPTIONS (CONTINUED)

Field	Description
Wm*Wm	Multiplicand and Multiplier working register pair for Square instructions ∈ {W4 * W4,W5 * W5,W6 * W6,W7 * W7}
Wm*Wn	Multiplicand and Multiplier working register pair for DSP instructions ∈ {W4 * W5,W4 * W6,W4 * W7,W5 * W6,W5 * W7,W6 * W7}
Wn	One of 16 working registers ∈ {W0..W15}
Wnd	One of 16 destination working registers ∈ {W0..W15}
Wns	One of 16 source working registers ∈ {W0..W15}
WREG	W0 (working register used in file register instructions)
Ws	Source W register ∈ { Ws, [Ws], [Ws++], [Ws--], [++Ws], [--Ws] }
Wso	Source W register ∈ { Wns, [Wns], [Wns++], [Wns--], [++Wns], [--Wns], [Wns+Wb] }
Wx	X data space prefetch address register for DSP instructions ∈ {[W8] + = 6, [W8] + = 4, [W8] + = 2, [W8], [W8] - = 6, [W8] - = 4, [W8] - = 2, [W9] + = 6, [W9] + = 4, [W9] + = 2, [W9], [W9] - = 6, [W9] - = 4, [W9] - = 2, [W9 + W12], none}
Wxd	X data space prefetch destination register for DSP instructions ∈ {W4..W7}
Wy	Y data space prefetch address register for DSP instructions ∈ {[W10] + = 6, [W10] + = 4, [W10] + = 2, [W10], [W10] - = 6, [W10] - = 4, [W10] - = 2, [W11] + = 6, [W11] + = 4, [W11] + = 2, [W11], [W11] - = 6, [W11] - = 4, [W11] - = 2, [W11 + W12], none}
Wyd	Y data space prefetch destination register for DSP instructions ∈ {W4..W7}

查询"DSPIC33FJ12MC02ESP"供应商

TABLE 21-2: INSTRUCTION SET OVERVIEW

Base Instr #	Assembly Mnemonic	Assembly Syntax		Description	# of Words	# of Cycles	Status Flags Affected
1	ADD	ADD	Acc	Add Accumulators	1	1	OA,OB,SA,SB
		ADD	f	f = f + WREG	1	1	C,DC,N,OV,Z
		ADD	f,WREG	WREG = f + WREG	1	1	C,DC,N,OV,Z
		ADD	#lit10,Wn	Wd = lit10 + Wd	1	1	C,DC,N,OV,Z
		ADD	Wb,Ws,Wd	Wd = Wb + Ws	1	1	C,DC,N,OV,Z
		ADD	Wb,#lit5,Wd	Wd = Wb + lit5	1	1	C,DC,N,OV,Z
		ADD	Wso,#Slit4,Acc	16-bit Signed Add to Accumulator	1	1	OA,OB,SA,SB
2	ADDC	ADDC	f	f = f + WREG + (C)	1	1	C,DC,N,OV,Z
		ADDC	f,WREG	WREG = f + WREG + (C)	1	1	C,DC,N,OV,Z
		ADDC	#lit10,Wn	Wd = lit10 + Wd + (C)	1	1	C,DC,N,OV,Z
		ADDC	Wb,Ws,Wd	Wd = Wb + Ws + (C)	1	1	C,DC,N,OV,Z
		ADDC	Wb,#lit5,Wd	Wd = Wb + lit5 + (C)	1	1	C,DC,N,OV,Z
3	AND	AND	f	f = f .AND. WREG	1	1	N,Z
		AND	f,WREG	WREG = f .AND. WREG	1	1	N,Z
		AND	#lit10,Wn	Wd = lit10 .AND. Wd	1	1	N,Z
		AND	Wb,Ws,Wd	Wd = Wb .AND. Ws	1	1	N,Z
		AND	Wb,#lit5,Wd	Wd = Wb .AND. lit5	1	1	N,Z
4	ASR	ASR	f	f = Arithmetic Right Shift f	1	1	C,N,OV,Z
		ASR	f,WREG	WREG = Arithmetic Right Shift f	1	1	C,N,OV,Z
		ASR	Ws,Wd	Wd = Arithmetic Right Shift Ws	1	1	C,N,OV,Z
		ASR	Wb,Wns,Wnd	Wnd = Arithmetic Right Shift Wb by Wns	1	1	N,Z
		ASR	Wb,#lit5,Wnd	Wnd = Arithmetic Right Shift Wb by lit5	1	1	N,Z
5	BCLR	BCLR	f,#bit4	Bit Clear f	1	1	None
		BCLR	Ws,#bit4	Bit Clear Ws	1	1	None
6	BRA	BRA	C,Expr	Branch if Carry	1	1 (2)	None
		BRA	GE,Expr	Branch if greater than or equal	1	1 (2)	None
		BRA	GEU,Expr	Branch if unsigned greater than or equal	1	1 (2)	None
		BRA	GT,Expr	Branch if greater than	1	1 (2)	None
		BRA	GTU,Expr	Branch if unsigned greater than	1	1 (2)	None
		BRA	LE,Expr	Branch if less than or equal	1	1 (2)	None
		BRA	LEU,Expr	Branch if unsigned less than or equal	1	1 (2)	None
		BRA	LT,Expr	Branch if less than	1	1 (2)	None
		BRA	LTU,Expr	Branch if unsigned less than	1	1 (2)	None
		BRA	N,Expr	Branch if Negative	1	1 (2)	None
		BRA	NC,Expr	Branch if Not Carry	1	1 (2)	None
		BRA	NN,Expr	Branch if Not Negative	1	1 (2)	None
		BRA	NOV,Expr	Branch if Not Overflow	1	1 (2)	None
		BRA	NZ,Expr	Branch if Not Zero	1	1 (2)	None
		BRA	OA,Expr	Branch if Accumulator A overflow	1	1 (2)	None
		BRA	OB,Expr	Branch if Accumulator B overflow	1	1 (2)	None
		BRA	OV,Expr	Branch if Overflow	1	1 (2)	None
		BRA	SA,Expr	Branch if Accumulator A saturated	1	1 (2)	None
		BRA	SB,Expr	Branch if Accumulator B saturated	1	1 (2)	None
		BRA	Expr	Branch Unconditionally	1	2	None
		BRA	Z,Expr	Branch if Zero	1	1 (2)	None
		BRA	Wn	Computed Branch	1	2	None
7	BSET	BSET	f,#bit4	Bit Set f	1	1	None
		BSET	Ws,#bit4	Bit Set Ws	1	1	None
8	BSW	BSW.C	Ws,Wb	Write C bit to Ws<Wb>	1	1	None
		BSW.Z	Ws,Wb	Write Z bit to Ws<Wb>	1	1	None
9	BTG	BTG	f,#bit4	Bit Toggle f	1	1	None
		BTG	Ws,#bit4	Bit Toggle Ws	1	1	None

 © 2007 Microchip Technology Inc.

查询"DSPIC33FJ12MC02ESP"供应商

TABLE 21-2: INSTRUCTION SET OVERVIEW (CONTINUED)

Base Instr #	Assembly Mnemonic	Assembly Syntax	Description	# of Words	# of Cycles	Status Flags Affected
10	BTSC	BTSC f,#bit4	Bit Test f, Skip if Clear	1	1 (2 or 3)	None
		BTSC Ws,#bit4	Bit Test Ws, Skip if Clear	1	1 (2 or 3)	None
11	BTSS	BTSS f,#bit4	Bit Test f, Skip if Set	1	1 (2 or 3)	None
		BTSS Ws,#bit4	Bit Test Ws, Skip if Set	1	1 (2 or 3)	None
12	BTST	BTST f,#bit4	Bit Test f	1	1	Z
		BTST.C Ws,#bit4	Bit Test Ws to C	1	1	C
		BTST.Z Ws,#bit4	Bit Test Ws to Z	1	1	Z
		BTST.C Ws,Wb	Bit Test Ws<Wb> to C	1	1	C
		BTST.Z Ws,Wb	Bit Test Ws<Wb> to Z	1	1	Z
13	BTSTS	BTSTS f,#bit4	Bit Test then Set f	1	1	Z
		BTSTS.C Ws,#bit4	Bit Test Ws to C, then Set	1	1	C
		BTSTS.Z Ws,#bit4	Bit Test Ws to Z, then Set	1	1	Z
14	CALL	CALL lit23	Call subroutine	2	2	None
		CALL Wn	Call indirect subroutine	1	2	None
15	CLR	CLR f	f = 0x0000	1	1	None
		CLR WREG	WREG = 0x0000	1	1	None
		CLR Ws	Ws = 0x0000	1	1	None
		CLR Acc,Wx,Wxd,Wy,Wyd,AWB	Clear Accumulator	1	1	OA,OB,SA,SB
16	CLRWDT	CLRWDT	Clear Watchdog Timer	1	1	WDTO,Sleep
17	COM	COM f	$f = \overline{f}$	1	1	N,Z
		COM f,WREG	$WREG = \overline{f}$	1	1	N,Z
		COM Ws,Wd	$Wd = \overline{Ws}$	1	1	N,Z
18	CP	CP f	Compare f with WREG	1	1	C,DC,N,OV,Z
		CP Wb,#lit5	Compare Wb with lit5	1	1	C,DC,N,OV,Z
		CP Wb,Ws	Compare Wb with Ws (Wb – Ws)	1	1	C,DC,N,OV,Z
19	CP0	CP0 f	Compare f with 0x0000	1	1	C,DC,N,OV,Z
		CP0 Ws	Compare Ws with 0x0000	1	1	C,DC,N,OV,Z
20	CPB	CPB f	Compare f with WREG, with Borrow	1	1	C,DC,N,OV,Z
		CPB Wb,#lit5	Compare Wb with lit5, with Borrow	1	1	C,DC,N,OV,Z
		CPB Wb,Ws	Compare Wb with Ws, with Borrow ($Wb – Ws – \overline{C}$)	1	1	C,DC,N,OV,Z
21	CPSEQ	CPSEQ Wb, Wn	Compare Wb with Wn, skip if =	1	1 (2 or 3)	None
22	CPSGT	CPSGT Wb, Wn	Compare Wb with Wn, skip if >	1	1 (2 or 3)	None
23	CPSLT	CPSLT Wb, Wn	Compare Wb with Wn, skip if <	1	1 (2 or 3)	None
24	CPSNE	CPSNE Wb, Wn	Compare Wb with Wn, skip if ≠	1	1 (2 or 3)	None
25	DAW	DAW Wn	Wn = decimal adjust Wn	1	1	C
26	DEC	DEC f	f = f – 1	1	1	C,DC,N,OV,Z
		DEC f,WREG	WREG = f – 1	1	1	C,DC,N,OV,Z
		DEC Ws,Wd	Wd = Ws – 1	1	1	C,DC,N,OV,Z
27	DEC2	DEC2 f	f = f – 2	1	1	C,DC,N,OV,Z
		DEC2 f,WREG	WREG = f – 2	1	1	C,DC,N,OV,Z
		DEC2 Ws,Wd	Wd = Ws – 2	1	1	C,DC,N,OV,Z
28	DISI	DISI #lit14	Disable Interrupts for k instruction cycles	1	1	None

查询"DSPIC33FJ12MC02ESP"供应商

TABLE 21-2: INSTRUCTION SET OVERVIEW (CONTINUED)

Base Instr #	Assembly Mnemonic	Assembly Syntax	Description	# of Words	# of Cycles	Status Flags Affected
29	DIV	DIV.S Wm,Wn	Signed 16/16-bit Integer Divide	1	18	N,Z,C,OV
		DIV.SD Wm,Wn	Signed 32/16-bit Integer Divide	1	18	N,Z,C,OV
		DIV.U Wm,Wn	Unsigned 16/16-bit Integer Divide	1	18	N,Z,C,OV
		DIV.UD Wm,Wn	Unsigned 32/16-bit Integer Divide	1	18	N,Z,C,OV
30	DIVF	DIVF Wm,Wn	Signed 16/16-bit Fractional Divide	1	18	N,Z,C,OV
31	DO	DO #lit14,Expr	Do code to PC + Expr, lit14 + 1 times	2	2	None
		DO Wn,Expr	Do code to PC + Expr, (Wn) + 1 times	2	2	None
32	ED	ED Wm*Wm,Acc,Wx,Wy,Wxd	Euclidean Distance (no accumulate)	1	1	OA,OB,OAB, SA,SB,SAB
33	EDAC	EDAC Wm*Wm,Acc,Wx,Wy,Wxd	Euclidean Distance	1	1	OA,OB,OAB, SA,SB,SAB
34	EXCH	EXCH Wns,Wnd	Swap Wns with Wnd	1	1	None
35	FBCL	FBCL Ws,Wnd	Find Bit Change from Left (MSb) Side	1	1	C
36	FF1L	FF1L Ws,Wnd	Find First One from Left (MSb) Side	1	1	C
37	FF1R	FF1R Ws,Wnd	Find First One from Right (LSb) Side	1	1	C
38	GOTO	GOTO Expr	Go to address	2	2	None
		GOTO Wn	Go to indirect	1	2	None
39	INC	INC f	f = f + 1	1	1	C,DC,N,OV,Z
		INC f,WREG	WREG = f + 1	1	1	C,DC,N,OV,Z
		INC Ws,Wd	Wd = Ws + 1	1	1	C,DC,N,OV,Z
40	INC2	INC2 f	f = f + 2	1	1	C,DC,N,OV,Z
		INC2 f,WREG	WREG = f + 2	1	1	C,DC,N,OV,Z
		INC2 Ws,Wd	Wd = Ws + 2	1	1	C,DC,N,OV,Z
41	IOR	IOR f	f = f .IOR. WREG	1	1	N,Z
		IOR f,WREG	WREG = f .IOR. WREG	1	1	N,Z
		IOR #lit10,Wn	Wd = lit10 .IOR. Wd	1	1	N,Z
		IOR Wb,Ws,Wd	Wd = Wb .IOR. Ws	1	1	N,Z
		IOR Wb,#lit5,Wd	Wd = Wb .IOR. lit5	1	1	N,Z
42	LAC	LAC Wso,#Slit4,Acc	Load Accumulator	1	1	OA,OB,OAB, SA,SB,SAB
43	LNK	LNK #lit14	Link Frame Pointer	1	1	None
44	LSR	LSR f	f = Logical Right Shift f	1	1	C,N,OV,Z
		LSR f,WREG	WREG = Logical Right Shift f	1	1	C,N,OV,Z
		LSR Ws,Wd	Wd = Logical Right Shift Ws	1	1	C,N,OV,Z
		LSR Wb,Wns,Wnd	Wnd = Logical Right Shift Wb by Wns	1	1	N,Z
		LSR Wb,#lit5,Wnd	Wnd = Logical Right Shift Wb by lit5	1	1	N,Z
45	MAC	MAC Wm*Wn,Acc,Wx,Wxd,Wy,Wyd , AWB	Multiply and Accumulate	1	1	OA,OB,OAB, SA,SB,SAB
		MAC Wm*Wm,Acc,Wx,Wxd,Wy,Wyd	Square and Accumulate	1	1	OA,OB,OAB, SA,SB,SAB
46	MOV	MOV f,Wn	Move f to Wn	1	1	None
		MOV f	Move f to f	1	1	N,Z
		MOV f,WREG	Move f to WREG	1	1	N,Z
		MOV #lit16,Wn	Move 16-bit literal to Wn	1	1	None
		MOV.b #lit8,Wn	Move 8-bit literal to Wn	1	1	None
		MOV Wn,f	Move Wn to f	1	1	None
		MOV Wso,Wdo	Move Ws to Wd	1	1	None
		MOV WREG,f	Move WREG to f	1	1	N,Z
		MOV.D Wns,Wd	Move Double from W(ns):W(ns + 1) to Wd	1	2	None
		MOV.D Ws,Wnd	Move Double from Ws to W(nd + 1):W(nd)	1	2	None
47	MOVSAC	MOVSAC Acc,Wx,Wxd,Wy,Wyd,AWB	Prefetch and store accumulator	1	1	None

 © 2007 Microchip Technology Inc.

查询"DSPIC33FJ12MC02ESP"供应商

TABLE 21-2: INSTRUCTION SET OVERVIEW (CONTINUED)

Base Instr #	Assembly Mnemonic	Assembly Syntax	Description	# of Words	# of Cycles	Status Flags Affected
48	MPY	MPY Wm*Wn,Acc,Wx,Wxd,Wy,Wyd	Multiply Wm by Wn to Accumulator	1	1	OA,OB,OAB, SA,SB,SAB
		MPY Wm*Wm,Acc,Wx,Wxd,Wy,Wyd	Square Wm to Accumulator	1	1	OA,OB,OAB, SA,SB,SAB
49	MPY.N	MPY.N Wm*Wn,Acc,Wx,Wxd,Wy,Wyd	-(Multiply Wm by Wn) to Accumulator	1	1	None
50	MSC	MSC Wm*Wm,Acc,Wx,Wxd,Wy,Wyd, AWB	Multiply and Subtract from Accumulator	1	1	OA,OB,OAB, SA,SB,SAB
51	MUL	MUL.SS Wb,Ws,Wnd	{Wnd + 1, Wnd} = signed(Wb) * signed(Ws)	1	1	None
		MUL.SU Wb,Ws,Wnd	{Wnd + 1, Wnd} = signed(Wb) * unsigned(Ws)	1	1	None
		MUL.US Wb,Ws,Wnd	{Wnd + 1, Wnd} = unsigned(Wb) * signed(Ws)	1	1	None
		MUL.UU Wb,Ws,Wnd	{Wnd + 1, Wnd} = unsigned(Wb) * unsigned(Ws)	1	1	None
		MUL.SU Wb,#lit5,Wnd	{Wnd + 1, Wnd} = signed(Wb) * unsigned(lit5)	1	1	None
		MUL.UU Wb,#lit5,Wnd	{Wnd + 1, Wnd} = unsigned(Wb) * unsigned(lit5)	1	1	None
		MUL f	W3:W2 = f * WREG	1	1	None
52	NEG	NEG Acc	Negate Accumulator	1	1	OA,OB,OAB, SA,SB,SAB
		NEG f	f = $\overline{f}$ + 1	1	1	C,DC,N,OV,Z
		NEG f,WREG	WREG = $\overline{f}$ + 1	1	1	C,DC,N,OV,Z
		NEG Ws,Wd	Wd = $\overline{Ws}$ + 1	1	1	C,DC,N,OV,Z
53	NOP	NOP	No Operation	1	1	None
		NOPR	No Operation	1	1	None
54	POP	POP f	Pop f from Top-of-Stack (TOS)	1	1	None
		POP Wdo	Pop from Top-of-Stack (TOS) to Wdo	1	1	None
		POP.D Wnd	Pop from Top-of-Stack (TOS) to W(nd):W(nd + 1)	1	2	None
		POP.S	Pop Shadow Registers	1	1	All
55	PUSH	PUSH f	Push f to Top-of-Stack (TOS)	1	1	None
		PUSH Wso	Push Wso to Top-of-Stack (TOS)	1	1	None
		PUSH.D Wns	Push W(ns):W(ns + 1) to Top-of-Stack (TOS)	1	2	None
		PUSH.S	Push Shadow Registers	1	1	None
56	PWRSAV	PWRSAV #lit1	Go into Sleep or Idle mode	1	1	WDTO,Sleep
57	RCALL	RCALL Expr	Relative Call	1	2	None
		RCALL Wn	Computed Call	1	2	None
58	REPEAT	REPEAT #lit14	Repeat Next Instruction lit14 + 1 times	1	1	None
		REPEAT Wn	Repeat Next Instruction (Wn) + 1 times	1	1	None
59	RESET	RESET	Software device Reset	1	1	None
60	RETFIE	RETFIE	Return from interrupt	1	3 (2)	None
61	RETLW	RETLW #lit10,Wn	Return with literal in Wn	1	3 (2)	None
62	RETURN	RETURN	Return from Subroutine	1	3 (2)	None
63	RLC	RLC f	f = Rotate Left through Carry f	1	1	C,N,Z
		RLC f,WREG	WREG = Rotate Left through Carry f	1	1	C,N,Z
		RLC Ws,Wd	Wd = Rotate Left through Carry Ws	1	1	C,N,Z
64	RLNC	RLNC f	f = Rotate Left (No Carry) f	1	1	N,Z
		RLNC f,WREG	WREG = Rotate Left (No Carry) f	1	1	N,Z
		RLNC Ws,Wd	Wd = Rotate Left (No Carry) Ws	1	1	N,Z
65	RRC	RRC f	f = Rotate Right through Carry f	1	1	C,N,Z
		RRC f,WREG	WREG = Rotate Right through Carry f	1	1	C,N,Z
		RRC Ws,Wd	Wd = Rotate Right through Carry Ws	1	1	C,N,Z

查询"DSPIC33FJ12MC02ESP"供应商

TABLE 21-2: INSTRUCTION SET OVERVIEW (CONTINUED)

Base Instr #	Assembly Mnemonic	Assembly Syntax		Description	# of Words	# of Cycles	Status Flags Affected
66	RRNC	RRNC	f	f = Rotate Right (No Carry) f	1	1	N,Z
		RRNC	f,WREG	WREG = Rotate Right (No Carry) f	1	1	N,Z
		RRNC	Ws,Wd	Wd = Rotate Right (No Carry) Ws	1	1	N,Z
67	SAC	SAC	Acc,#Slit4,Wdo	Store Accumulator	1	1	None
		SAC.R	Acc,#Slit4,Wdo	Store Rounded Accumulator	1	1	None
68	SE	SE	Ws,Wnd	Wnd = sign-extended Ws	1	1	C,N,Z
69	SETM	SETM	f	f = 0xFFFF	1	1	None
		SETM	WREG	WREG = 0xFFFF	1	1	None
		SETM	Ws	Ws = 0xFFFF	1	1	None
70	SFTAC	SFTAC	Acc,Wn	Arithmetic Shift Accumulator by (Wn)	1	1	OA,OB,OAB, SA,SB,SAB
		SFTAC	Acc,#Slit6	Arithmetic Shift Accumulator by Slit6	1	1	OA,OB,OAB, SA,SB,SAB
71	SL	SL	f	f = Left Shift f	1	1	C,N,OV,Z
		SL	f,WREG	WREG = Left Shift f	1	1	C,N,OV,Z
		SL	Ws,Wd	Wd = Left Shift Ws	1	1	C,N,OV,Z
		SL	Wb,Wns,Wnd	Wnd = Left Shift Wb by Wns	1	1	N,Z
		SL	Wb,#lit5,Wnd	Wnd = Left Shift Wb by lit5	1	1	N,Z
72	SUB	SUB	Acc	Subtract Accumulators	1	1	OA,OB,OAB, SA,SB,SAB
		SUB	f	f = f – WREG	1	1	C,DC,N,OV,Z
		SUB	f,WREG	WREG = f – WREG	1	1	C,DC,N,OV,Z
		SUB	#lit10,Wn	Wn = Wn – lit10	1	1	C,DC,N,OV,Z
		SUB	Wb,Ws,Wd	Wd = Wb – Ws	1	1	C,DC,N,OV,Z
		SUB	Wb,#lit5,Wd	Wd = Wb – lit5	1	1	C,DC,N,OV,Z
73	SUBB	SUBB	f	f = f – WREG – ($\overline{C}$)	1	1	C,DC,N,OV,Z
		SUBB	f,WREG	WREG = f – WREG – ($\overline{C}$)	1	1	C,DC,N,OV,Z
		SUBB	#lit10,Wn	Wn = Wn – lit10 – ($\overline{C}$)	1	1	C,DC,N,OV,Z
		SUBB	Wb,Ws,Wd	Wd = Wb – Ws – ($\overline{C}$)	1	1	C,DC,N,OV,Z
		SUBB	Wb,#lit5,Wd	Wd = Wb – lit5 – ($\overline{C}$)	1	1	C,DC,N,OV,Z
74	SUBR	SUBR	f	f = WREG – f	1	1	C,DC,N,OV,Z
		SUBR	f,WREG	WREG = WREG – f	1	1	C,DC,N,OV,Z
		SUBR	Wb,Ws,Wd	Wd = Ws – Wb	1	1	C,DC,N,OV,Z
		SUBR	Wb,#lit5,Wd	Wd = lit5 – Wb	1	1	C,DC,N,OV,Z
75	SUBBR	SUBBR	f	f = WREG – f – ($\overline{C}$)	1	1	C,DC,N,OV,Z
		SUBBR	f,WREG	WREG = WREG – f – ($\overline{C}$)	1	1	C,DC,N,OV,Z
		SUBBR	Wb,Ws,Wd	Wd = Ws – Wb – ($\overline{C}$)	1	1	C,DC,N,OV,Z
		SUBBR	Wb,#lit5,Wd	Wd = lit5 – Wb – ($\overline{C}$)	1	1	C,DC,N,OV,Z
76	SWAP	SWAP.b	Wn	Wn = nibble swap Wn	1	1	None
		SWAP	Wn	Wn = byte swap Wn	1	1	None
77	TBLRDH	TBLRDH	Ws,Wd	Read Prog<23:16> to Wd<7:0>	1	2	None
78	TBLRDL	TBLRDL	Ws,Wd	Read Prog<15:0> to Wd	1	2	None
79	TBLWTH	TBLWTH	Ws,Wd	Write Ws<7:0> to Prog<23:16>	1	2	None
80	TBLWTL	TBLWTL	Ws,Wd	Write Ws to Prog<15:0>	1	2	None
81	ULNK	ULNK		Unlink Frame Pointer	1	1	None
82	XOR	XOR	f	f = f .XOR. WREG	1	1	N,Z
		XOR	f,WREG	WREG = f .XOR. WREG	1	1	N,Z
		XOR	#lit10,Wn	Wd = lit10 .XOR. Wd	1	1	N,Z
		XOR	Wb,Ws,Wd	Wd = Wb .XOR. Ws	1	1	N,Z
		XOR	Wb,#lit5,Wd	Wd = Wb .XOR. lit5	1	1	N,Z
83	ZE	ZE	Ws,Wnd	Wnd = Zero-extend Ws	1	1	C,Z,N

 © 2007 Microchip Technology Inc.

查询"DSPIC33FJ12MC02ESP"供应商

22.0 DEVELOPMENT SUPPORT

The PIC® microcontrollers are supported with a full range of hardware and software development tools:

- Integrated Development Environment
  - MPLAB® IDE Software
- Assemblers/Compilers/Linkers
  - MPASM™ Assembler
  - MPLAB C18 and MPLAB C30 C Compilers
  - MPLINK™ Object Linker/ MPLIB™ Object Librarian
  - MPLAB ASM30 Assembler/Linker/Library
- Simulators
  - MPLAB SIM Software Simulator
- Emulators
  - MPLAB ICE 2000 In-Circuit Emulator
  - MPLAB REAL ICE™ In-Circuit Emulator
- In-Circuit Debugger
  - MPLAB ICD 2
- Device Programmers
  - PICSTART® Plus Development Programmer
  - MPLAB PM3 Device Programmer
  - PICkit™ 2 Development Programmer
- Low-Cost Demonstration and Development Boards and Evaluation Kits

22.1 MPLAB Integrated Development Environment Software

The MPLAB IDE software brings an ease of software development previously unseen in the 8/16-bit micro-controller market. The MPLAB IDE is a Windows® operating system-based application that contains:

- A single graphical interface to all debugging tools
  - Simulator
  - Programmer (sold separately)
  - Emulator (sold separately)
  - In-Circuit Debugger (sold separately)
- A full-featured editor with color-coded context
- A multiple project manager
- Customizable data windows with direct edit of contents
- High-level source code debugging
- Visual device initializer for easy register initialization
- Mouse over variable inspection
- Drag and drop variables from source to watch windows
- Extensive on-line help
- Integration of select third party tools, such as HI-TECH Software C Compilers and IAR C Compilers

The MPLAB IDE allows you to:

- Edit your source files (either assembly or C)
- One touch assemble (or compile) and download to PIC MCU emulator and simulator tools (automatically updates all project information)
- Debug using:
  - Source files (assembly or C)
  - Mixed assembly and C
  - Machine code

MPLAB IDE supports multiple debugging tools in a single development paradigm, from the cost-effective simulators, through low-cost in-circuit debuggers, to full-featured emulators. This eliminates the learning curve when upgrading to tools with increased flexibility and power.

查询"DSPIC33FJ12MC02ESP"供应商

22.2 MPASM Assembler

The MPASM Assembler is a full-featured, universal macro assembler for all PIC MCUs.

The MPASM Assembler generates relocatable object files for the MPLINK Object Linker, Intel® standard HEX files, MAP files to detail memory usage and symbol reference, absolute LST files that contain source lines and generated machine code and COFF files for debugging.

The MPASM Assembler features include:

- Integration into MPLAB IDE projects
- User-defined macros to streamline assembly code
- Conditional assembly for multi-purpose source files
- Directives that allow complete control over the assembly process

22.3 MPLAB C18 and MPLAB C30 C Compilers

The MPLAB C18 and MPLAB C30 Code Development Systems are complete ANSI C compilers for Microchip's PIC18 and PIC24 families of microcontrollers and the dsPIC30 and dsPIC33 family of digital signal controllers. These compilers provide powerful integration capabilities, superior code optimization and ease of use not found with other compilers.

For easy source level debugging, the compilers provide symbol information that is optimized to the MPLAB IDE debugger.

22.4 MPLINK Object Linker/ MPLIB Object Librarian

The MPLINK Object Linker combines relocatable objects created by the MPASM Assembler and the MPLAB C18 C Compiler. It can link relocatable objects from precompiled libraries, using directives from a linker script.

The MPLIB Object Librarian manages the creation and modification of library files of precompiled code. When a routine from a library is called from a source file, only the modules that contain that routine will be linked in with the application. This allows large libraries to be used efficiently in many different applications.

The object linker/library features include:

- Efficient linking of single libraries instead of many smaller files
- Enhanced code maintainability by grouping related modules together
- Flexible creation of libraries with easy module listing, replacement, deletion and extraction

22.5 MPLAB ASM30 Assembler, Linker and Librarian

MPLAB ASM30 Assembler produces relocatable machine code from symbolic assembly language for dsPIC30F devices. MPLAB C30 C Compiler uses the assembler to produce its object file. The assembler generates relocatable object files that can then be archived or linked with other relocatable object files and archives to create an executable file. Notable features of the assembler include:

- Support for the entire dsPIC30F instruction set
- Support for fixed-point and floating-point data
- Command line interface
- Rich directive set
- Flexible macro language
- MPLAB IDE compatibility

22.6 MPLAB SIM Software Simulator

The MPLAB SIM Software Simulator allows code development in a PC-hosted environment by simulating the PIC MCUs and dsPIC® DSCs on an instruction level. On any given instruction, the data areas can be examined or modified and stimuli can be applied from a comprehensive stimulus controller. Registers can be logged to files for further run-time analysis. The trace buffer and logic analyzer display extend the power of the simulator to record and track program execution, actions on I/O, most peripherals and internal registers.

The MPLAB SIM Software Simulator fully supports symbolic debugging using the MPLAB C18 and MPLAB C30 C Compilers, and the MPASM and MPLAB ASM30 Assemblers. The software simulator offers the flexibility to develop and debug code outside of the hardware laboratory environment, making it an excellent, economical software development tool.

 © 2007 Microchip Technology Inc.

查询"DSPIC33FJ12MC02ESP"供应商

22.7 MPLAB ICE 2000 High-Performance In-Circuit Emulator

The MPLAB ICE 2000 In-Circuit Emulator is intended to provide the product development engineer with a complete microcontroller design tool set for PIC microcontrollers. Software control of the MPLAB ICE 2000 In-Circuit Emulator is advanced by the MPLAB Integrated Development Environment, which allows editing, building, downloading and source debugging from a single environment.

The MPLAB ICE 2000 is a full-featured emulator system with enhanced trace, trigger and data monitoring features. Interchangeable processor modules allow the system to be easily reconfigured for emulation of different processors. The architecture of the MPLAB ICE 2000 In-Circuit Emulator allows expansion to support new PIC microcontrollers.

The MPLAB ICE 2000 In-Circuit Emulator system has been designed as a real-time emulation system with advanced features that are typically found on more expensive development tools. The PC platform and Microsoft® Windows® 32-bit operating system were chosen to best make these features available in a simple, unified application.

22.8 MPLAB REAL ICE In-Circuit Emulator System

MPLAB REAL ICE In-Circuit Emulator System is Microchip's next generation high-speed emulator for Microchip Flash DSC® and MCU devices. It debugs and programs PIC® and dsPIC® Flash microcontrollers with the easy-to-use, powerful graphical user interface of the MPLAB Integrated Development Environment (IDE), included with each kit.

The MPLAB REAL ICE probe is connected to the design engineer's PC using a high-speed USB 2.0 interface and is connected to the target with either a connector compatible with the popular MPLAB ICD 2 system (RJ11) or with the new high speed, noise tolerant, low-voltage differential signal (LVDS) interconnection (CAT5).

MPLAB REAL ICE is field upgradeable through future firmware downloads in MPLAB IDE. In upcoming releases of MPLAB IDE, new devices will be supported, and new features will be added, such as software breakpoints and assembly code trace. MPLAB REAL ICE offers significant advantages over competitive emulators including low-cost, full-speed emulation, real-time variable watches, trace analysis, complex breakpoints, a ruggedized probe interface and long (up to three meters) interconnection cables.

22.9 MPLAB ICD 2 In-Circuit Debugger

Microchip's In-Circuit Debugger, MPLAB ICD 2, is a powerful, low-cost, run-time development tool, connecting to the host PC via an RS-232 or high-speed USB interface. This tool is based on the Flash PIC MCUs and can be used to develop for these and other PIC MCUs and dsPIC DSCs. The MPLAB ICD 2 utilizes the in-circuit debugging capability built into the Flash devices. This feature, along with Microchip's In-Circuit Serial Programming™ (ICSP™) protocol, offers cost-effective, in-circuit Flash debugging from the graphical user interface of the MPLAB Integrated Development Environment. This enables a designer to develop and debug source code by setting breakpoints, single stepping and watching variables, and CPU status and peripheral registers. Running at full speed enables testing hardware and applications in real time. MPLAB ICD 2 also serves as a development programmer for selected PIC devices.

22.10 MPLAB PM3 Device Programmer

The MPLAB PM3 Device Programmer is a universal, CE compliant device programmer with programmable voltage verification at V_{DDMIN} and V_{DDMAX} for maximum reliability. It features a large LCD display (128 x 64) for menus and error messages and a modular, detachable socket assembly to support various package types. The ICSP™ cable assembly is included as a standard item. In Stand-Alone mode, the MPLAB PM3 Device Programmer can read, verify and program PIC devices without a PC connection. It can also set code protection in this mode. The MPLAB PM3 connects to the host PC via an RS-232 or USB cable. The MPLAB PM3 has high-speed communications and optimized algorithms for quick programming of large memory devices and incorporates an SD/MMC card for file storage and secure data applications.

查询"DSPIC33FJ12MC02ESP"供应商

22.11 PICSTART Plus Development Programmer

The PICSTART Plus Development Programmer is an easy-to-use, low-cost, prototype programmer. It connects to the PC via a COM (RS-232) port. MPLAB Integrated Development Environment software makes using the programmer simple and efficient. The PICSTART Plus Development Programmer supports most PIC devices in DIP packages up to 40 pins. Larger pin count devices, such as the PIC16C92X and PIC17C76X, may be supported with an adapter socket. The PICSTART Plus Development Programmer is CE compliant.

22.12 PICkit 2 Development Programmer

The PICkit™ 2 Development Programmer is a low-cost programmer and selected Flash device debugger with an easy-to-use interface for programming many of Microchip's baseline, mid-range and PIC18F families of Flash memory microcontrollers. The PICkit 2 Starter Kit includes a prototyping development board, twelve sequential lessons, software and HI-TECH's PICC™ Lite C compiler, and is designed to help get up to speed quickly using PIC® microcontrollers. The kit provides everything needed to program, evaluate and develop applications using Microchip's powerful, mid-range Flash memory family of microcontrollers.

22.13 Demonstration, Development and Evaluation Boards

A wide variety of demonstration, development and evaluation boards for various PIC MCUs and dsPIC DSCs allows quick application development on fully functional systems. Most boards include prototyping areas for adding custom circuitry and provide application firmware and source code for examination and modification.

The boards support a variety of features, including LEDs, temperature sensors, switches, speakers, RS-232 interfaces, LCD displays, potentiometers and additional EEPROM memory.

The demonstration and development boards can be used in teaching environments, for prototyping custom circuits and for learning about various microcontroller applications.

In addition to the PICDEM™ and dsPICDEM™ demonstration/development board series of circuits, Microchip has a line of evaluation kits and demonstration software for analog filter design, KEELOQ® security ICs, CAN, IrDA®, PowerSmart® battery management, SEEVAL® evaluation system, Sigma-Delta ADC, flow rate sensing, plus many more.

Check the Microchip web page (www.microchip.com) and the latest *"Product Selector Guide"* (DS00148) for the complete list of demonstration, development and evaluation kits.

 © 2007 Microchip Technology Inc.

查询"DSPIC33FJ12MC02ESP"供应商

23.0 ELECTRICAL CHARACTERISTICS

This section provides an overview of dsPIC33FJ12MC201/202 electrical characteristics. Additional information will be provided in future revisions of this document as it becomes available.

Absolute maximum ratings for the dsPIC33FJ12MC201/202 family are listed below. Exposure to these maximum rating conditions for extended periods may affect device reliability. Functional operation of the device at these or any other conditions above the parameters indicated in the operation listings of this specification is not implied.

Absolute Maximum Ratings(1)

Ambient temperature under bias ..... -40°C to +125°C
Storage temperature ..... -65°C to +150°C
Voltage on VDD with respect to VSS ..... -0.3V to +4.0V
Voltage on any combined analog and digital pin and $\overline{\text{MCLR}}$, with respect to VSS ..... -0.3V to (VDD + 0.3V)
Voltage on any digital-only pin with respect to VSS ..... -0.3V to +5.6V
Voltage on VDDCORE with respect to VSS ..... 2.25V to 2.75V
Maximum current out of VSS pin ..... 300 mA
Maximum current into VDD pin(2) ..... 250 mA
Maximum output current sunk by any I/O pin(3) ..... 4 mA
Maximum output current sourced by any I/O pin(3) ..... 4 mA
Maximum current sunk by all ports ..... 200 mA
Maximum current sourced by all ports(2) ..... 200 mA

Note 1: Stresses above those listed under “Absolute Maximum Ratings” may cause permanent damage to the device. This is a stress rating only, and functional operation of the device at those or any other conditions above those indicated in the operation listings of this specification is not implied. Exposure to maximum rating conditions for extended periods may affect device reliability.

2: Maximum allowable current is a function of device maximum power dissipation (see Table 23-2).

3: Exceptions are CLKOUT, which is able to sink/source 25 mA, and the VREF+, VREF-, SCLx, SDAx, PGCx and PGDx pins, which are able to sink/source 12 mA.

查询"DSPIC33FJ12MC02ESP"供应商

23.1 DC Characteristics

TABLE 23-1: OPERATING MIPS VS. VOLTAGE

Characteristic	V_{DD} Range (in Volts)	Temp Range (in °C)	Max MIPS
			dsPIC33FJ12MC201/202
	3.0-3.6V	-40°C to +85°C	40
	3.0-3.6V	-40°C to +125°C	35

TABLE 23-2: THERMAL OPERATING CONDITIONS

Rating	Symbol	Min	Typ	Max	Unit
Industrial Temperature Devices					
Operating Junction Temperature Range	T_J	-40	—	+125	°C
Operating Ambient Temperature Range	T_A	-40	—	+85	°C
Extended Temperature Devices					
Operating Junction Temperature Range	T_J	-40	—	+140	°C
Operating Ambient Temperature Range	T_A	-40	—	+125	°C
Power Dissipation: Internal chip power dissipation: $P_{INT} = V_{DD} \times (I_{DD} - \Sigma I_{OH})$ I/O Pin Power Dissipation: $I/O = \Sigma (\{V_{DD} - V_{OH}\} \times I_{OH}) + \Sigma (V_{OL} \times I_{OL})$	P_D	$P_{INT} + P_{I/O}$			W
Maximum Allowed Power Dissipation	P_{DMAX}	$(T_J - T_A)/\theta_{JA}$			W

TABLE 23-3: THERMAL PACKAGING CHARACTERISTICS

Characteristic	Symbol	Typ	Max	Unit	Notes
Package Thermal Resistance, 20-pin PDIP	θ_{JA}	62.4	—	°C/W	**1**
Package Thermal Resistance, 28-pin SPDIP	θ_{JA}	60	—	°C/W	**1**
Package Thermal Resistance, 20-pin SSOP	θ_{JA}	108	—	°C/W	**1**
Package Thermal Resistance, 28-pin SOIC	θ_{JA}	80.2	—	°C/W	**1**
Package Thermal Resistance, 28-pin QFN	θ_{JA}	32	—	°C/W	**1**

Note 1: Junction to ambient thermal resistance, Theta-JA (θ_{JA}) numbers are achieved by package simulations.

 © 2007 Microchip Technology Inc.

查询"DSPIC33FJ12MC02ESP"供应商

TABLE 23-4: DC TEMPERATURE AND VOLTAGE SPECIFICATIONS

DC CHARACTERISTICS			Standard Operating Conditions: 3.0V to 3.6V (unless otherwise stated) Operating temperature -40°C ≤ TA ≤ +85°C for Industrial -40°C ≤ TA ≤ +125°C for Extended				
Param No.	**Symbol**	**Characteristic**	**Min**	**Typ(1)**	**Max**	**Units**	**Conditions**
Operating Voltage							
DC10	**Supply Voltage**						
	VDD		3.0	—	3.6	V	Industrial and Extended
DC12	VDR	**RAM Data Retention Voltage(2)**	1.1	1.3	1.8	V	
DC16	VPOR	**VDD Start Voltage** to ensure internal Power-on Reset signal	—	—	VSS	V	
DC17	SVDD	**VDD Rise Rate** to ensure internal Power-on Reset signal	0.03	—	—	V/ms	0-3.0V in 0.1s
DC18	VCORE	**VDD Core(3)** Internal regulator voltage	2.25	—	2.75	V	Voltage is dependent on load, temperature and VDD

Note 1: Data in "Typ" column is at 3.3V, 25°C unless otherwise stated.

2: This is the limit to which VDD may be lowered without losing RAM data.

3: These parameters are characterized but not tested in manufacturing.

查询"DSPIC33FJ12MC02ESP"供应商

TABLE 23-5: DC CHARACTERISTICS: OPERATING CURRENT (IDD)

DC CHARACTERISTICS			Standard Operating Conditions: 3.0V to 3.6V (unless otherwise stated) Operating temperature -40°C ≤ TA ≤ +85°C for Industrial -40°C ≤ TA ≤ +125°C for Extended			
Parameter No.	**Typical(1)**	**Max**	**Units**	**Conditions**		
Operating Current (IDD)(2)						
DC20d	24	30	mA	-40°C	3.3V	10 MIPS
DC20a	27	30	mA	+25°C		
DC20b	27	30	mA	+85°C		
DC20c	27	35	mA	+125°C		
DC21d	30	40	mA	-40°C	3.3V	16 MIPS
DC21a	31	40	mA	+25°C		
DC21b	32	45	mA	+85°C		
DC21c	33	45	mA	+125°C		
DC22d	35	50	mA	-40°C	3.3V	20 MIPS
DC22a	38	50	mA	+25°C		
DC22b	38	55	mA	+85°C		
DC22c	39	55	mA	+125°C		
DC23d	47	70	mA	-40°C	3.3V	30 MIPS
DC23a	48	70	mA	+25°C		
DC23b	48	70	mA	+85°C		
DC23c	48	70	mA	+125°C		
DC24d	56	90	mA	-40°C	3.3V	40 MIPS
DC24a	56	90	mA	+25°C		
DC24b	54	90	mA	+85°C		
DC24c	54	80	mA	+125°C	3.3V	35 MIPS

Note 1: Data in “Typical” column is at 3.3V, 25°C unless otherwise stated.

2: The supply current is mainly a function of the operating voltage and frequency. Other factors, such as I/O pin loading and switching rate, oscillator type, internal code execution pattern and temperature, also have an impact on the current consumption. The test conditions for all IDD measurements are as follows: OSC1 driven with external square wave from rail to rail. All I/O pins are configured as inputs and pulled to VSS. $\overline{MCLR}$ = VDD, WDT and FSCM are disabled. CPU, SRAM, program memory and data memory are operational. No peripheral modules are operating; however, every peripheral is being clocked (PMD bits are all zeroed).

 © 2007 Microchip Technology Inc.

查询"DSPIC33FJ12MC02ESP"供应商

TABLE 23-6: DC CHARACTERISTICS: IDLE CURRENT (IIDLE)

DC CHARACTERISTICS			Standard Operating Conditions: 3.0V to 3.6V (unless otherwise stated) Operating temperature -40°C ≤ TA ≤ +85°C for Industrial -40°C ≤ TA ≤ +125°C for Extended			
Parameter No.	**Typical(1)**	**Max**	**Units**	**Conditions**		
Idle Current (IIDLE): Core OFF Clock ON Base Current(2)						
DC40d	3	25	mA	-40°C	3.3V	10 MIPS
DC40a	3	25	mA	+25°C		
DC40b	3	25	mA	+85°C		
DC40c	3	25	mA	+125°C		
DC41d	4	25	mA	-40°C	3.3V	16 MIPS
DC41a	4	25	mA	+25°C		
DC41b	5	25	mA	+85°C		
DC41c	5	25	mA	+125°C		
DC42d	6	25	mA	-40°C	3.3V	20 MIPS
DC42a	6	25	mA	+25°C		
DC42b	7	25	mA	+85°C		
DC42c	7	25	mA	+125°C		
DC43a	9	25	mA	+25°C	3.3V	30 MIPS
DC43d	9	25	mA	-40°C		
DC43b	9	25	mA	+85°C		
DC43c	9	25	mA	+125°C		
DC44d	10	25	mA	-40°C	3.3V	40 MIPS
DC44a	10	25	mA	+25°C		
DC44b	10	25	mA	+85°C		
DC44c	10	25	mA	+125°C	3.3V	35 MIPS

Note 1: Data in “Typical” column is at 3.3V, 25°C unless otherwise stated.

2: Base IIDLE current is measured with core off, clock on and all modules turned off. Peripheral Module Disable SFR registers are zeroed. All I/O pins are configured as inputs and pulled to VSS.

查询"DSPIC33FJ12MC02ESP"供应商

TABLE 23-7: DC CHARACTERISTICS: POWER-DOWN CURRENT (IPD)

DC CHARACTERISTICS			Standard Operating Conditions: 3.0V to 3.6V (unless otherwise stated) Operating temperature -40°C ≤ TA ≤ +85°C for Industrial -40°C ≤ TA ≤ +125°C for Extended			
Parameter No.	**Typical(1)**	**Max**	**Units**	**Conditions**		
Power-Down Current (IPD)(2)						
DC60d	55	500	μA	-40°C	3.3V	Base Power-Down Current(3,4)
DC60a	63	500	μA	+25°C		
DC60b	85	500	μA	+85°C		
DC60c	146	1	mA	+125°C		
DC61d	8	13	μA	-40°C	3.3V	Watchdog Timer Current: ΔIWDT(3)
DC61a	10	15	μA	+25°C		
DC61b	12	20	μA	+85°C		
DC61c	13	25	μA	+125°C		

Note 1: Data in the Typical column is at 3.3V, 25°C unless otherwise stated.

2: Base IPD is measured with all peripherals and clocks shut down. All I/Os are configured as inputs and pulled to VSS. WDT, etc., are all switched off.

3: The Δ current is the additional current consumed when the module is enabled. This current should be added to the base IPD current.

4: These currents are measured on the device containing the most memory in this family.

TABLE 23-8: DC CHARACTERISTICS: DOZE CURRENT (IDOZE)

DC CHARACTERISTICS			Standard Operating Conditions: 3.0V to 3.6V (unless otherwise stated) Operating temperature -40°C ≤ TA ≤ +85°C for Industrial -40°C ≤ TA ≤ +125°C for Extended				
Parameter No.	**Typical(1)**	**Max**	**Doze Ratio**	**Units**	**Conditions**		
DC73a	11	35	1:2	mA	-40°C	3.3V	40 MIPS
DC73f	11	30	1:64	mA			
DC73g	11	30	1:128	mA			
DC70a	11	50	1:2	mA	+25°C	3.3V	40 MIPS
DC70f	11	30	1:64	mA			
DC70g	11	30	1:128	mA			
DC71a	12	50	1:2	mA	+85°C	3.3V	40 MIPS
DC71f	12	30	1:64	mA			
DC71g	12	30	1:128	mA			
DC72a	12	50	1:2	mA	+125°C	3.3V	35 MIPS
DC72f	12	30	1:64	mA			
DC72g	12	30	1:128	mA			

Note 1: Data in the Typical column is at 3.3V, 25°C unless otherwise stated.

 © 2007 Microchip Technology Inc.

查询"DSPIC33FJ12MC02ESP"供应商

TABLE 23-9: DC CHARACTERISTICS: I/O PIN INPUT SPECIFICATIONS

DC CHARACTERISTICS			Standard Operating Conditions: 3.0V to 3.6V (unless otherwise stated) Operating temperature -40°C ≤ TA ≤ +85°C for Industrial -40°C ≤ TA ≤ +125°C for Extended				
Param No.	**Symbol**	**Characteristic**	**Min**	**Typ(1)**	**Max**	**Units**	**Conditions**
	VIL	**Input Low Voltage**					
DI10		I/O pins	VSS	—	0.2 VDD	V	
DI15		$\overline{\text{MCLR}}$	VSS	—	0.2 VDD	V	
DI16		OSC1 (XT mode)	VSS	—	0.2 VDD	V	
DI17		OSC1 (HS mode)	VSS	—	0.2 VDD	V	
DI18		SDAx, SCLx	VSS	—	0.3 VDD	V	SMbus disabled
DI19		SDAx, SCLx	VSS	—	0.2 VDD	V	SMbus enabled
	VIH	**Input High Voltage**					
DI20		I/O pins:					
		with analog functions	0.8 VDD	—	VDD	V	
		digital-only	0.8 VDD	—	5.5	V	
DI25		$\overline{\text{MCLR}}$	0.8 VDD	—	VDD	V	
DI26		OSC1 (XT mode)	0.7 VDD	—	VDD	V	
DI27		OSC1 (HS mode)	0.7 VDD	—	VDD	V	
DI28		SDAx, SCLx	0.7 VDD	—	VDD	V	SMbus disabled
DI29		SDAx, SCLx	0.8 VDD	—	VDD	V	SMbus enabled
	ICNPU	**CNx Pull-up Current**					
DI30			50	250	400	μA	VDD = 3.3V, VPIN = VSS
	IIL	**Input Leakage Current(2)(3)**					
DI50		I/O ports	—	—	±2	μA	VSS ≤ VPIN ≤ VDD, Pin at high-impedance
DI51		Analog Input Pins	—	—	±1	μA	VSS ≤ VPIN ≤ VDD, Pin at high-impedance, 40°C ≤ TA ≤ +85°C
DI51a		Analog Input Pins	—	—	±2	μA	Analog pins shared with external reference pins, 40°C ≤ TA ≤ +85°C
DI51b		Analog Input Pins	—	—	±3.5	μA	VSS ≤ VPIN ≤ VDD, Pin at high-impedance, -40°C ≤ TA ≤ +125°C
DI51c		Analog Input Pins	—	—	±8	μA	Analog pins shared with external reference pins, -40°C ≤ TA ≤ +125°C
DI55		$\overline{\text{MCLR}}$	—	—	±2	μA	VSS ≤ VPIN ≤ VDD
DI56		OSC1	—	—	±2	μA	VSS ≤ VPIN ≤ VDD, XT and HS modes

Note 1: Data in "Typ" column is at 3.3V, 25°C unless otherwise stated.

2: The leakage current on the $\overline{\text{MCLR}}$ pin is strongly dependent on the applied voltage level. The specified levels represent normal operating conditions. Higher leakage current may be measured at different input voltages.

3: Negative current is defined as current sourced by the pin.

查询"DSPIC33FJ12MC02ESP"供应商

TABLE 23-10: DC CHARACTERISTICS: I/O PIN OUTPUT SPECIFICATIONS

DC CHARACTERISTICS			Standard Operating Conditions: 3.0V to 3.6V (unless otherwise stated) Operating temperature -40°C ≤ TA ≤ +85°C for Industrial -40°C ≤ TA ≤ +125°C for Extended				
Param No.	**Symbol**	**Characteristic**	**Min**	**Typ**	**Max**	**Units**	**Conditions**
	VOL	**Output Low Voltage**					
DO10		I/O ports	—	—	0.4	V	IOL = 2 mA, VDD = 3.3V
DO16		OSC2/CLKO	—	—	0.4	V	IOL = 2 mA, VDD = 3.3V
	VOH	**Output High Voltage**					
DO20		I/O ports	2.40	—	—	V	IOH = -2.3 mA, VDD = 3.3V
DO26		OSC2/CLKO	2.41	—	—	V	IOH = -1.3 mA, VDD = 3.3V

TABLE 23-11: ELECTRICAL CHARACTERISTICS: BOR

DC CHARACTERISTICS			Standard Operating Conditions: 3.0V to 3.6V (unless otherwise stated) Operating temperature -40°C ≤ TA ≤ +85°C for Industrial -40°C ≤ TA ≤ +125°C for Extended				
Param No.	**Symbol**	**Characteristic**	**Min(1)**	**Typ**	**Max(1)**	**Units**	**Conditions**
BO10	VBOR	BOR Event on VDD transition high-to-low BOR event is tied to VDD core voltage decrease	2.40	—	2.55	V	

Note 1: Parameters are for design guidance only and are not tested in manufacturing.

 © 2007 Microchip Technology Inc.

查询"DSPIC33FJ12MC02ESP"供应商

TABLE 23-12: DC CHARACTERISTICS: PROGRAM MEMORY

DC CHARACTERISTICS			Standard Operating Conditions: 3.0V to 3.6V (unless otherwise stated) Operating temperature -40°C ≤ TA ≤ +85°C for Industrial -40°C ≤ TA ≤ +125°C for Extended				
Param No.	**Symbol**	**Characteristic**	**Min**	**Typ(1)**	**Max**	**Units**	**Conditions**
		Program Flash Memory					
D130a	EP	Cell Endurance	10,000	—	—	E/W	-40°C to +125°C
D131	VPR	VDD for Read	VMIN	—	3.6	V	VMIN = Minimum operating voltage
D132B	VPEW	VDD for Self-Timed Write	VMIN	—	3.6	V	VMIN = Minimum operating voltage
D134	TRETD	Characteristic Retention	20	—	—	Year	Provided no other specifications are violated
D135	IDDP	Supply Current during Programming	—	10	—	mA	
D136	TRW	Row Write Time	—	1.6	—	ms	
D137	TPE	Page Erase Time	—	20	—	ms	
D138	TWW	Word Write Cycle Time	20	—	40	μs	

Note 1: Data in “Typ” column is at 3.3V, 25°C unless otherwise stated.

TABLE 23-13: INTERNAL VOLTAGE REGULATOR SPECIFICATIONS

Operating Conditions: -40°C < TA < +85°C (unless otherwise stated)							
Param No.	**Symbol**	**Characteristics**	**Min**	**Typ**	**Max**	**Units**	**Comments**
	CEFC	External Filter Capacitor Value	1	10	—	μF	Capacitor must be low series resistance (< 5 ohms)

查询"DSPIC33FJ12MC02ESP"供应商

23.2 AC Characteristics and Timing Parameters

This section defines dsPIC33FJ12MC201/202 AC characteristics and timing parameters.

TABLE 23-14: TEMPERATURE AND VOLTAGE SPECIFICATIONS – AC

AC CHARACTERISTICS	**Standard Operating Conditions: 3.0V to 3.6V (unless otherwise stated)** Operating temperature -40°C ≤ TA ≤ +85°C for Industrial -40°C ≤ TA ≤ +125°C for Extended Operating voltage VDD range as described in **Section 23.0 "Electrical Characteristics"**.

FIGURE 23-1: LOAD CONDITIONS FOR DEVICE TIMING SPECIFICATIONS

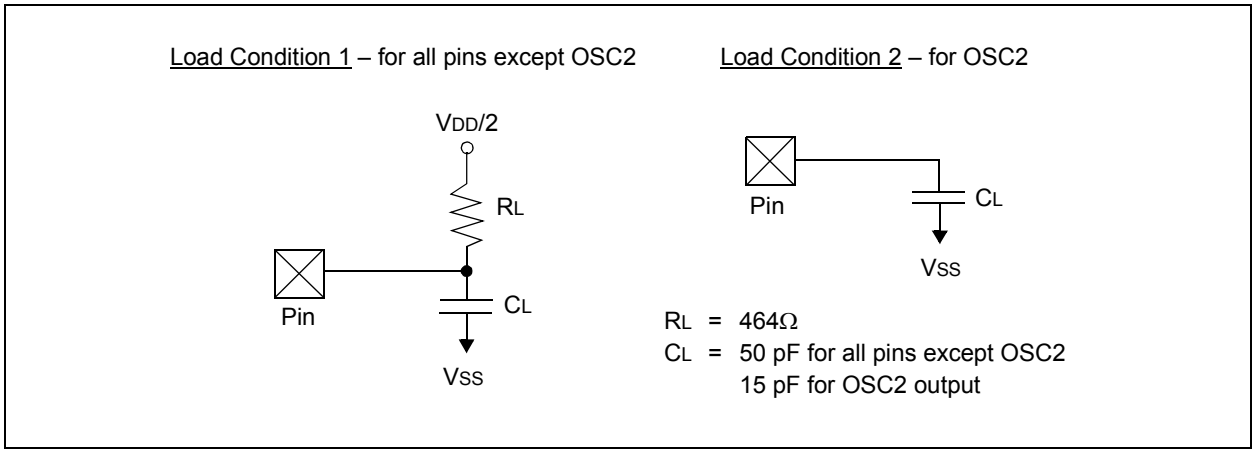

TABLE 23-15: CAPACITIVE LOADING REQUIREMENTS ON OUTPUT PINS

Param No.	Symbol	Characteristic	Min	Typ	Max	Units	Conditions
DO50	COSC2	OSC2/SOSC2 pin	—	—	15	pF	In XT and HS modes when external clock is used to drive OSC1
DO56	CIO	All I/O pins and OSC2	—	—	50	pF	EC mode
DO58	CB	SCLx, SDAx	—	—	400	pF	In I²C™ mode

 © 2007 Microchip Technology Inc.

查询"DSPIC33FJ12MC02ESP"供应商

FIGURE 23-2: EXTERNAL CLOCK TIMING

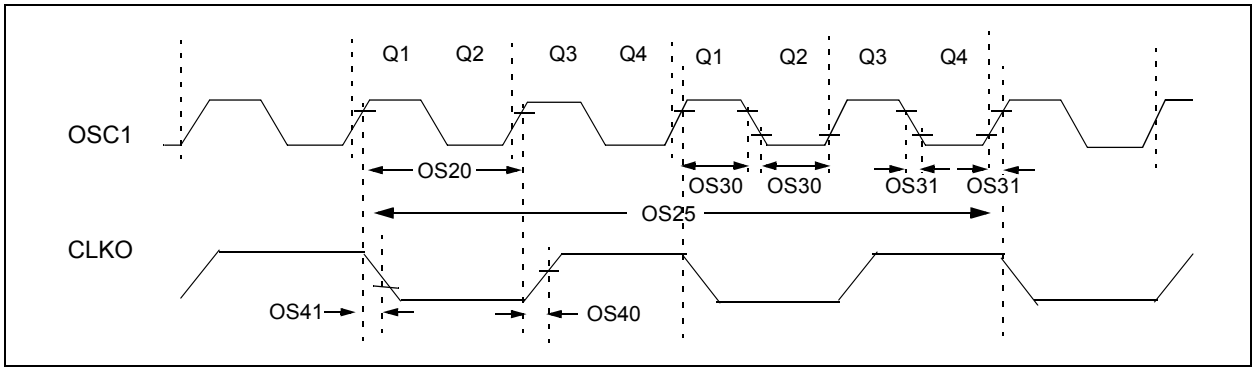

TABLE 23-16: EXTERNAL CLOCK TIMING REQUIREMENTS

AC CHARACTERISTICS			Standard Operating Conditions: 3.0V to 3.6V (unless otherwise stated) Operating temperature -40°C ≤ TA ≤ +85°C for Industrial -40°C ≤ TA ≤ +125°C for Extended				
Param No.	**Symb**	**Characteristic**	**Min**	**Typ(1)**	**Max**	**Units**	**Conditions**
OS10	FIN	External CLKI Frequency (External clocks allowed only in EC and ECPLL modes)	DC	—	40	MHz	EC
		Oscillator Crystal Frequency	3.5 10 —	— — —	10 40 33	MHz MHz kHz	XT HS SOSC
OS20	TOSC	TOSC = 1/FOSC	12.5	—	DC	ns	
OS25	TCY	Instruction Cycle Time(2)	25	—	DC	ns	
OS30	TosL, TosH	External Clock in (OSC1) High or Low Time	0.375 x TOSC	—	0.625 x TOSC	ns	EC
OS31	TosR, TosF	External Clock in (OSC1) Rise or Fall Time	—	—	20	ns	EC
OS40	TckR	CLKO Rise Time(3)	—	5.2	—	ns	
OS41	TckF	CLKO Fall Time(3)	—	5.2	—	ns	

Note 1: Data in “Typ” column is at 3.3V, 25°C unless otherwise stated.

2: Instruction cycle period (TCY) equals two times the input oscillator time-base period. All specified values are based on characterization data for that particular oscillator type under standard operating conditions with the device executing code. Exceeding these specified limits may result in an unstable oscillator operation and/or higher than expected current consumption. All devices are tested to operate at “min.” values with an external clock applied to the OSC1/CLKI pin. When an external clock input is used, the “max.” cycle time limit is “DC” (no clock) for all devices.

3: Measurements are taken in EC mode. The CLKO signal is measured on the OSC2 pin.

查询"DSPIC33FJ12MC02ESP"供应商

TABLE 23-17: PLL CLOCK TIMING SPECIFICATIONS (V_{DD} = 3.0V TO 3.6V)

AC CHARACTERISTICS			Standard Operating Conditions: 3.0V to 3.6V (unless otherwise stated) Operating temperature -40°C ≤ TA ≤ +85°C for Industrial -40°C ≤ TA ≤ +125°C for Extended				
Param No.	**Symbol**	**Characteristic**	**Min**	**Typ(1)**	**Max**	**Units**	**Conditions**
OS50	FPLLI	PLL Voltage Controlled Oscillator (VCO) Input Frequency Range	0.8	—	8	MHz	ECPLL and XTPLL modes
OS51	FSYS	On-Chip VCO System Frequency	100	—	200	MHz	
OS52	TLOCK	PLL Start-up Time (Lock Time)	0.9	1.5	3.1	mS	
OS53	DCLK	CLKO Stability (Jitter)	-3	0.5	3	%	Measured over 100 ms period

Note 1: Data in “Typ” column is at 3.3V, 25°C unless otherwise stated. Parameters are for design guidance only and are not tested.

TABLE 23-18: AC CHARACTERISTICS: INTERNAL RC ACCURACY

AC CHARACTERISTICS		Standard Operating Conditions: 3.0V to 3.6V (unless otherwise stated) Operating temperature -40°C ≤ TA ≤ +85°C for Industrial -40°C ≤ TA ≤ +125°C for Extended					
Param No.	**Characteristic**	**Min**	**Typ**	**Max**	**Units**	**Conditions**	
	Internal FRC Accuracy @ 7.3728 MHz(1,2)						
F20	FRC	-2	—	+2	%	-40°C ≤ TA ≤ +85°C	VDD = 3.0-3.6V
	FRC	-5	—	+5	%	-40°C ≤ TA ≤ +125°C	VDD = 3.0-3.6V

Note 1: Frequency calibrated at 25°C and 3.3V. TUN bits may be used to compensate for temperature drift.

2: FRC is set to initial frequency of 7.37 MHz (±2%) at 25°C.

TABLE 23-19: INTERNAL RC ACCURACY

AC CHARACTERISTICS		Standard Operating Conditions: 3.0V to 3.6V (unless otherwise stated) Operating temperature -40°C ≤ TA ≤ +85°C for Industrial -40°C ≤ TA ≤ +125°C for Extended					
Param No.	**Characteristic**	**Min**	**Typ**	**Max**	**Units**	**Conditions**	
	LPRC @ 32.768 kHz(1)						
F21	LPRC	-20	±6	+20	%	-40°C ≤ TA ≤ +85°C	VDD = 3.0-3.6V
	LPRC	-70	—	+20	%	-40°C ≤ TA ≤ +125°C	VDD = 3.0-3.6V

Note 1: Change of LPRC frequency as VDD changes.

 © 2007 Microchip Technology Inc.

查询"DSPIC33FJ12MC02ESP"供应商

FIGURE 23-3: CLKO AND I/O TIMING CHARACTERISTICS

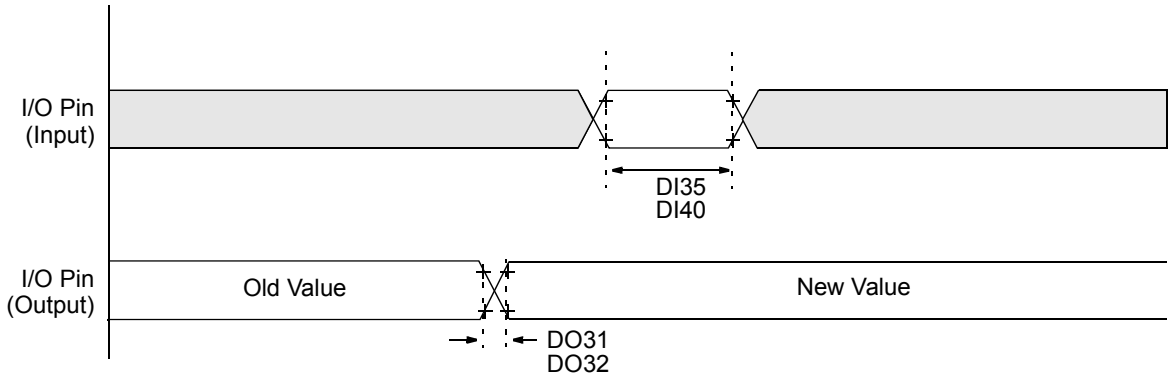

Note: Refer to Figure 23-1 for load conditions.

TABLE 23-20: I/O TIMING REQUIREMENTS

AC CHARACTERISTICS			Standard Operating Conditions: 3.0V to 3.6V (unless otherwise stated) Operating temperature -40°C ≤ TA ≤ +85°C for Industrial -40°C ≤ TA ≤ +125°C for Extended				
Param No.	**Symbol**	**Characteristic**	**Min**	**Typ(1)**	**Max**	**Units**	**Conditions**
DO31	TIOR	Port Output Rise Time	—	10	25	ns	—
DO32	TIOF	Port Output Fall Time	—	10	25	ns	—
DI35	TINP	INTx Pin High or Low Time (output)	20	—	—	ns	—
DI40	TRBP	CNx High or Low Time (input)	2	—	—	TCY	—

Note 1: Data in “Typ” column is at 3.3V, 25°C unless otherwise stated.

查询"DSPIC33FJ12MC02ESP"供应商

FIGURE 23-4: RESET, WATCHDOG TIMER, OSCILLATOR START-UP TIMER AND POWER-UP TIMER TIMING CHARACTERISTICS

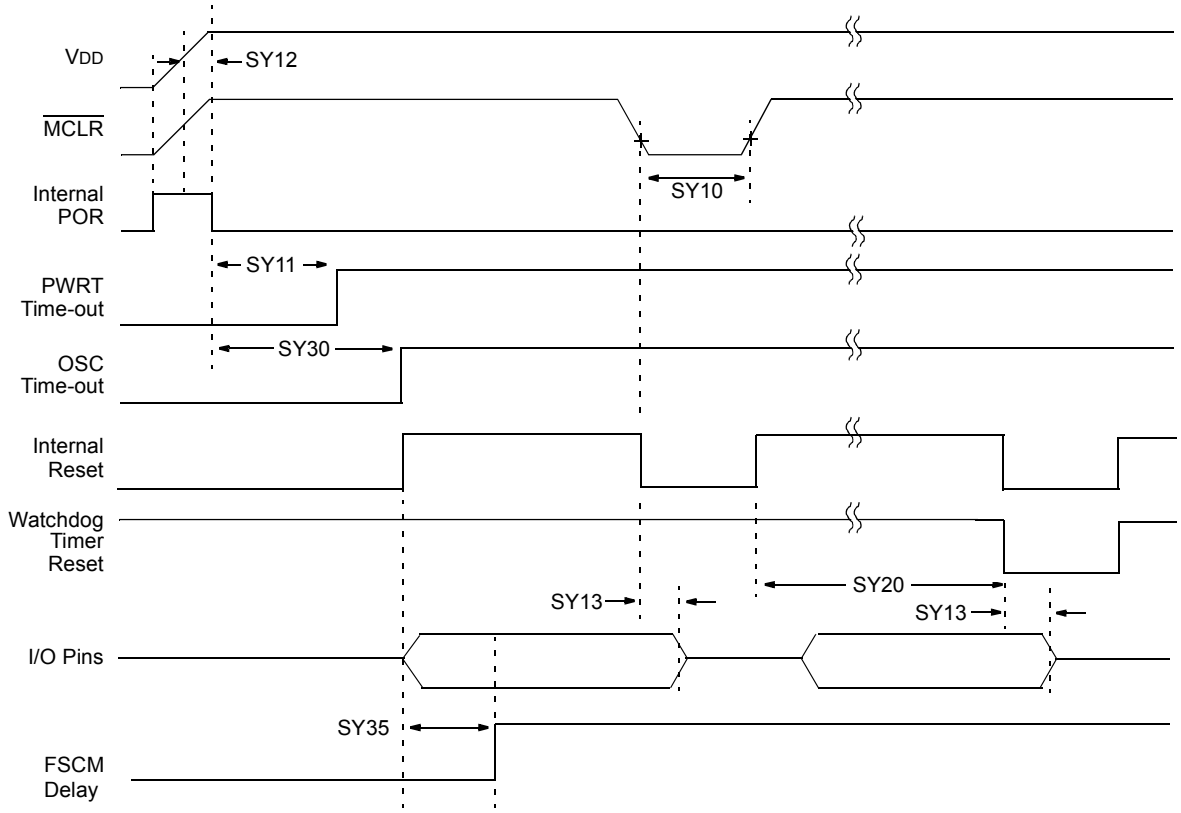

Note: Refer to Figure 23-1 for load conditions.

 © 2007 Microchip Technology Inc.

查询"DSPIC33FJ12MC02ESP"供应商

TABLE 23-21: RESET, WATCHDOG TIMER, OSCILLATOR START-UP TIMER, POWER-UP TIMER TIMING REQUIREMENTS

AC CHARACTERISTICS			Standard Operating Conditions: 3.0V to 3.6V (unless otherwise stated) Operating temperature -40°C ≤ TA ≤ +85°C for Industrial -40°C ≤ TA ≤ +125°C for Extended				
Param No.	**Symbol**	**Characteristic(1)**	**Min**	**Typ(2)**	**Max**	**Units**	**Conditions**
SY10	TMCL	$\overline{\text{MCLR}}$ Pulse Width (low)	2	—	—	μs	-40°C to +85°C
SY11	TPWRT	Power-up Timer Period	—	2 4 8 16 32 64 128	—	ms	-40°C to +85°C User programmable
SY12	TPOR	Power-on Reset Delay	3	10	30	μs	-40°C to +85°C
SY13	TIOZ	I/O High-Impedance from $\overline{\text{MCLR}}$ Low or Watchdog Timer Reset	0.68	0.72	1.2	μs	
SY20	TWDT1	Watchdog Timer Time-out Period (No Prescaler)	1.7	2.1	2.6	ms	VDD = 3V, -40°C to +85°C
SY30	TOST	Oscillator Start-up Time	—	1024 TOSC	—	—	TOSC = OSC1 period
SY35	TFSCM	Fail-Safe Clock Monitor Delay	—	500	900	μs	-40°C to +85°C

Note 1: These parameters are characterized but not tested in manufacturing.
2: Data in “Typ” column is at 3.3V, 25°C unless otherwise stated.

查询"DSPIC33FJ12MC02ESP"供应商

FIGURE 23-5: TIMER1, 2 AND 3 EXTERNAL CLOCK TIMING CHARACTERISTICS

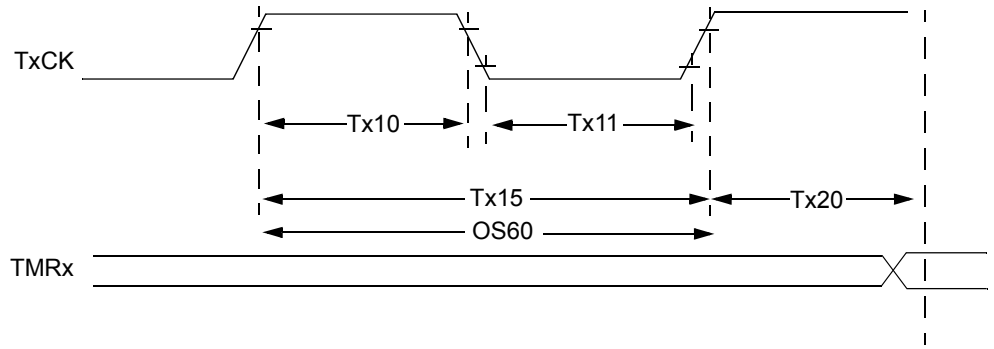

Note: Refer to Figure 23-1 for load conditions.

TABLE 23-22: TIMER1 EXTERNAL CLOCK TIMING REQUIREMENTS(1)

AC CHARACTERISTICS				Standard Operating Conditions: 3.0V to 3.6V (unless otherwise stated) Operating temperature -40°C ≤ TA ≤ +85°C for Industrial -40°C ≤ TA ≤ +125°C for Extended				
Param No.	**Symbol**	**Characteristic**		**Min**	**Typ**	**Max**	**Units**	**Conditions**
TA10	TTXH	TxCK High Time	Synchronous, no prescaler	0.5 TCY + 20	—	—	ns	Must also meet parameter TA15
			Synchronous, with prescaler	10	—	—	ns	
			Asynchronous	10	—	—	ns	
TA11	TTXL	TxCK Low Time	Synchronous, no prescaler	0.5 TCY + 20	—	—	ns	Must also meet parameter TA15
			Synchronous, with prescaler	10	—	—	ns	
			Asynchronous	10	—	—	ns	
TA15	TTXP	TxCK Input Period	Synchronous, no prescaler	TCY + 40	—	—	ns	
			Synchronous, with prescaler	Greater of: 20 ns or (TCY + 40)/N	—	—	—	N = prescale value (1, 8, 64, 256)
			Asynchronous	20	—	—	ns	
OS60	Ft1	SOSC1/T1CK Oscillator Input frequency Range (oscillator enabled by setting bit TCS (T1CON<1>))		DC	—	50	kHz	
TA20	TCKEXTMRL	Delay from External TxCK Clock Edge to Timer Increment		0.5 TCY		1.5 TCY	—	

Note 1: Timer1 is a Type A.

 © 2007 Microchip Technology Inc.

查询"DSPIC33FJ12MC02ESP"供应商

TABLE 23-23: TIMER2 EXTERNAL CLOCK TIMING REQUIREMENTS

AC CHARACTERISTICS				Standard Operating Conditions: 3.0V to 3.6V (unless otherwise stated) Operating temperature -40°C ≤ TA ≤ +85°C for Industrial -40°C ≤ TA ≤ +125°C for Extended				
Param No.	**Symbol**	**Characteristic**		**Min**	**Typ**	**Max**	**Units**	**Conditions**
TB10	TtxH	TxCK High Time	Synchronous, no prescaler	0.5 TCY + 20	—	—	ns	Must also meet parameter TB15
			Synchronous, with prescaler	10	—	—	ns	
TB11	TtxL	TxCK Low Time	Synchronous, no prescaler	0.5 TCY + 20	—	—	ns	Must also meet parameter TB15
			Synchronous, with prescaler	10	—	—	ns	
TB15	TtxP	TxCK Input Period	Synchronous, no prescaler	TCY + 40	—	—	ns	N = prescale value (1, 8, 64, 256)
			Synchronous, with prescaler	Greater of: 20 ns or (TCY + 40)/N				
TB20	TCKEXT-MRL	Delay from External TxCK Clock Edge to Timer Increment		0.5 TCY	—	1.5 TCY	—	

TABLE 23-24: TIMER3 EXTERNAL CLOCK TIMING REQUIREMENTS

AC CHARACTERISTICS				Standard Operating Conditions: 3.0V to 3.6V (unless otherwise stated) Operating temperature -40°C ≤ TA ≤ +85°C for Industrial -40°C ≤ TA ≤ +125°C for Extended				
Param No.	**Symbol**	**Characteristic**		**Min**	**Typ**	**Max**	**Units**	**Conditions**
TC10	TtxH	TxCK High Time	Synchronous	0.5 TCY + 20	—	—	ns	Must also meet parameter TC15
TC11	TtxL	TxCK Low Time	Synchronous	0.5 TCY + 20	—	—	ns	Must also meet parameter TC15
TC15	TtxP	TxCK Input Period	Synchronous, no prescaler	TCY + 40	—	—	ns	N = prescale value (1, 8, 64, 256)
			Synchronous, with prescaler	Greater of: 20 ns or (TCY + 40)/N				
TC20	TCKEXTMRL	Delay from External TxCK Clock Edge to Timer Increment		0.5 TCY	—	1.5 TCY	—	

查询"DSPIC33FJ12MC02ESP"供应商

FIGURE 23-6: TIMERQ (QEI MODULE) EXTERNAL CLOCK TIMING CHARACTERISTICS

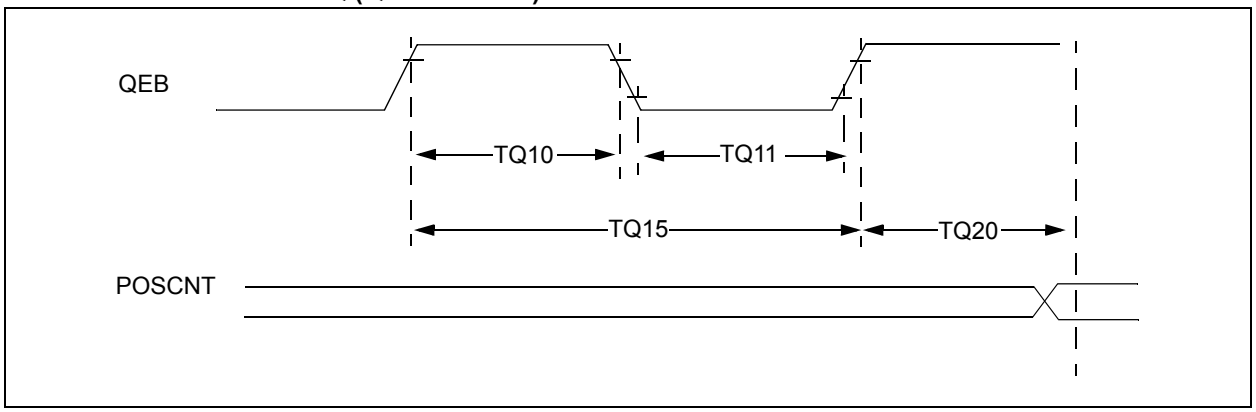

TABLE 23-25: QEI MODULE EXTERNAL CLOCK TIMING REQUIREMENTS

AC CHARACTERISTICS				Standard Operating Conditions: 3.0V to 3.6V (unless otherwise stated) Operating temperature -40°C ≤ TA ≤ +85°C for Industrial -40°C ≤ TA ≤ +125°C for Extended				
Param No.	**Symbol**	**Characteristic(1)**		**Min**	**Typ**	**Max**	**Units**	**Conditions**
TQ10	TtQH	TQCK High Time	Synchronous, with prescaler	TCY + 20		—	ns	Must also meet parameter TQ15
TQ11	TtQL	TQCK Low Time	Synchronous, with prescaler	TCY + 20		—	ns	Must also meet parameter TQ15
TQ15	TtQP	TQCP Input Period	Synchronous, with prescaler	2 * TCY + 40		—	ns	—
TQ20	TCKEXTMRL	Delay from External TxCK Clock Edge to Timer Increment		0.5 TCY		1.5 TCY	—	—

Note 1: These parameters are characterized but not tested in manufacturing.

 © 2007 Microchip Technology Inc.

查询"DSPIC33FJ12MC02ESP"供应商

FIGURE 23-7: INPUT CAPTURE (CAPx) TIMING CHARACTERISTICS

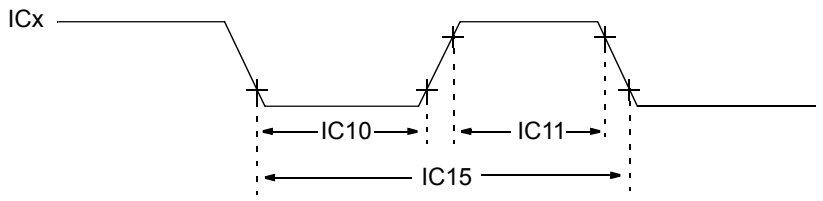

Note: Refer to Figure 23-1 for load conditions.

TABLE 23-26: INPUT CAPTURE TIMING REQUIREMENTS

AC CHARACTERISTICS				Standard Operating Conditions: 3.0V to 3.6V (unless otherwise stated) Operating temperature -40°C ≤ TA ≤ +85°C for Industrial -40°C ≤ TA ≤ +125°C for Extended			
Param No.	**Symbol**	**Characteristic(1)**		**Min**	**Max**	**Units**	**Conditions**
IC10	TccL	ICx Input Low Time	No Prescaler	0.5 TCY + 20	—	ns	
			With Prescaler	10	—	ns	
IC11	TccH	ICx Input High Time	No Prescaler	0.5 TCY + 20	—	ns	
			With Prescaler	10	—	ns	
IC15	TccP	ICx Input Period		(TCY + 40)/N	—	ns	N = prescale value (1, 4, 16)

Note 1: These parameters are characterized but not tested in manufacturing.

FIGURE 23-8: OUTPUT COMPARE MODULE (OCx) TIMING CHARACTERISTICS

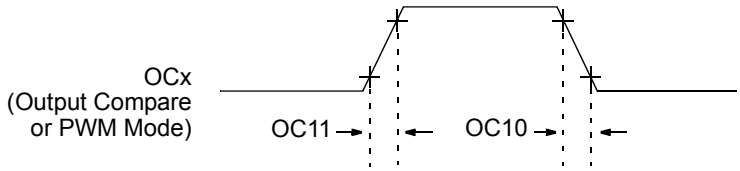

Note: Refer to Figure 23-1 for load conditions.

TABLE 23-27: OUTPUT COMPARE MODULE TIMING REQUIREMENTS

AC CHARACTERISTICS			Standard Operating Conditions: 3.0V to 3.6V (unless otherwise stated) Operating temperature -40°C ≤ TA ≤ +85°C for Industrial -40°C ≤ TA ≤ +125°C for Extended				
Param No.	**Symbol**	**Characteristic(1)**	**Min**	**Typ**	**Max**	**Units**	**Conditions**
OC10	TccF	OCx Output Fall Time	—	—	—	ns	See parameter D032
OC11	TccR	OCx Output Rise Time	—	—	—	ns	See parameter D031

Note 1: These parameters are characterized but not tested in manufacturing.

查询"DSPIC33FJ12MC02ESP"供应商

FIGURE 23-9: OC/PWM MODULE TIMING CHARACTERISTICS

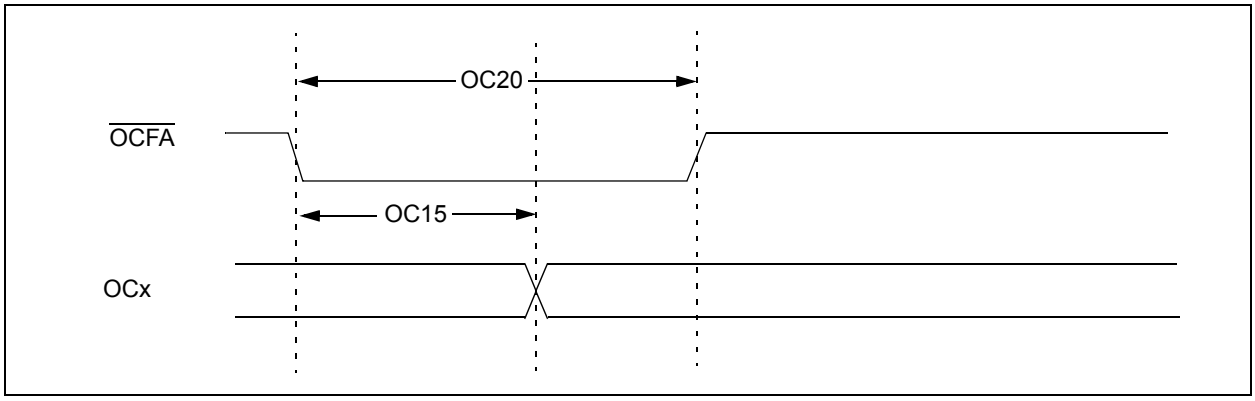

TABLE 23-28: SIMPLE OC/PWM MODE TIMING REQUIREMENTS

AC CHARACTERISTICS			Standard Operating Conditions: 3.0V to 3.6V (unless otherwise stated) Operating temperature -40°C ≤ TA ≤ +85°C for Industrial -40°C ≤ TA ≤ +125°C for Extended				
Param No.	**Symbol**	**Characteristic(1)**	**Min**	**Typ**	**Max**	**Units**	**Conditions**
OC15	TFD	Fault Input to PWM I/O Change	—	—	50	ns	—
OC20	TFLT	Fault Input Pulse Width	50	—	—	ns	—

Note 1: These parameters are characterized but not tested in manufacturing.

 © 2007 Microchip Technology Inc.

查询"DSPIC33FJ12MC02ESP"供应商

FIGURE 23-10: MOTOR CONTROL PWM MODULE FAULT TIMING CHARACTERISTICS

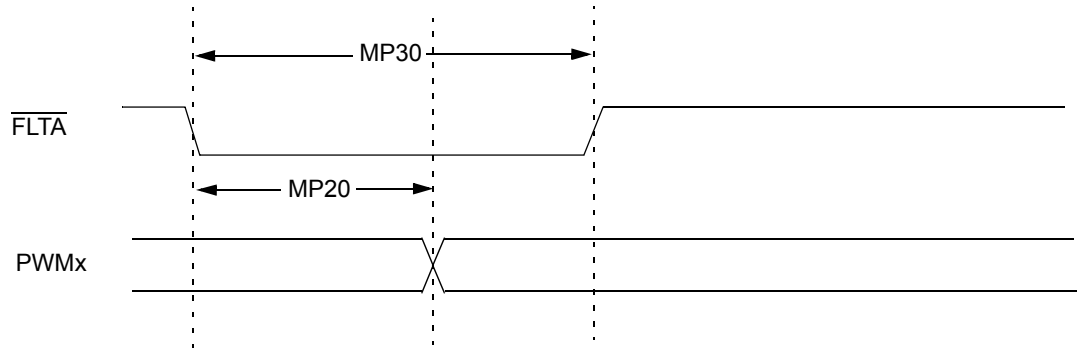

FIGURE 23-11: MOTOR CONTROL PWM MODULE TIMING CHARACTERISTICS

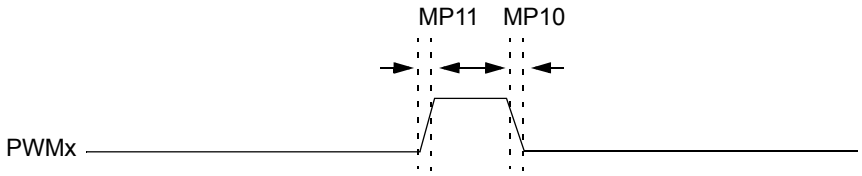

Note: Refer to Figure 23-1 for load conditions.

TABLE 23-29: MOTOR CONTROL PWM MODULE TIMING REQUIREMENTS

AC CHARACTERISTICS			Standard Operating Conditions: 3.0V to 3.6V (unless otherwise stated) Operating temperature -40°C ≤ TA ≤ +85°C for Industrial -40°C ≤ TA ≤ +125°C for Extended				
Param No.	**Symbol**	**Characteristic(1)**	**Min**	**Typ**	**Max**	**Units**	**Conditions**
MP10	TFPWM	PWM Output Fall Time	—	—	—	ns	See parameter D032
MP11	TRPWM	PWM Output Rise Time	—	—	—	ns	See parameter D031
MP20	TFD	Fault Input ↓ to PWM I/O Change	—	—	50	ns	—
MP30	TFH	Minimum Pulse Width	50	—	—	ns	—

Note 1: These parameters are characterized but not tested in manufacturing.

查询"DSPIC33FJ12MC02ESP"供应商

FIGURE 23-12: QEA/QEB INPUT CHARACTERISTICS

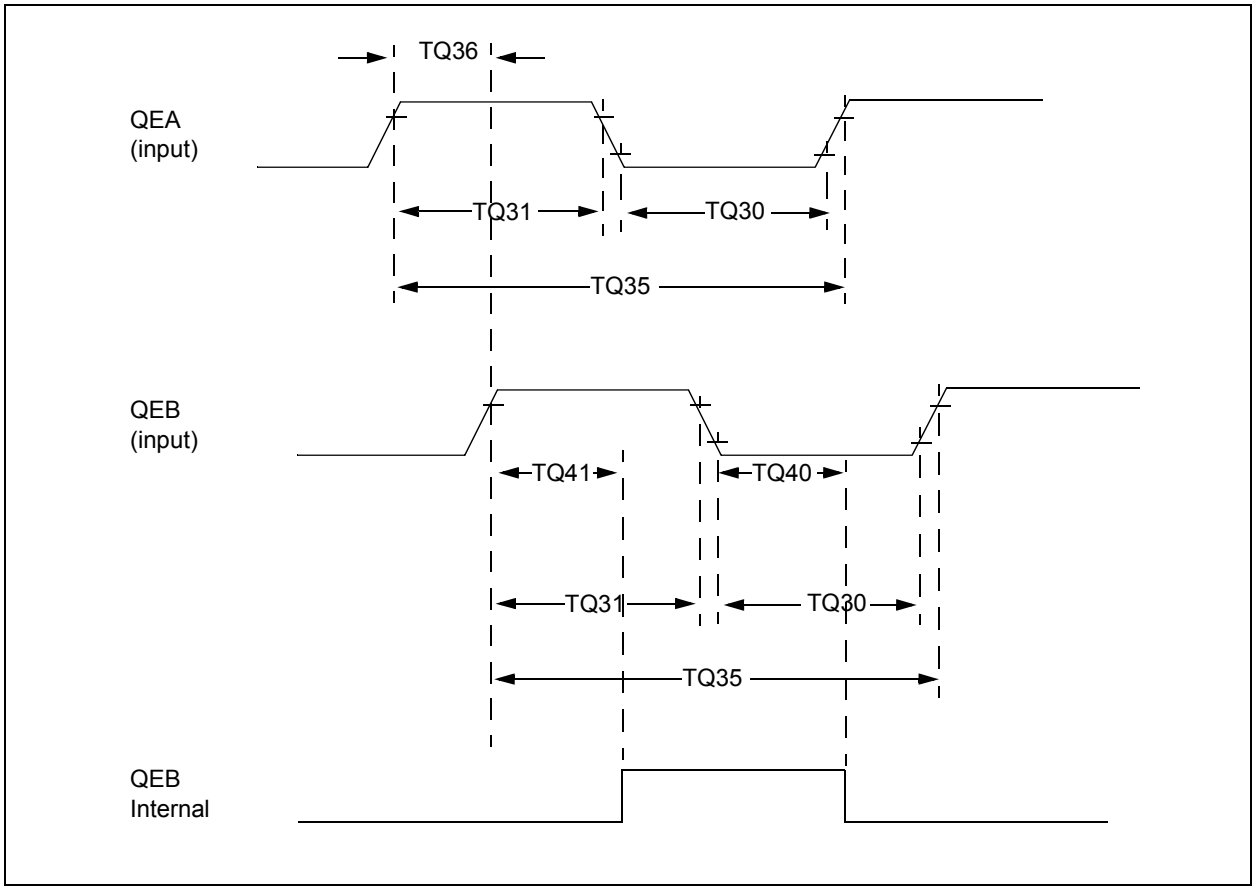

TABLE 23-30: QUADRATURE DECODER TIMING REQUIREMENTS

AC CHARACTERISTICS			Standard Operating Conditions: 3.0V to 3.6V (unless otherwise stated) Operating temperature -40°C ≤ TA ≤ +85°C for Industrial -40°C ≤ TA ≤ +125°C for Extended			
Param No.	**Symbol**	**Characteristic(1)**	**Typ(2)**	**Max**	**Units**	**Conditions**
TQ30	TQUL	Quadrature Input Low Time	6 TCY	—	ns	—
TQ31	TQUH	Quadrature Input High Time	6 TCY	—	ns	—
TQ35	TQUIN	Quadrature Input Period	12 TCY	—	ns	—
TQ36	TQUP	Quadrature Phase Period	3 TCY	—	ns	—
TQ40	TQUFL	Filter Time to Recognize Low, with Digital Filter	3 * N * TCY	—	ns	N = 1, 2, 4, 16, 32, 64, 128 and 256 **(Note 3)**
TQ41	TQUFH	Filter Time to Recognize High, with Digital Filter	3 * N * TCY	—	ns	N = 1, 2, 4, 16, 32, 64, 128 and 256 **(Note 3)**

Note 1: These parameters are characterized but not tested in manufacturing.

2: Data in "Typ" column is at 3.3V, 25°C unless otherwise stated. Parameters are for design guidance only and are not tested.

3: N = Index Channel Digital Filter Clock Divide Select bits. Refer to **Section 15. "Quadrature Encoder Interface (QEI)"** in the "*dsPIC33F Family Reference Manual*". Please see the Microchip (www.microchip.com) web site for the latest dsPIC33F Family Reference Manual chapters.

 © 2007 Microchip Technology Inc.

查询"DSPIC33FJ12MC02ESP"供应商

FIGURE 23-13: QEI MODULE INDEX PULSE TIMING CHARACTERISTICS

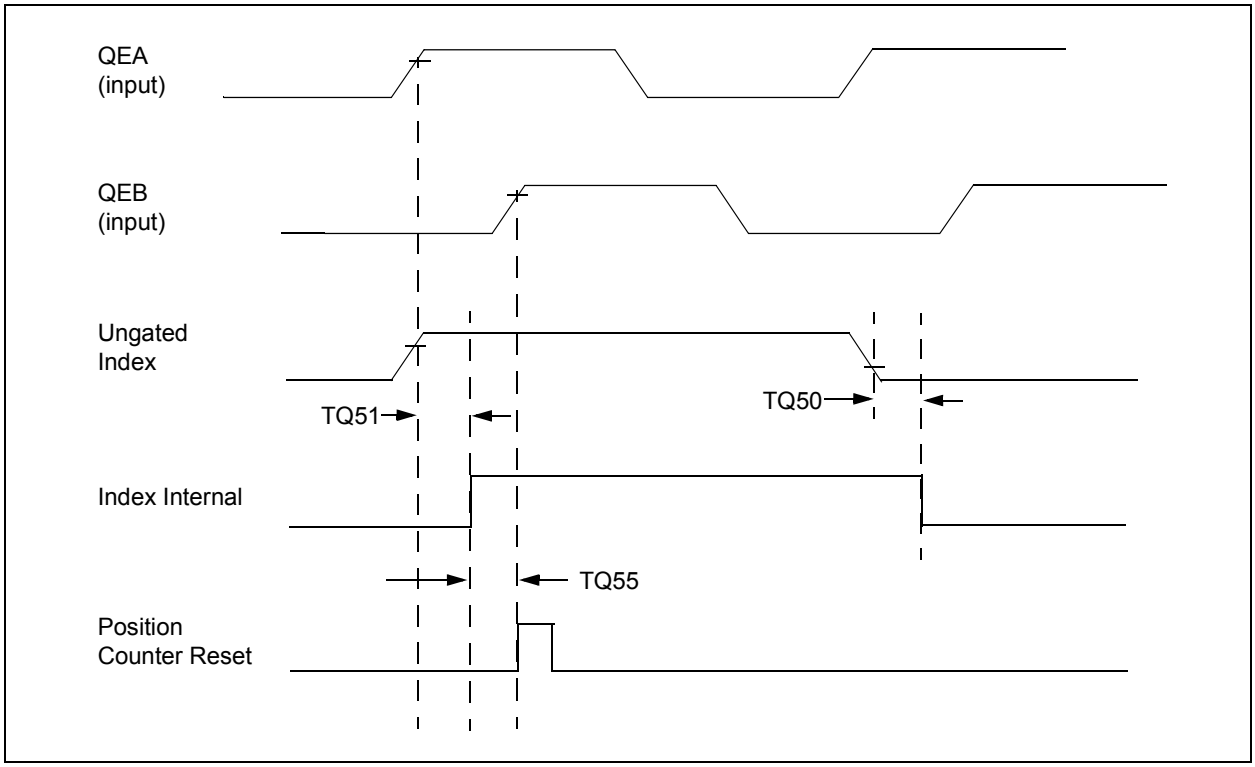

TABLE 23-31: QEI INDEX PULSE TIMING REQUIREMENTS

AC CHARACTERISTICS			Standard Operating Conditions: 3.0V to 3.6V (unless otherwise stated) Operating temperature -40°C ≤ TA ≤ +85°C for Industrial -40°C ≤ TA ≤ +125°C for Extended			
Param No.	**Symbol**	**Characteristic(1)**	**Min**	**Max**	**Units**	**Conditions**
TQ50	TqIL	Filter Time to Recognize Low, with Digital Filter	3 * N * TCY	—	ns	N = 1, 2, 4, 16, 32, 64, 128 and 256 **(Note 2)**
TQ51	TqiH	Filter Time to Recognize High, with Digital Filter	3 * N * TCY	—	ns	N = 1, 2, 4, 16, 32, 64, 128 and 256 **(Note 2)**
TQ55	Tqidxr	Index Pulse Recognized to Position Counter Reset (ungated index)	3 TCY	—	ns	—

Note 1: These parameters are characterized but not tested in manufacturing.

2: Alignment of index pulses to QEA and QEB is shown for position counter Reset timing only. Shown for forward direction only (QEA leads QEB). Same timing applies for reverse direction (QEA lags QEB) but index pulse recognition occurs on falling edge.

查询"DSPIC33FJ12MC02ESP"供应商

FIGURE 23-14: SPIx MODULE MASTER MODE (CKE = 0) TIMING CHARACTERISTICS

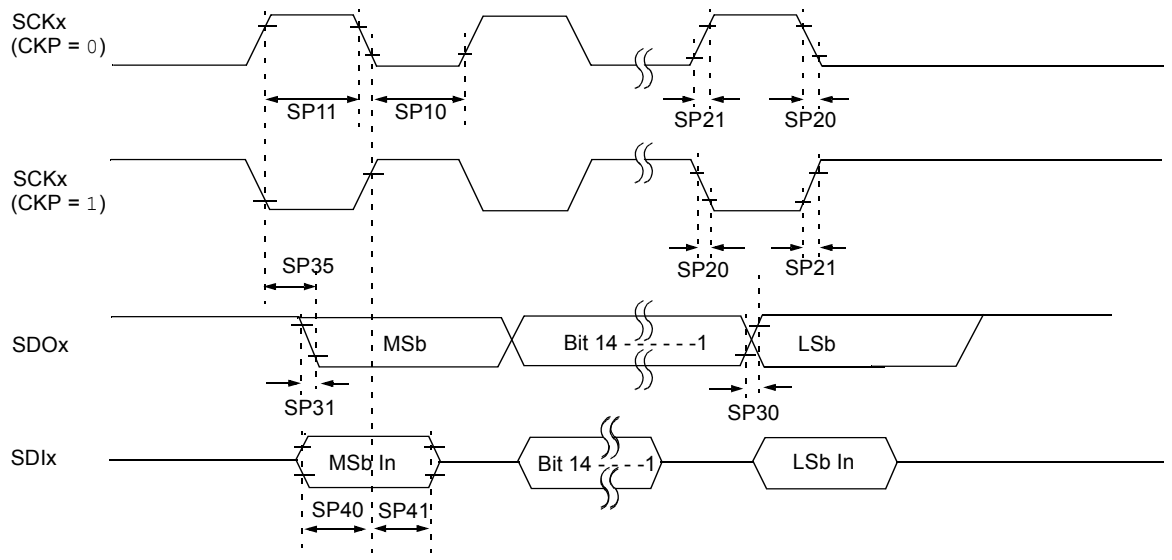

Note: Refer to Figure 23-1 for load conditions.

TABLE 23-32: SPIx MASTER MODE (CKE = 0) TIMING REQUIREMENTS

AC CHARACTERISTICS			Standard Operating Conditions: 3.0V to 3.6V (unless otherwise stated) Operating temperature -40°C ≤ TA ≤ +85°C for Industrial -40°C ≤ TA ≤ +125°C for Extended				
Param No.	**Symbol**	**Characteristic(1)**	**Min**	**Typ(2)**	**Max**	**Units**	**Conditions**
SP10	TscL	SCKx Output Low Time	TCY/2	—	—	ns	See **Note 3**
SP11	TscH	SCKx Output High Time	TCY/2	—	—	ns	See **Note 3**
SP20	TscF	SCKx Output Fall Time	—	—	—	ns	See parameter D032 and **Note 4**
SP21	TscR	SCKx Output Rise Time	—	—	—	ns	See parameter D031 and **Note 4**
SP30	TdoF	SDOx Data Output Fall Time	—	—	—	ns	See parameter D032 and **Note 4**
SP31	TdoR	SDOx Data Output Rise Time	—	—	—	ns	See parameter D031 and **Note 4**
SP35	TscH2doV, TscL2doV	SDOx Data Output Valid after SCKx Edge	—	6	20	ns	—
SP40	TdiV2scH, TdiV2scL	Setup Time of SDIx Data Input to SCKx Edge	23	—	—	ns	—
SP41	TscH2diL, TscL2diL	Hold Time of SDIx Data Input to SCKx Edge	30	—	—	ns	—

Note 1: These parameters are characterized but not tested in manufacturing.

2: Data in “Typ” column is at 3.3V, 25°C unless otherwise stated.

3: The minimum clock period for SCKx is 100 ns. Therefore, the clock generated in Master mode must not violate this specification.

4: Assumes 50 pF load on all SPIx pins.

 © 2007 Microchip Technology Inc.

查询"DSPIC33FJ12MC02ESP"供应商

FIGURE 23-15: SPIx MODULE MASTER MODE (CKE = 1) TIMING CHARACTERISTICS

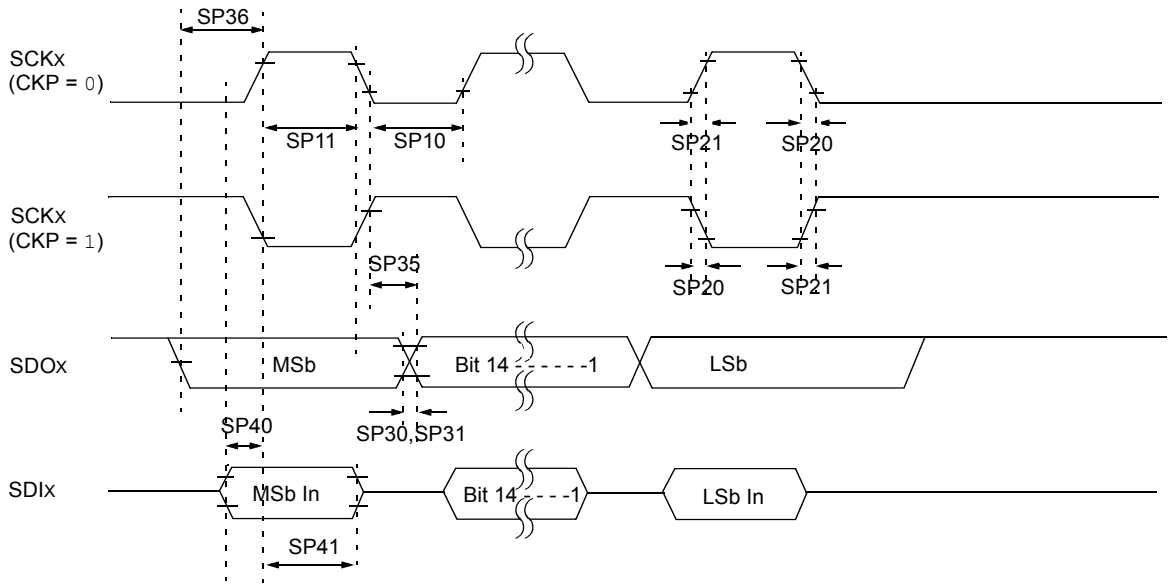

Note: Refer to Figure 23-1 for load conditions.

TABLE 23-33: SPIx MODULE MASTER MODE (CKE = 1) TIMING REQUIREMENTS

AC CHARACTERISTICS			Standard Operating Conditions: 3.0V to 3.6V (unless otherwise stated) Operating temperature -40°C ≤ TA ≤ +85°C for Industrial -40°C ≤ TA ≤ +125°C for Extended				
Param No.	**Symbol**	**Characteristic(1)**	**Min**	**Typ(2)**	**Max**	**Units**	**Conditions**
SP10	TscL	SCKx Output Low Time(3)	TCY/2	—	—	ns	—
SP11	TscH	SCKx Output High Time(3)	TCY/2	—	—	ns	—
SP20	TscF	SCKx Output Fall Time(4)	—	—	—	ns	See parameter D032
SP21	TscR	SCKx Output Rise Time(4)	—	—	—	ns	See parameter D031
SP30	TdoF	SDOx Data Output Fall Time(4)	—	—	—	ns	See parameter D032
SP31	TdoR	SDOx Data Output Rise Time(4)	—	—	—	ns	See parameter D031
SP35	TscH2doV, TscL2doV	SDOx Data Output Valid after SCKx Edge	—	6	20	ns	—
SP36	TdoV2sc, TdoV2scL	SDOx Data Output Setup to First SCKx Edge	30	—	—	ns	—
SP40	TdiV2scH, TdiV2scL	Setup Time of SDIx Data Input to SCKx Edge	23	—	—	ns	—
SP41	TscH2diL, TscL2diL	Hold Time of SDIx Data Input to SCKx Edge	30	—	—	ns	—

Note 1: These parameters are characterized but not tested in manufacturing.

2: Data in "Typ" column is at 3.3V, 25°C unless otherwise stated.

3: The minimum clock period for SCKx is 100 ns. The clock generated in Master mode must not violate this specification.

4: Assumes 50 pF load on all SPIx pins.

查询"DSPIC33FJ12MC02ESP"供应商

FIGURE 23-16: SPIx MODULE SLAVE MODE (CKE = 0) TIMING CHARACTERISTICS

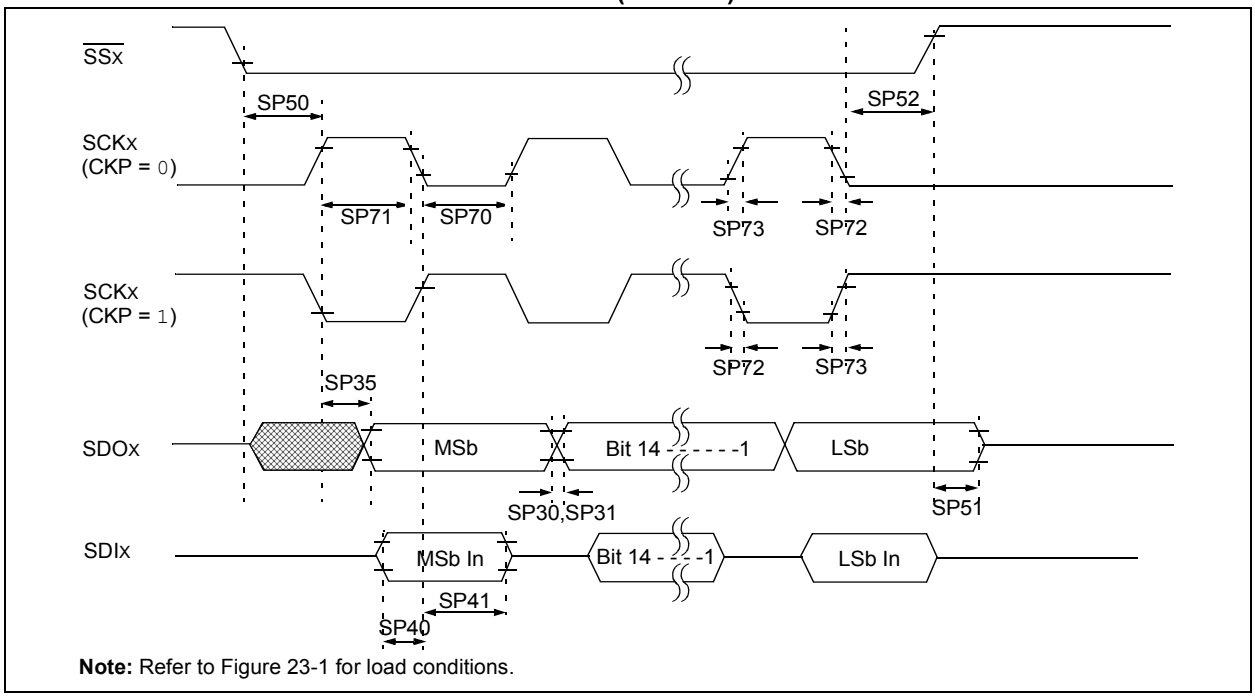

Note: Refer to Figure 23-1 for load conditions.

TABLE 23-34: SPIx MODULE SLAVE MODE (CKE = 0) TIMING REQUIREMENTS

AC CHARACTERISTICS			Standard Operating Conditions: 3.0V to 3.6V (unless otherwise stated) Operating temperature -40°C ≤ TA ≤ +85°C for Industrial -40°C ≤ TA ≤ +125°C for Extended				
Param No.	**Symbol**	**Characteristic(1)**	**Min**	**Typ(2)**	**Max**	**Units**	**Conditions**
SP70	TscL	SCKx Input Low Time	30	—	—	ns	—
SP71	TscH	SCKx Input High Time	30	—	—	ns	—
SP72	TscF	SCKx Input Fall Time(3)	—	10	25	ns	—
SP73	TscR	SCKx Input Rise Time(3)	—	10	25	ns	—
SP30	TdoF	SDOx Data Output Fall Time(3)	—	—	—	ns	See parameter D032
SP31	TdoR	SDOx Data Output Rise Time(3)	—	—	—	ns	See parameter D031
SP35	TscH2doV, TscL2doV	SDOx Data Output Valid after SCKx Edge	—	—	30	ns	—
SP40	TdiV2scH, TdiV2scL	Setup Time of SDIx Data Input to SCKx Edge	20	—	—	ns	—
SP41	TscH2diL, TscL2diL	Hold Time of SDIx Data Input to SCKx Edge	20	—	—	ns	—
SP50	TssL2scH, TssL2scL	$\overline{SSx}$ ↓ to SCKx ↑ or SCKx Input	120	—	—	ns	—
SP51	TssH2doZ	$\overline{SSx}$ ↑ to SDOx Output High-Impedance(3)	10	—	50	ns	—
SP52	TscH2ssH TscL2ssH	$\overline{SSx}$ after SCKx Edge	1.5 TCY +40	—	—	ns	—

Note 1: These parameters are characterized but not tested in manufacturing.
2: Data in "Typ" column is at 5V, 25°C unless otherwise stated.
3: Assumes 50 pF load on all SPIx pins.

 © 2007 Microchip Technology Inc.

查询"DSPIC33FJ12MC02ESP"供应商

FIGURE 23-17: SPIx MODULE SLAVE MODE (CKE = 1) TIMING CHARACTERISTICS

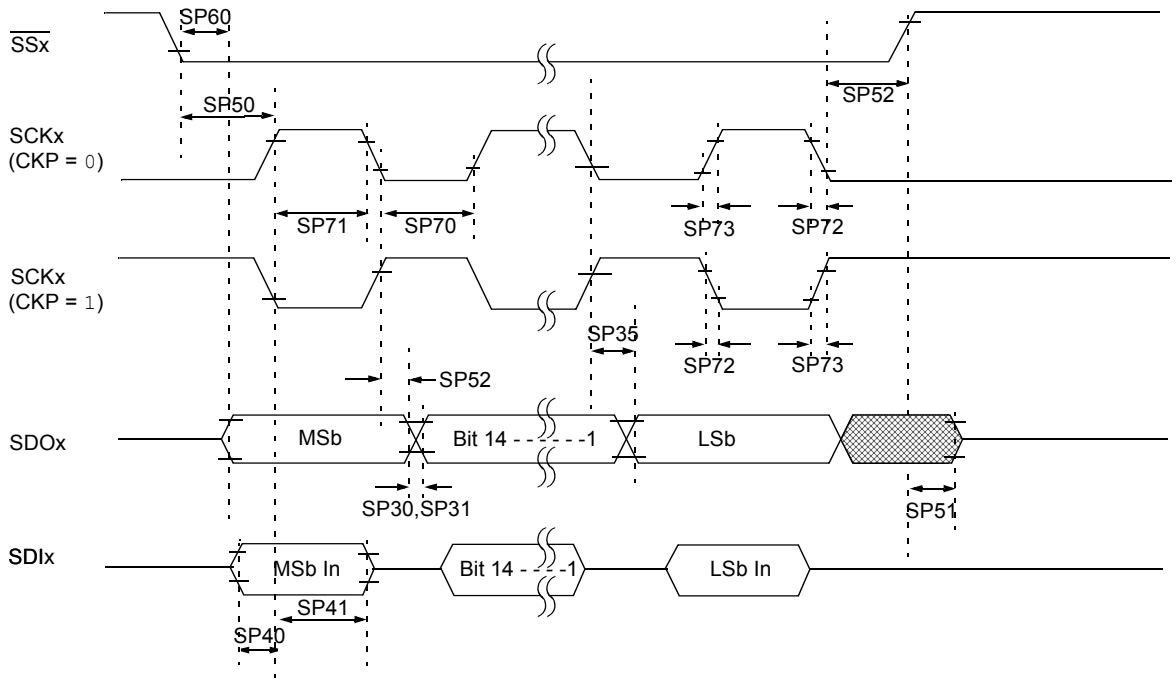

Note: Refer to Figure 23-1 for load conditions.

查询"DSPIC33FJ12MC02ESP"供应商

TABLE 23-35: SPIx MODULE SLAVE MODE (CKE = 1) TIMING REQUIREMENTS

AC CHARACTERISTICS			Standard Operating Conditions: 3.0V to 3.6V (unless otherwise stated) Operating temperature -40°C ≤ TA ≤ +85°C for Industrial -40°C ≤ TA ≤ +125°C for Extended				
Param No.	**Symbol**	**Characteristic(1)**	**Min**	**Typ(2)**	**Max**	**Units**	**Conditions**
SP70	TscL	SCKx Input Low Time	30	—	—	ns	—
SP71	TscH	SCKx Input High Time	30	—	—	ns	—
SP72	TscF	SCKx Input Fall Time(3)	—	10	25	ns	—
SP73	TscR	SCKx Input Rise Time(3)	—	10	25	ns	—
SP30	TdoF	SDOx Data Output Fall Time(3)	—	—	—	ns	See parameter D032
SP31	TdoR	SDOx Data Output Rise Time(3)	—	—	—	ns	See parameter D031
SP35	TscH2doV, TscL2doV	SDOx Data Output Valid after SCKx Edge	—	—	30	ns	—
SP40	TdiV2scH, TdiV2scL	Setup Time of SDIx Data Input to SCKx Edge	20	—	—	ns	—
SP41	TscH2diL, TscL2diL	Hold Time of SDIx Data Input to SCKx Edge	20	—	—	ns	—
SP50	TssL2scH, TssL2scL	$\overline{SSx}$ ↓ to SCKx ↓ or SCKx ↑ Input	120	—	—	ns	—
SP51	TssH2doZ	$\overline{SSx}$ ↑ to SDOx Output High-Impedance(4)	10	—	50	ns	—
SP52	TscH2ssH TscL2ssH	$\overline{SSx}$ ↑ after SCKx Edge	1.5 TCY + 40	—	—	ns	—
SP60	TssL2doV	SDOx Data Output Valid after $\overline{SSx}$ Edge	—	—	50	ns	—

Note 1: These parameters are characterized but not tested in manufacturing.

2: Data in “Typ” column is at 3.3V, 25°C unless otherwise stated.

3: The minimum clock period for SCKx is 100 ns. The clock generated in Master mode must not violate this specification.

4: Assumes 50 pF load on all SPIx pins.

 © 2007 Microchip Technology Inc.

查询"DSPIC33FJ12MC02ESP"供应商

FIGURE 23-18: I2Cx BUS START/STOP BITS TIMING CHARACTERISTICS (MASTER MODE)

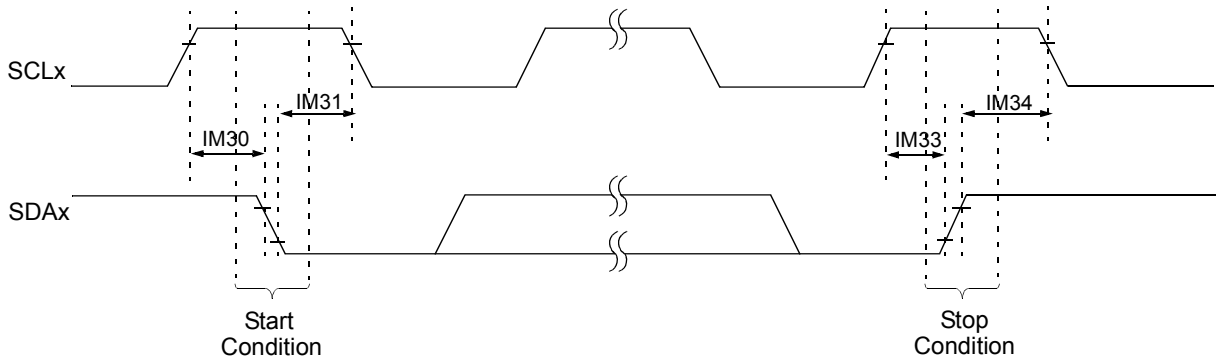

Note: Refer to Figure 23-1 for load conditions.

FIGURE 23-19: I2Cx BUS DATA TIMING CHARACTERISTICS (MASTER MODE)

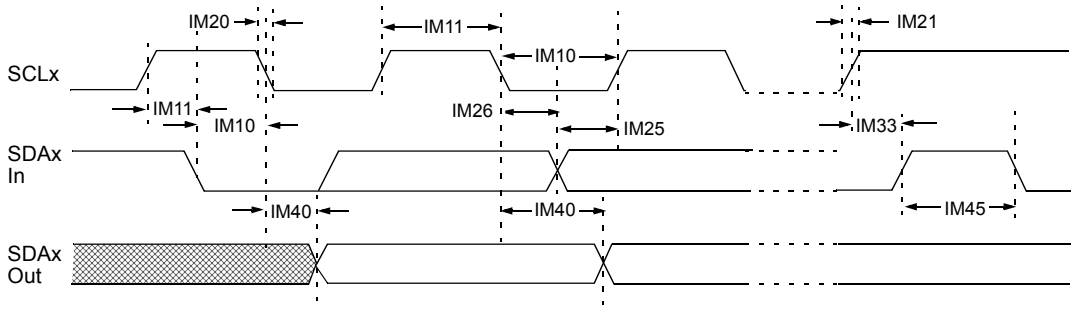

Note: Refer to Figure 23-1 for load conditions.

查询"DSPIC33FJ12MC02ESP"供应商

TABLE 23-36: I2Cx BUS DATA TIMING REQUIREMENTS (MASTER MODE)

AC CHARACTERISTICS				Standard Operating Conditions: 3.0V to 3.6V (unless otherwise stated) Operating temperature -40°C ≤ TA ≤ +85°C for Industrial -40°C ≤ TA ≤ +125°C for Extended			
Param No.	**Symbol**	**Characteristic**		**Min(1)**	**Max**	**Units**	**Conditions**
IM10	TLO:SCL	Clock Low Time	100 kHz mode	TCY/2 (BRG + 1)	—	μs	—
			400 kHz mode	TCY/2 (BRG + 1)	—	μs	—
			1 MHz mode(2)	TCY/2 (BRG + 1)	—	μs	—
IM11	THI:SCL	Clock High Time	100 kHz mode	TCY/2 (BRG + 1)	—	μs	—
			400 kHz mode	TCY/2 (BRG + 1)	—	μs	—
			1 MHz mode(2)	TCY/2 (BRG + 1)	—	μs	—
IM20	TF:SCL	SDAx and SCLx Fall Time	100 kHz mode	—	300	ns	CB is specified to be from 10 to 400 pF
			400 kHz mode	20 + 0.1 CB	300	ns	
			1 MHz mode(2)	—	100	ns	
IM21	TR:SCL	SDAx and SCLx Rise Time	100 kHz mode	—	1000	ns	CB is specified to be from 10 to 400 pF
			400 kHz mode	20 + 0.1 CB	300	ns	
			1 MHz mode(2)	—	300	ns	
IM25	TSU:DAT	Data Input Setup Time	100 kHz mode	250	—	ns	—
			400 kHz mode	100	—	ns	
			1 MHz mode(2)	40	—	ns	
IM26	THD:DAT	Data Input Hold Time	100 kHz mode	0	—	μs	—
			400 kHz mode	0	0.9	μs	
			1 MHz mode(2)	0.2	—	μs	
IM30	TSU:STA	Start Condition Setup Time	100 kHz mode	TCY/2 (BRG + 1)	—	μs	Only relevant for Repeated Start condition
			400 kHz mode	TCY/2 (BRG + 1)	—	μs	
			1 MHz mode(2)	TCY/2 (BRG + 1)	—	μs	
IM31	THD:STA	Start Condition Hold Time	100 kHz mode	TCY/2 (BRG + 1)	—	μs	After this period the first clock pulse is generated
			400 kHz mode	TCY/2 (BRG + 1)	—	μs	
			1 MHz mode(2)	TCY/2 (BRG + 1)	—	μs	
IM33	TSU:STO	Stop Condition Setup Time	100 kHz mode	TCY/2 (BRG + 1)	—	μs	—
			400 kHz mode	TCY/2 (BRG + 1)	—	μs	
			1 MHz mode(2)	TCY/2 (BRG + 1)	—	μs	
IM34	THD:STO	Stop Condition Hold Time	100 kHz mode	TCY/2 (BRG + 1)	—	ns	—
			400 kHz mode	TCY/2 (BRG + 1)	—	ns	
			1 MHz mode(2)	TCY/2 (BRG + 1)	—	ns	
IM40	TAA:SCL	Output Valid From Clock	100 kHz mode	—	3500	ns	—
			400 kHz mode	—	1000	ns	—
			1 MHz mode(2)	—	400	ns	—
IM45	TBF:SDA	Bus Free Time	100 kHz mode	4.7	—	μs	Time the bus must be free before a new transmission can start
			400 kHz mode	1.3	—	μs	
			1 MHz mode(2)	0.5	—	μs	
IM50	CB	Bus Capacitive Loading		—	400	pF	

Note 1: BRG is the value of the I²C Baud Rate Generator. Refer to **Section 19. "Inter-Integrated Circuit (I²C™)"** in the "*dsPIC33F Family Reference Manual*". Please see the Microchip web site (www.microchip.com) for the latest dsPIC33F Family Reference Manual chapters.

2: Maximum pin capacitance = 10 pF for all I2Cx pins (for 1 MHz mode only).

 © 2007 Microchip Technology Inc.

查询"DSPIC33FJ12MC02ESP"供应商

FIGURE 23-20: I2Cx BUS START/STOP BITS TIMING CHARACTERISTICS (SLAVE MODE)

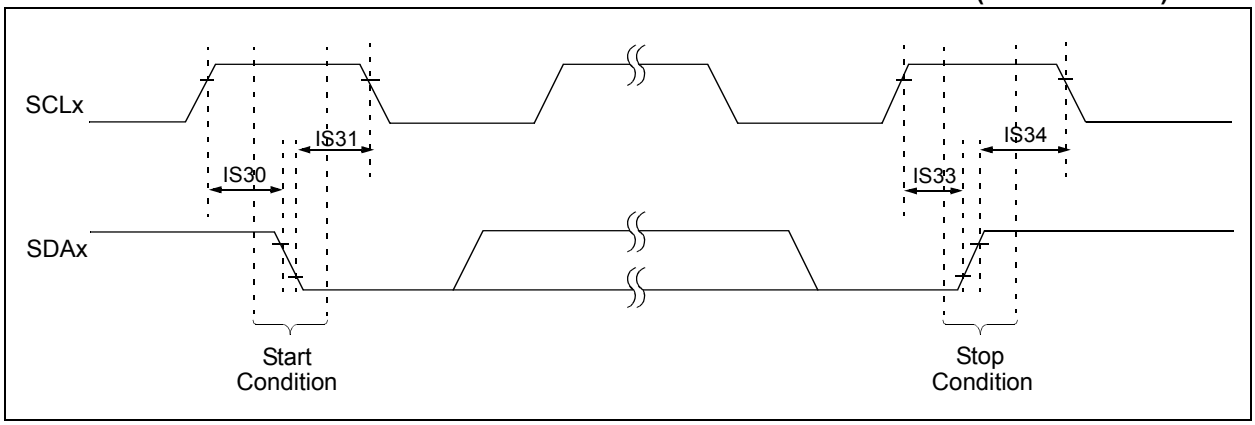

FIGURE 23-21: I2Cx BUS DATA TIMING CHARACTERISTICS (SLAVE MODE)

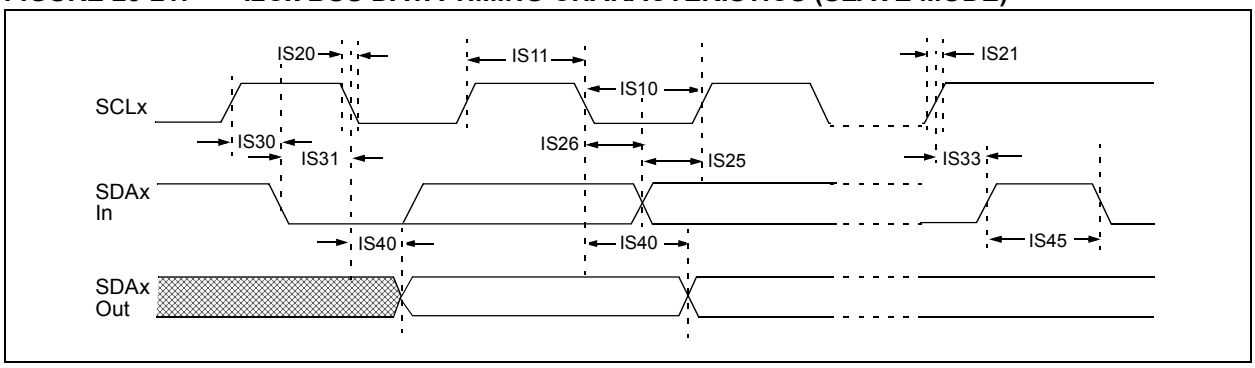

查询"DSPIC33FJ12MC02ESP"供应商

TABLE 23-37: I2Cx BUS DATA TIMING REQUIREMENTS (SLAVE MODE)

AC CHARACTERISTICS				Standard Operating Conditions: 3.0V to 3.6V (unless otherwise stated) Operating temperature -40°C ≤ TA ≤ +85°C for Industrial -40°C ≤ TA ≤ +125°C for Extended			
Param.	**Symbol**	**Characteristic**		**Min**	**Max**	**Units**	**Conditions**
IS10	TLO:SCL	Clock Low Time	100 kHz mode	4.7	—	μs	Device must operate at a minimum of 1.5 MHz
			400 kHz mode	1.3	—	μs	Device must operate at a minimum of 10 MHz
			1 MHz mode(1)	0.5	—	μs	—
IS11	THI:SCL	Clock High Time	100 kHz mode	4.0	—	μs	Device must operate at a minimum of 1.5 MHz
			400 kHz mode	0.6	—	μs	Device must operate at a minimum of 10 MHz
			1 MHz mode(1)	0.5	—	μs	—
IS20	TF:SCL	SDAx and SCLx Fall Time	100 kHz mode	—	300	ns	CB is specified to be from 10 to 400 pF
			400 kHz mode	20 + 0.1 CB	300	ns	
			1 MHz mode(1)	—	100	ns	
IS21	TR:SCL	SDAx and SCLx Rise Time	100 kHz mode	—	1000	ns	CB is specified to be from 10 to 400 pF
			400 kHz mode	20 + 0.1 CB	300	ns	
			1 MHz mode(1)	—	300	ns	
IS25	TSU:DAT	Data Input Setup Time	100 kHz mode	250	—	ns	—
			400 kHz mode	100	—	ns	
			1 MHz mode(1)	100	—	ns	
IS26	THD:DAT	Data Input Hold Time	100 kHz mode	0	—	μs	—
			400 kHz mode	0	0.9	μs	
			1 MHz mode(1)	0	0.3	μs	
IS30	TSU:STA	Start Condition Setup Time	100 kHz mode	4.7	—	μs	Only relevant for Repeated Start condition
			400 kHz mode	0.6	—	μs	
			1 MHz mode(1)	0.25	—	μs	
IS31	THD:STA	Start Condition Hold Time	100 kHz mode	4.0	—	μs	After this period, the first clock pulse is generated
			400 kHz mode	0.6	—	μs	
			1 MHz mode(1)	0.25	—	μs	
IS33	TSU:STO	Stop Condition Setup Time	100 kHz mode	4.7	—	μs	—
			400 kHz mode	0.6	—	μs	
			1 MHz mode(1)	0.6	—	μs	
IS34	THD:STO	Stop Condition Hold Time	100 kHz mode	4000	—	ns	—
			400 kHz mode	600	—	ns	
			1 MHz mode(1)	250		ns	
IS40	TAA:SCL	Output Valid From Clock	100 kHz mode	0	3500	ns	—
			400 kHz mode	0	1000	ns	
			1 MHz mode(1)	0	350	ns	
IS45	TBF:SDA	Bus Free Time	100 kHz mode	4.7	—	μs	Time the bus must be free before a new transmission can start
			400 kHz mode	1.3	—	μs	
			1 MHz mode(1)	0.5	—	μs	
IS50	CB	Bus Capacitive Loading		—	400	pF	—

Note 1: Maximum pin capacitance = 10 pF for all I2Cx pins (for 1 MHz mode only).

 © 2007 Microchip Technology Inc.

查询"DSPIC33FJ12MC02ESP"供应商

TABLE 23-38: ADC MODULE SPECIFICATIONS

AC CHARACTERISTICS			Standard Operating Conditions: 3.0V to 3.6V (unless otherwise stated) Operating temperature -40°C ≤ TA ≤ +85°C for Industrial -40°C ≤ TA ≤ +125°C for Extended				
Param No.	**Symbol**	**Characteristic**	**Min.**	**Typ**	**Max.**	**Units**	**Conditions**
Device Supply							
AD01	AVDD	Module VDD Supply	Greater of VDD – 0.3 or 3.0	—	Lesser of VDD + 0.3 or 3.6	V	—
AD02	AVSS	Module VSS Supply	VSS – 0.3	—	VSS + 0.3	V	—
Reference Inputs							
AD05	VREFH	Reference Voltage High	AVSS + 2.7	—	AVDD	V	See **Note 2**
AD05a			3.0	—	3.6	V	VREFH = AVDD VREFL = AVSS = 0
AD06	VREFL	Reference Voltage Low	AVSS	—	AVDD – 2.7	V	See **Note 2**
AD06a			0	—	0	V	VREFH = AVDD VREFL = AVSS = 0
AD07	VREF	Absolute Reference Voltage	3.0	—	3.6	V	VREF = VREFH - VREFL
AD08	IREF	Current Drain	—	389 .001	549 1	μA μA	ADC operating ADC off
Analog Input							
AD12	VINH	Input Voltage Range VINH	VINL	—	VREFH	V	This voltage reflects Sample and Hold Channels 0, 1, 2, and 3 (CH0-CH3), positive input
AD13	VINL	Input Voltage Range VINL	VREFL	—	AVSS + 1V	V	This voltage reflects Sample and Hold Channels 0, 1, 2, and 3 (CH0-CH3), negative input
AD17	RIN	Recommended Impedance of Analog Voltage Source	—	—	200 200	Ω Ω	10-bit 12-bit

Note 1: The ADC conversion result never decreases with an increase in the input voltage, and has no missing codes.

2: These parameters are not characterized or tested in manufacturing.

查询"DSPIC33FJ12MC02ESP"供应商

TABLE 23-39: ADC MODULE SPECIFICATIONS (12-BIT MODE)

AC CHARACTERISTICS			Standard Operating Conditions: 3.0V to 3.6V (unless otherwise stated) Operating temperature -40°C ≤ TA ≤ +85°C for Industrial -40°C ≤ TA ≤ +125°C for Extended				
Param No.	**Symbol**	**Characteristic**	**Min.**	**Typ**	**Max.**	**Units**	**Conditions**
ADC Accuracy (12-bit Mode) – Measurements with external VREF+/VREF-							
AD20a	Nr	Resolution	12 data bits			bits	
AD21a	INL	Integral Nonlinearity	-1	—	+1	LSb	VINL = AVSS = VREFL = 0V, AVDD = VREFH = 3.6V
AD22a	DNL	Differential Nonlinearity	>-1	—	<1	LSb	VINL = AVSS = VREFL = 0V, AVDD = VREFH = 3.6V
AD23a	GERR	Gain Error	1.25	1.5	3	LSb	VINL = AVSS = VREFL = 0V, AVDD = VREFH = 3.6V
AD24a	EOFF	Offset Error	-2	-1.52	-1.25	LSb	VINL = AVSS = VREFL = 0V, AVDD = VREFH = 3.6V
AD25a	—	Monotonicity(1)	—	—	—	—	Guaranteed
ADC Accuracy (12-bit Mode) – Measurements with internal VREF+/VREF-							
AD20a	Nr	Resolution	12 data bits			bits	
AD21a	INL	Integral Nonlinearity	-1	—	+1	LSb	VINL = AVSS = VREFL = 0V, AVDD = VREFH = 3.6V
AD22a	DNL	Differential Nonlinearity	>-1	—	<1	LSb	VINL = AVSS = VREFL = 0V, AVDD = VREFH = 3.6V
AD23a	GERR	Gain Error	2	3	7	LSb	VINL = AVSS = VREFL = 0V, AVDD = VREFH = 3.6V
AD24a	EOFF	Offset Error	2	3	5	LSb	VINL = AVSS = VREFL = 0V, AVDD = VREFH = 3.6V
AD25a	—	Monotonicity(1)	—	—	—	—	Guaranteed
Dynamic Performance (12-bit Mode)							
AD30a	THD	Total Harmonic Distortion	-77	-69	-61	dB	—
AD31a	SINAD	Signal to Noise and Distortion	59	63	64	dB	—
AD32a	SFDR	Spurious Free Dynamic Range	63	72	79	dB	—
AD33a	FNYQ	Input Signal Bandwidth	—	—	250	kHz	—
AD34a	ENOB	Effective Number of Bits	10.95	11.1	—	bits	—

Note 1: The ADC conversion result never decreases with an increase in the input voltage, and has no missing codes.

 © 2007 Microchip Technology Inc.

查询"DSPIC33FJ12MC02ESP"供应商

TABLE 23-40: ADC MODULE SPECIFICATIONS (10-BIT MODE)

AC CHARACTERISTICS			Standard Operating Conditions: 3.0V to 3.6V (unless otherwise stated) Operating temperature -40°C ≤ TA ≤ +85°C for Industrial -40°C ≤ TA ≤ +125°C for Extended				
Param No.	**Symbol**	**Characteristic**	**Min.**	**Typ**	**Max.**	**Units**	**Conditions**
ADC Accuracy (10-bit Mode) – Measurements with external VREF+/VREF-							
AD20b	Nr	Resolution	10 data bits			bits	
AD21b	INL	Integral Nonlinearity	-1	—	+1	LSb	VINL = AVSS = VREFL = 0V, AVDD = VREFH = 3.6V
AD22b	DNL	Differential Nonlinearity	>-1	—	<1	LSb	VINL = AVSS = VREFL = 0V, AVDD = VREFH = 3.6V
AD23b	GERR	Gain Error	1	3	6	LSb	VINL = AVSS = VREFL = 0V, AVDD = VREFH = 3.6V
AD24b	EOFF	Offset Error	1	2	5	LSb	VINL = AVSS = VREFL = 0V, AVDD = VREFH = 3.6V
AD25b	—	Monotonicity(1)	—	—	—	—	Guaranteed
ADC Accuracy (10-bit Mode) – Measurements with internal VREF+/VREF-							
AD20b	Nr	Resolution	10 data bits			bits	
AD21b	INL	Integral Nonlinearity	-1	—	+1	LSb	VINL = AVSS = VREFL = 0V, AVDD = VREFH = 3.6V
AD22b	DNL	Differential Nonlinearity	>-1	—	<1	LSb	VINL = AVSS = VREFL = 0V, AVDD = VREFH = 3.6V
AD23b	GERR	Gain Error	±1	±5	±6	LSb	VINL = AVSS = VREFL = 0V, AVDD = VREFH = 3.6V
AD24b	EOFF	Offset Error	±1	±2	±3	LSb	VINL = AVSS = VREFL = 0V, AVDD = VREFH = 3.6V
AD25b	—	Monotonicity(1)	—	—	—	—	Guaranteed
Dynamic Performance (10-bit Mode)							
AD30b	THD	Total Harmonic Distortion	—	-64	-67	dB	—
AD31b	SINAD	Signal to Noise and Distortion	—	57	58	dB	—
AD32b	SFDR	Spurious Free Dynamic Range	—	67	71	dB	—
AD33b	FNYQ	Input Signal Bandwidth	—	—	550	kHz	—
AD34b	ENOB	Effective Number of Bits	9.1	9.7	9.8	bits	—

Note 1: The ADC conversion result never decreases with an increase in the input voltage, and has no missing codes.

查询"DSPIC33FJ12MC02ESP"供应商

FIGURE 23-22: ADC CONVERSION (12-BIT MODE) TIMING CHARACTERISTICS (ASAM = 0, SSRC<2:0> = 000)

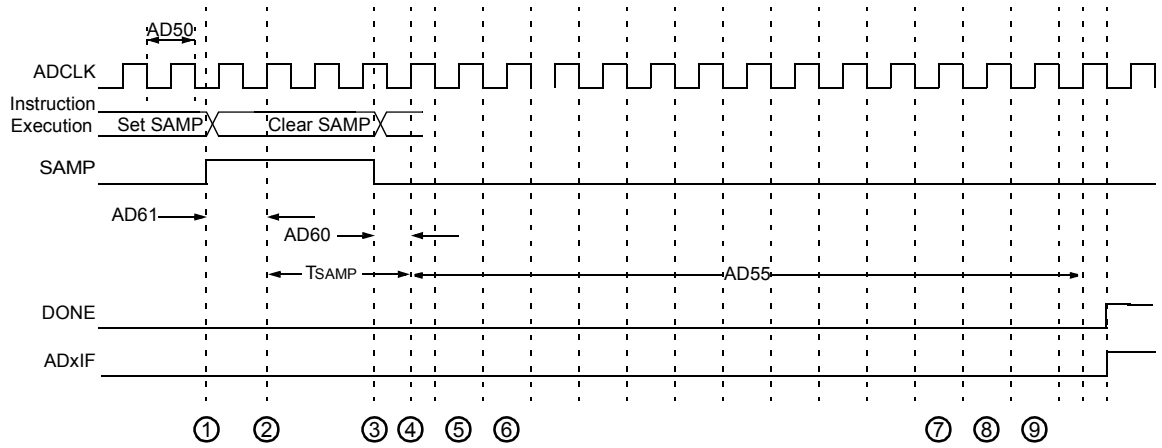

① – Software sets ADxCON. SAMP to start sampling.

② – Sampling starts after discharge period. TSAMP is described in **Section 28. "10/12-bit ADC without DMA"** in the *"dsPIC33F Family Reference Manual"*. Please see the Microchip web site (www.microchip.com) for the latest dsPIC33F Family Reference Manual sections.

③ – Software clears ADxCON. SAMP to start conversion.

④ – Sampling ends, conversion sequence starts.

⑤ – Convert bit 11.

⑥ – Convert bit 10.

⑦ – Convert bit 1.

⑧ – Convert bit 0.

⑨ – One TAD for end of conversion.

TABLE 23-41: ADC CONVERSION (12-BIT MODE) TIMING REQUIREMENTS

AC CHARACTERISTICS			Standard Operating Conditions: 3.0V to 3.6V (unless otherwise stated) Operating temperature -40°C ≤ TA ≤ +85°C for Industrial -40°C ≤ TA ≤ +125°C for Extended				
Param No.	**Symbol**	**Characteristic**	**Min.**	**Typ(2)**	**Max.**	**Units**	**Conditions**
Clock Parameters(1)							
AD50	TAD	ADC Clock Period	117.6	—	—	ns	
AD51	tRC	ADC Internal RC Oscillator Period	—	250	—	ns	
Conversion Rate							
AD55	tCONV	Conversion Time	—	14 TAD		ns	
AD56	FCNV	Throughput Rate	—	—	500	Ksps	
AD57	TSAMP	Sample Time	3 TAD	—	—	—	
Timing Parameters							
AD60	tPCS	Conversion Start from Sample Trigger(2)	—	1.0 TAD	—	—	Auto-convert trigger not selected
AD61	tPSS	Sample Start from Setting Sample (SAMP) bit(2)	0.5 TAD	—	1.5 TAD	—	—
AD62	tCSS	Conversion Completion to Sample Start (ASAM = 1)(2)	—	0.5 TAD	—	—	—
AD63	tDPU	Time to Stabilize Analog Stage from ADC Off to ADC On(2)	1	—	5	µs	—

Note 1: Because the sample caps will eventually lose charge, clock rates below 10 kHz may affect linearity performance, especially at elevated temperatures.

2: These parameters are characterized but not tested in manufacturing.

 © 2007 Microchip Technology Inc.

查询"DSPIC33FJ12MC02ESP"供应商

FIGURE 23-23: ADC CONVERSION (10-BIT MODE) TIMING CHARACTERISTICS (CHPS<1:0> = 01, SIMSAM = 0, ASAM = 0, SSRC<2:0> = 000)

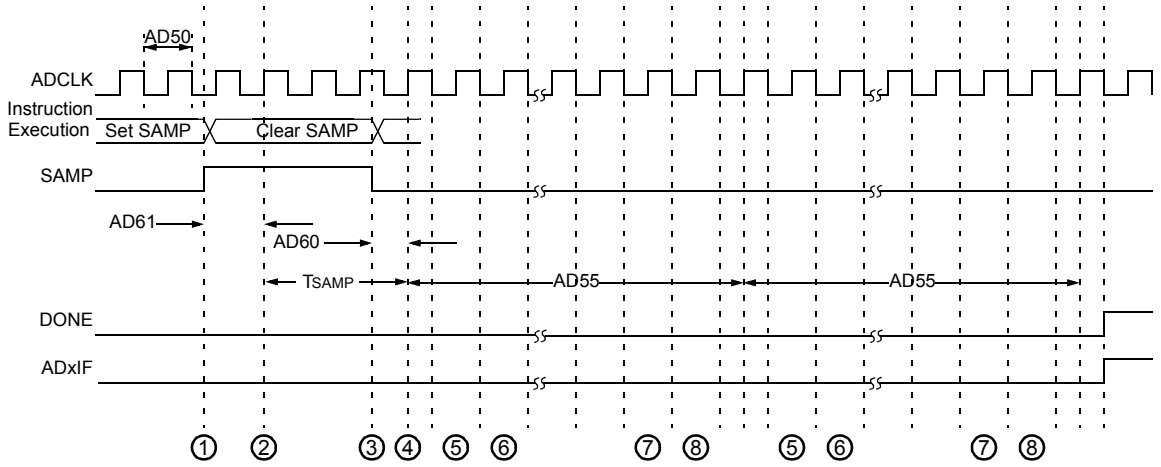

1 – Software sets ADxCON. SAMP to start sampling.

2 – Sampling starts after discharge period. TSAMP is described in **Section 28. "10/12-bit ADC without DMA"** in the *"dsPIC33F Family Reference Manual"*.

3 – Software clears ADxCON. SAMP to start conversion.

4 – Sampling ends, conversion sequence starts.

5 – Convert bit 9.

6 – Convert bit 8.

7 – Convert bit 0.

8 – One TAD for end of conversion.

FIGURE 23-24: ADC CONVERSION (10-BIT MODE) TIMING CHARACTERISTICS (CHPS<1:0> = 01, SIMSAM = 0, ASAM = 1, SSRC<2:0> = 111, SAMC<4:0> = 00001)

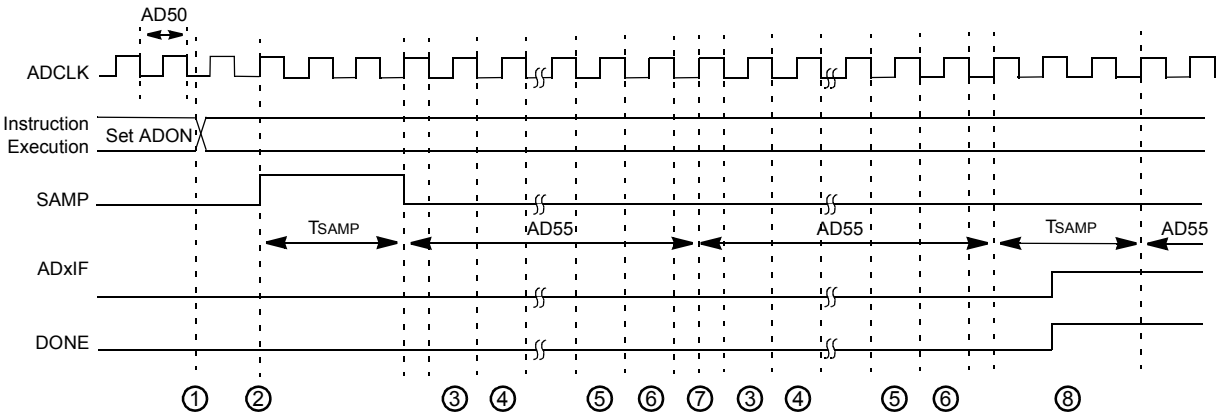

1 – Software sets ADxCON. ADON to start AD operation.

2 – Sampling starts after discharge period. TSAMP is described in **Section 28. "10/12-bit ADC without DMA"** in the *"dsPIC33F Family Reference Manual'*.

3 – Convert bit 9.

4 – Convert bit 8.

5 – Convert bit 0.

6 – One TAD for end of conversion.

7 – Begin conversion of next channel.

8 – Sample for time specified by SAMC<4:0>.

查询"DSPIC33FJ12MC02ESP"供应商

TABLE 23-42: ADC CONVERSION (10-BIT MODE) TIMING REQUIREMENTS

AC CHARACTERISTICS			Standard Operating Conditions: 3.0V to 3.6V (unless otherwise stated) Operating temperature -40°C ≤ TA ≤ +85°C for Industrial -40°C ≤ TA ≤ +125°C for Extended				
Param No.	**Symbol**	**Characteristic**	**Min.**	**Typ(1)**	**Max.**	**Units**	**Conditions**
Clock Parameters(2)							
AD50	TAD	ADC Clock Period	65	—	—	ns	
AD51	tRC	ADC Internal RC Oscillator Period	—	250	—	ns	
Conversion Rate							
AD55	tCONV	Conversion Time	—	12 TAD	—	—	
AD56	FCNV	Throughput Rate	—	—	1.1	Msps	
AD57	TSAMP	Sample Time	2 TAD	—	—	—	
Timing Parameters							
AD60	tPCS	Conversion Start from Sample Trigger(1)	—	1.0 TAD	—	—	Auto-Convert Trigger (SSRC<2:0> = 111) not selected
AD61	tPSS	Sample Start from Setting Sample (SAMP) bit(1)	0.5 TAD	—	1.5 TAD	—	—
AD62	tCSS	Conversion Completion to Sample Start (ASAM = 1)(1)	—	0.5 TAD	—	—	—
AD63	tDPU	Time to Stabilize Analog Stage from ADC Off to ADC On(1)	1	—	5	μs	—

Note 1: These parameters are characterized but not tested in manufacturing.

2: Because the sample caps will eventually lose charge, clock rates below 10 kHz may affect linearity performance, especially at elevated temperatures.

 © 2007 Microchip Technology Inc.

查询"DSPIC33FJ12MC02ESP"供应商

24.0 PACKAGING INFORMATION

24.1 Package Marking Information

20-Lead PDIP

Example

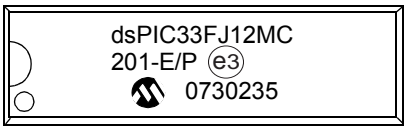

20-Lead SSOP

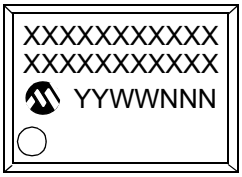

Example

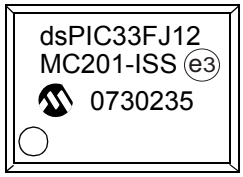

28-Lead SPDIP

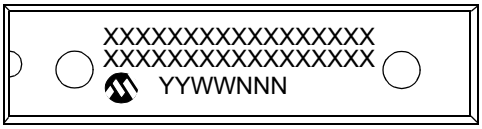

Example

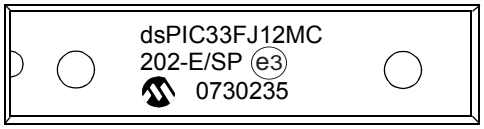

28-Lead SOIC (.300”)

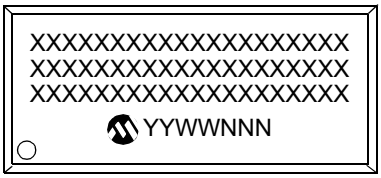

Example

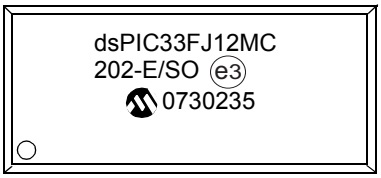

28-Lead QFN

Example

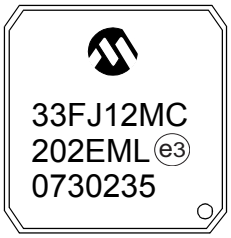

Legend:	XX...X	Customer-specific information
	Y	Year code (last digit of calendar year)
	YY	Year code (last 2 digits of calendar year)
	WW	Week code (week of January 1 is week ‘01’)
	NNN	Alphanumeric traceability code
	e3	Pb-free JEDEC designator for Matte Tin (Sn)
	*	This package is Pb-free. The Pb-free JEDEC designator (e3) can be found on the outer packaging for this package.

Note: If the full Microchip part number cannot be marked on one line, it is carried over to the next line, thus limiting the number of available characters for customer-specific information.

查询"DSPIC33FJ12MC02ESP"供应商

24.2 Package Details

20-Lead Plastic Dual In-Line (P) – 300 mil Body [PDIP]

Note: For the most current package drawings, please see the Microchip Packaging Specification located at http://www.microchip.com/packaging

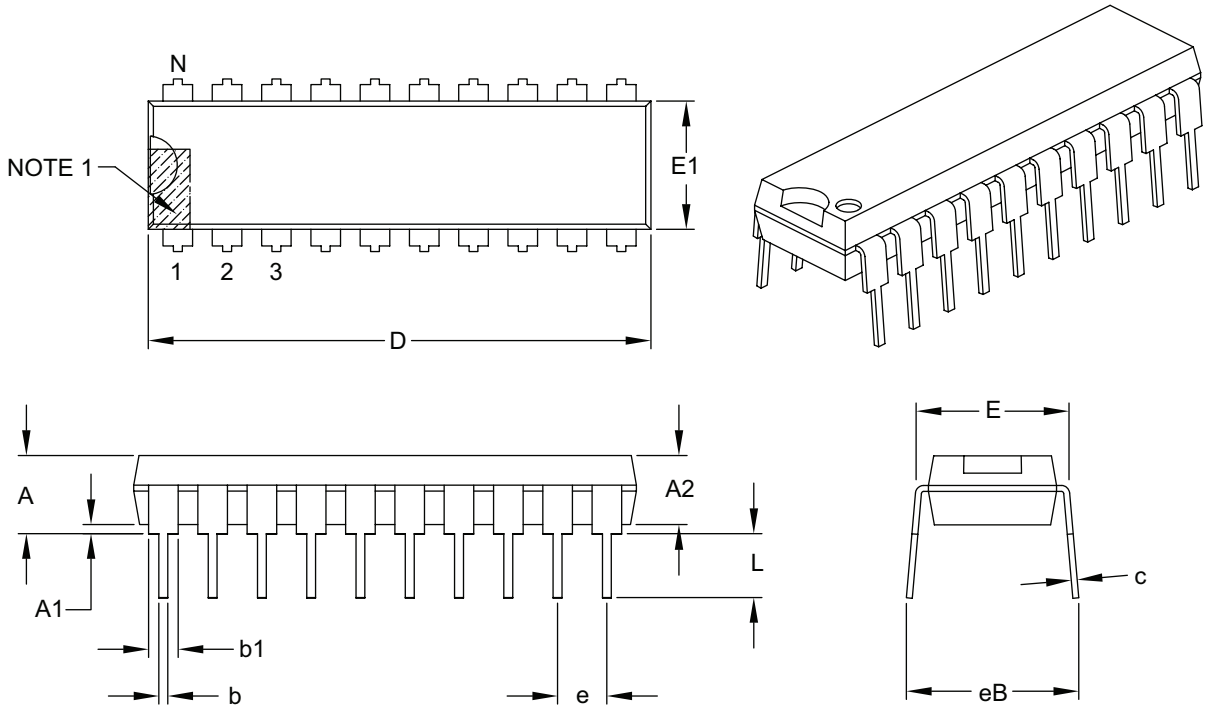

Units		INCHES		
Dimension Limits		MIN	NOM	MAX
Number of Pins	N	20		
Pitch	e	.100 BSC		
Top to Seating Plane	A	–	–	.210
Molded Package Thickness	A2	.115	.130	.195
Base to Seating Plane	A1	.015	–	–
Shoulder to Shoulder Width	E	.300	.310	.325
Molded Package Width	E1	.240	.250	.280
Overall Length	D	.980	1.030	1.060
Tip to Seating Plane	L	.115	.130	.150
Lead Thickness	c	.008	.010	.015
Upper Lead Width	b1	.045	.060	.070
Lower Lead Width	b	.014	.018	.022
Overall Row Spacing §	eB	–	–	.430

Notes:

1. Pin 1 visual index feature may vary, but must be located within the hatched area.
2. § Significant Characteristic.
3. Dimensions D and E1 do not include mold flash or protrusions. Mold flash or protrusions shall not exceed .010" per side.
4. Dimensioning and tolerancing per ASME Y14.5M.

   BSC: Basic Dimension. Theoretically exact value shown without tolerances.

Microchip Technology Drawing C04-019B

 © 2007 Microchip Technology Inc.

查询"DSPIC33FJ12MC02ESP"供应商

20-Lead Plastic Shrink Small Outline (SS) – 5.30 mm Body [SSOP]

Note: For the most current package drawings, please see the Microchip Packaging Specification located at http://www.microchip.com/packaging

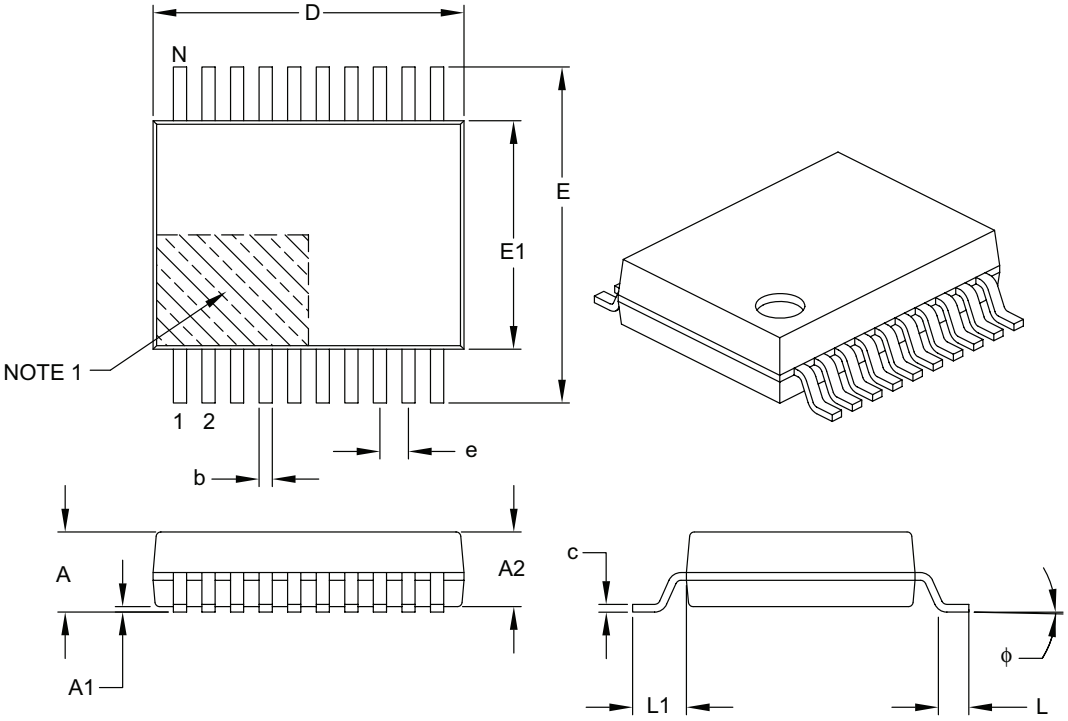

Units		MILLIMETERS		
Dimension Limits		MIN	NOM	MAX
Number of Pins	N	20		
Pitch	e	0.65 BSC		
Overall Height	A	–	–	2.00
Molded Package Thickness	A2	1.65	1.75	1.85
Standoff	A1	0.05	–	–
Overall Width	E	7.40	7.80	8.20
Molded Package Width	E1	5.00	5.30	5.60
Overall Length	D	6.90	7.20	7.50
Foot Length	L	0.55	0.75	0.95
Footprint	L1	1.25 REF		
Lead Thickness	c	0.09	–	0.25
Foot Angle	ϕ	0°	4°	8°
Lead Width	b	0.22	–	0.38

Notes:

1. Pin 1 visual index feature may vary, but must be located within the hatched area.
2. Dimensions D and E1 do not include mold flash or protrusions. Mold flash or protrusions shall not exceed 0.20 mm per side.
3. Dimensioning and tolerancing per ASME Y14.5M.

   BSC: Basic Dimension. Theoretically exact value shown without tolerances.
   REF: Reference Dimension, usually without tolerance, for information purposes only.

Microchip Technology Drawing C04-072B

查询"DSPIC33FJ12MC02ESP"供应商

28-Lead Skinny Plastic Dual In-Line (SP) – 300 mil Body [SPDIP]

Note: For the most current package drawings, please see the Microchip Packaging Specification located at http://www.microchip.com/packaging

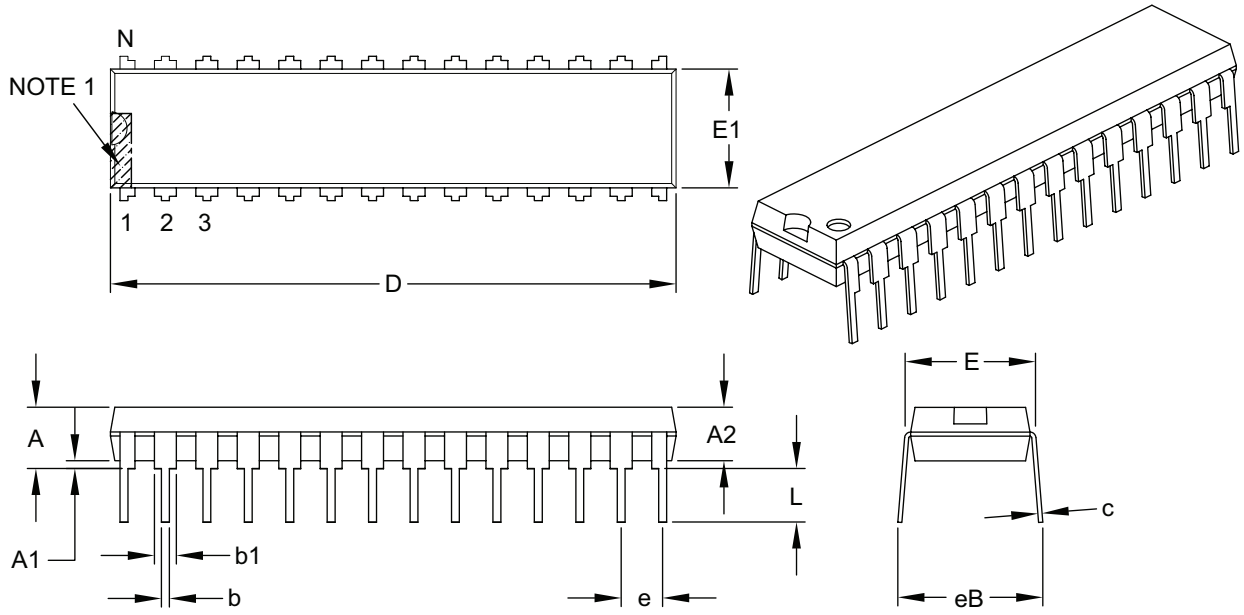

Units		INCHES		
Dimension Limits		MIN	NOM	MAX
Number of Pins	N	28		
Pitch	e	.100 BSC		
Top to Seating Plane	A	–	–	.200
Molded Package Thickness	A2	.120	.135	.150
Base to Seating Plane	A1	.015	–	–
Shoulder to Shoulder Width	E	.290	.310	.335
Molded Package Width	E1	.240	.285	.295
Overall Length	D	1.345	1.365	1.400
Tip to Seating Plane	L	.110	.130	.150
Lead Thickness	c	.008	.010	.015
Upper Lead Width	b1	.040	.050	.070
Lower Lead Width	b	.014	.018	.022
Overall Row Spacing §	eB	–	–	.430

Notes:

1. Pin 1 visual index feature may vary, but must be located within the hatched area.
2. § Significant Characteristic.
3. Dimensions D and E1 do not include mold flash or protrusions. Mold flash or protrusions shall not exceed .010" per side.
4. Dimensioning and tolerancing per ASME Y14.5M.

   BSC: Basic Dimension. Theoretically exact value shown without tolerances.

Microchip Technology Drawing C04-070B

 © 2007 Microchip Technology Inc.

查询"DSPIC33FJ12MC02ESP"供应商

28-Lead Plastic Small Outline (SO) – Wide, 7.50 mm Body [SOIC]

Note: For the most current package drawings, please see the Microchip Packaging Specification located at http://www.microchip.com/packaging

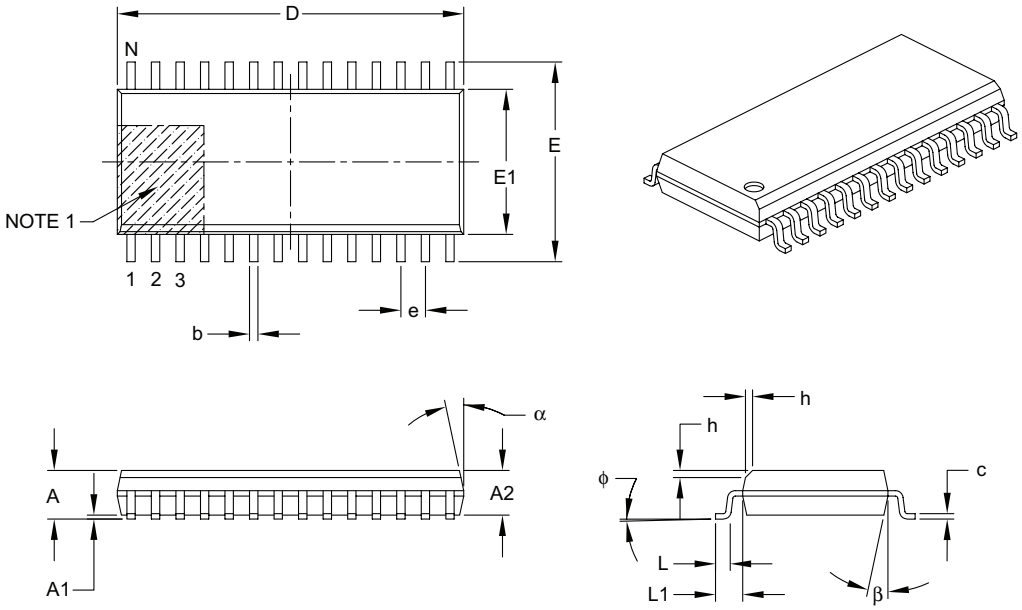

Units		MILLMETERS		
Dimension Limits		MIN	NOM	MAX
Number of Pins	N	28		
Pitch	e	1.27 BSC		
Overall Height	A	–	–	2.65
Molded Package Thickness	A2	2.05	–	–
Standoff §	A1	0.10	–	0.30
Overall Width	E	10.30 BSC		
Molded Package Width	E1	7.50 BSC		
Overall Length	D	17.90 BSC		
Chamfer (optional)	h	0.25	–	0.75
Foot Length	L	0.40	–	1.27
Footprint	L1	1.40 REF		
Foot Angle Top	ϕ	0°	–	8°
Lead Thickness	c	0.18	–	0.33
Lead Width	b	0.31	–	0.51
Mold Draft Angle Top	α	5°	–	15°
Mold Draft Angle Bottom	β	5°	–	15°

Notes:

1. Pin 1 visual index feature may vary, but must be located within the hatched area.
2. § Significant Characteristic.
3. Dimensions D and E1 do not include mold flash or protrusions. Mold flash or protrusions shall not exceed 0.15 mm per side.
4. Dimensioning and tolerancing per ASME Y14.5M.
   BSC: Basic Dimension. Theoretically exact value shown without tolerances.
   REF: Reference Dimension, usually without tolerance, for information purposes only.

Microchip Technology Drawing C04-052B

查询"DSPIC33FJ12MC02ESP"供应商

28-Lead Plastic Quad Flat, No Lead Package (ML) – 6x6 mm Body [QFN] with 0.55 mm Contact Length

Note: For the most current package drawings, please see the Microchip Packaging Specification located at http://www.microchip.com/packaging

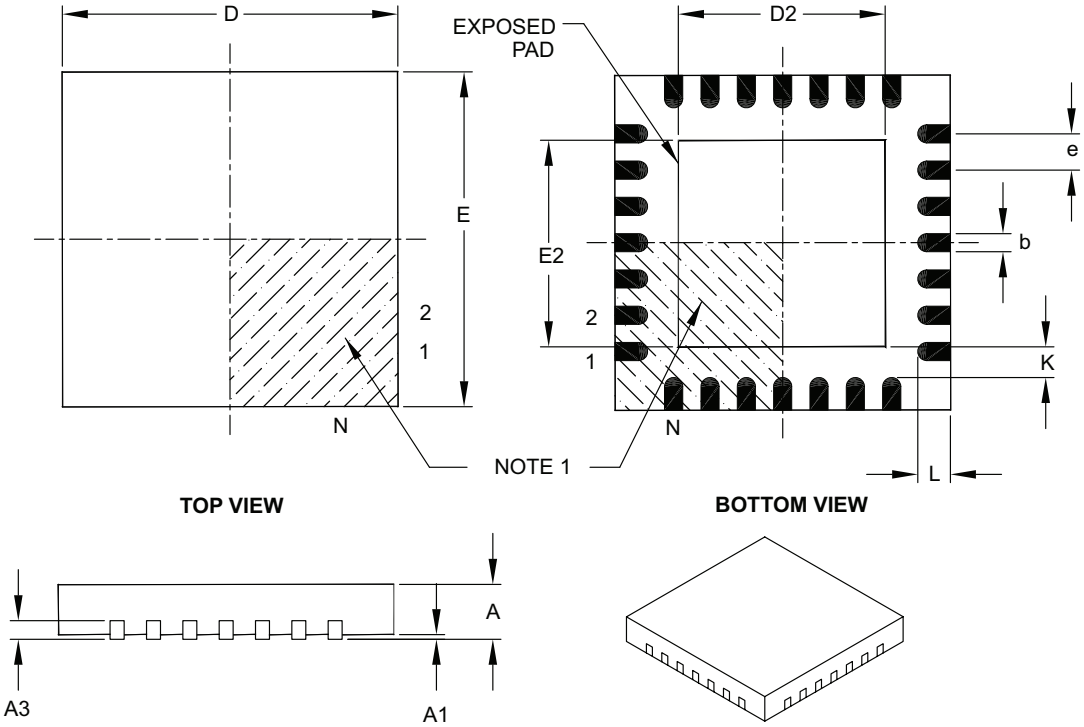

Units		MILLIMETERS		
Dimension Limits		MIN	NOM	MAX
Number of Pins	N	28		
Pitch	e	0.65 BSC		
Overall Height	A	0.80	0.90	1.00
Standoff	A1	0.00	0.02	0.05
Contact Thickness	A3	0.20 REF		
Overall Width	E	6.00 BSC		
Exposed Pad Width	E2	3.65	3.70	4.20
Overall Length	D	6.00 BSC		
Exposed Pad Length	D2	3.65	3.70	4.20
Contact Width	b	0.23	0.30	0.35
Contact Length	L	0.50	0.55	0.70
Contact-to-Exposed Pad	K	0.20	–	–

Notes:

1. Pin 1 visual index feature may vary, but must be located within the hatched area.
2. Package is saw singulated.
3. Dimensioning and tolerancing per ASME Y14.5M.
   BSC: Basic Dimension. Theoretically exact value shown without tolerances.
   REF: Reference Dimension, usually without tolerance, for information purposes only.

Microchip Technology Drawing C04-105B

 © 2007 Microchip Technology Inc.

查询"DSPIC33FJ12MC02ESP"供应商

APPENDIX A: REVISION HISTORY

Revision A (January 2007)

Initial release of this document.

Revision B (May 2007)

This revision includes the following corrections and updates:

- Minor typographical and formatting corrections throughout the data sheet text.
- New content:
  - Addition of bullet item (16-word conversion result buffer) (see **Section 19.1 "Key Features"**)
- Figure update:
  - Oscillator System Diagram (see Figure 7-1)
  - WDT Block Diagram (see Figure 20-2)
- Equation update:
  - Serial Clock Rate (see Equation 17-1)
- Register updates:
  - Clock Divisor Register (see Register 7-2)
  - PLL Feedback Divisor Register (see Register 7-3)
  - Peripheral Pin Select Input Registers (see Register 9-1 through Register 9-13)
  - Note 2 in PWM Control Register 1 (see Register 14-5)
  - ADC1 Input Channel 1, 2, 3 Select Register (see Register 19-4)
  - ADC1 Input Channel 0 Select Register (see Register 19-5)
- Table updates:
  - AD1CON3 (see Table 3-15 and Table 3-16)
  - RPINR15 (see Table 3-17)
  - TRISA (see Table 3-20)
  - TRISB (see Table 3-22)
  - Reset Flag Bit Operation (see Table 5-1)
  - Configuration Bit Values for Clock Operation (see Table 7-1)
- Operation value update:
  - IOLOCK set/clear operation (see **Section 9.4.4.1 "Control Register Lock"**)
- The following tables in **Section 23.0 "Electrical Characteristics"** have been updated with preliminary values:
  - Updated Max MIPS for -40°C to +125°C Temp Range (see Table 23-1)
  - Updated parameter DC18 (see Table 23-4)
  - Added new parameters for +125°C, and updated Typical and Max values for most parameters (see Table 23-5)
  - Added new parameters for +125°C, and updated Typical and Max values for most parameters (see Table 23-6)
  - Added new parameters for +125°C, and updated Typical and Max values for most parameters (see Table 23-7)
  - Added new parameters for +125°C, and updated Typical and Max values for most parameters (see Table 23-8)
  - Updated parameter DI51, added parameters DI51a, DI51b, and DI51c (see Table 23-9)
  - Added Note 1 (see Table 23-11)
  - Updated parameter OS30 (see Table 23-16)
  - Updated parameter OS52 (see Table 23-17)
  - Updated parameter F20, added Note 2 (see Table 23-18)
  - Updated parameter F21 (see Table 23-19)
  - Updated parameter TA15 (see Table 23-22)
  - Updated parameter TB15 (see Table 23-23)
  - Updated parameter TC15 (see Table 23-24)
  - Updated parameter IC15 (see Table 23-26)
  - Updated parameters AD05, AD06, AD07, AD08, AD10, and AD11; added parameters AD05a and AD06a; added Note 2; modified ADC Accuracy headings to include measurement information (see Table 23-38)
  - Separated the ADC Module Specifications table into three tables (see Table 23-38, Table 23-39, and Table 23-40)
  - Updated parameter AD50 (see Table 23-41)
  - Updated parameters AD50 and AD57 (see Table 23-42)

查询"DSPIC33FJ12MC02ESP"供应商

NOTES:

 © 2007 Microchip Technology Inc.

查询"DSPIC33FJ12MC02ESP"供应商

INDEX

A

AC Characteristics 238
  Internal RC Accuracy 240
  Load Conditions 238
ADC
  Initialization 199
  Key Features 199
ADC Module
  ADC1 Register Map 36
  ADC11 Register Map 35
Alternate Vector Table (AIVT) 61
Analog-to-Digital Converter (ADC) 199
Arithmetic Logic Unit (ALU) 18
Assembler
  MPASM Assembler 226
Automatic Clock Stretch 183
  Receive Mode 183
  Transmit Mode 183

B

Barrel Shifter 22
Bit-Reversed Addressing 43
  Example 44
  Implementation 43
  Sequence Table (16-Entry) 44
Block Diagrams
  16-bit Timer1 Module 129
  ADC Module 200
  Connections for On-Chip Voltage Regulator 214
  Device Clock 93, 95
  DSP Engine 19
  dsPIC33FJ12MC201/202 8
  dsPIC33FJ12MC201/202 CPU Core 12
  Input Capture 137
  Output Compare 141
  PLL 95
  PWM Module 144, 145
  Quadrature Encoder Interface 165
  Reset System 55
  Shared Port Structure 105
  SPI 174
  Timer2 (16-bit) 133
  Timer2/3 (32-bit) 132
  UART 191
  Watchdog Timer (WDT) 215

C

C Compilers
  MPLAB C18 226
  MPLAB C30 226
Clock Switching 101
  Enabling 101
  Sequence 101
Code Examples
  Erasing a Program Memory Page 53
  Initiating a Programming Sequence 54
  Loading Write Buffers 54
  Port Write/Read 106
  PWRSAV Instruction Syntax 103
Code Protection 211, 216
Configuration Bits 211
Configuration Register Map 211
Configuring Analog Port Pins 106
CPU
  Control Register 14
CPU Clocking System 94
  PLL Configuration 94
  Selection 94
  Sources 94
Customer Change Notification Service 279
Customer Notification Service 279
Customer Support 279

D

Data Accumulators and Adder/Subtracter 20
  Data Space Write Saturation 22
  Overflow and Saturation 20
  Round Logic 21
  Write Back 21
Data Address Space 25
  Alignment 25
  Memory Map for dsPIC33FJ12MC201/202
    Devices with 1 KB RAM 26
  Near Data Space 25
  Software Stack 40
  Width 25
DC Characteristics 230
  I/O Pin Input Specifications 235
  I/O Pin Output Specifications 236
  Idle Current (IDOZE) 234
  Idle Current (IIDLE) 233
  Operating Current (IDD) 232
  Power-Down Current (IPD) 234
  Program Memory 237
  Temperature and Voltage Specifications 231
Development Support 225
Doze Mode 104
DSP Engine 18
  Multiplier 20

E

Electrical Characteristics 229
  AC 238
Equations
  ADC Conversion Clock Period 201
  Calculating the PWM Period 140
  Calculation for Maximum PWM Resolution 140
  Device Operating Frequency 94
  PWM Period 147
  PWM Resolution 147
  Relationship Between Device and SPI Clock
    Speed 176
  Serial Clock Rate 181
  UART Baud Rate with BRGH = 0 192
  UART Baud Rate with BRGH = 1 192
Errata 6

F

Flash Program Memory 49
  Control Registers 50
  Operations 50
  Programming Algorithm 53
  RTSP Operation 50
  Table Instructions 49
Flexible Configuration 211
FSCM
  Delay for Crystal and PLL Clock Sources 59
  Device Resets 59

查询"DSPIC33FJ12MC02ESP"供应商

I

I/O Ports 105
  Parallel I/O (PIO) 105
  Write/Read Timing 106
I²C
  Addresses 183
  Baud Rate Generator 181
  General Call Address Support 183
  Interrupts 181
  IPMI Support 183
  Master Mode Operation
    Clock Arbitration 184
    Multi-Master Communication, Bus Collision and Bus Arbitration 184
  Operating Modes 181
  Registers 181
  Slave Address Masking 183
  Slope Control 184
  Software Controlled Clock Stretching (STREN = 1) 183
I²C Module
  I2C1 Register Map 33
In-Circuit Debugger 216
In-Circuit Emulation 211
In-Circuit Serial Programming (ICSP) 211, 216
Infrared Support
  Built-in IrDA Encoder and Decoder 193
  External IrDA, IrDA Clock Output 193
Input Capture 137
  Registers 138
Input Change Notification 106
Instruction Addressing Modes 40
  File Register Instructions 40
  Fundamental Modes Supported 41
  MAC Instructions 41
  MCU Instructions 40
  Move and Accumulator Instructions 41
  Other Instructions 41
Instruction Set
  Overview 220
  Summary 217
Instruction-Based Power-Saving Modes 103
  Idle 104
  Sleep 103
Internal RC Oscillator
  Use with WDT 215
Internet Address 279
Interrupt Control and Status Registers 65
  IECx 65
  IFSx 65
  INTCON1 65
  INTCON2 65
  IPCx 65
Interrupt Setup Procedures 91
  Initialization 91
  Interrupt Disable 91
  Interrupt Service Routine 91
  Trap Service Routine 91
Interrupt Vector Table (IVT) 61
Interrupts Coincident with Power Save Instructions 104

J

JTAG Boundary Scan Interface 211
JTAG Interface 216

M

Memory Organization 23
Microchip Internet Web Site 279
Modulo Addressing 42
  Applicability 43
  Operation Example 42
  Start and End Address 42
  W Address Register Selection 42
Motor Control PWM 143
Motor Control PWM Module
  2-Output Register Map 33
  4-Output Register Map 32
  6-Output Register Map 32
MPLAB ASM30 Assembler, Linker, Librarian 226
MPLAB ICD 2 In-Circuit Debugger 227
MPLAB ICE 2000 High-Performance Universal In-Circuit Emulator 227
MPLAB Integrated Development Environment Software 225
MPLAB PM3 Device Programmer 227
MPLAB REAL ICE In-Circuit Emulator System 227
MPLINK Object Linker/MPLIB Object Librarian 226

N

NVM Module
  Register Map 39

O

Open-Drain Configuration 106
Output Compare 139

P

Packaging 267
  Details 268
  Marking 267
Peripheral Module Disable (PMD) 104
PICSTART Plus Development Programmer 228
Pinout I/O Descriptions (table) 9
PMD Module
  Register Map 39
POR and Long Oscillator Start-up Times 59
PORTA
  Register Map 38
PORTB
  Register Map for dsPIC33FJ12MC201 38
  Register Map for dsPIC33FJ12MC202 38
Power-Saving Features 103
  Clock Frequency and Switching 103
Program Address Space 23
  Construction 45
  Data Access from Program Memory Using Program Space Visibility 48
  Data Access from Program Memory Using Table Instructions 47
  Data Access from, Address Generation 46
  Memory Map 23
  Table Read Instructions
    TBLRDH 47
    TBLRDL 47
  Visibility Operation 48

 © 2007 Microchip Technology Inc.

查询"DSPIC33FJ12MC02ESP"供应商

Program Memory
Interrupt Vector ... 24
Organization ... 24
Reset Vector ... 24
Pulse-Width Modulation Mode ... 140
PWM
Center-Aligned ... 148
Complementary Mode ... 149
Complementary Output Mode ... 151
Duty Cycle ... 140
Edge-Aligned ... 147
Independent Output Mode ... 151
Operation During CPU Idle Mode ... 153
Operation During CPU Sleep Mode ... 153
Output Override ... 151
Output Override Synchronization ... 151
Period ... 140, 147
Single Pulse Mode ... 151
PWM Dead-Time Generators ... 149
Assignment ... 150
Ranges ... 150
Selection Bits (table) ... 150
PWM Duty Cycle
Comparison Units ... 148
Immediate Updates ... 149
Register Buffers ... 148
PWM Fault Pins ... 151
Enable Bits ... 152
Fault States ... 152
Input Modes ... 152
Cycle-by-Cycle ... 152
Latched ... 152
Priority ... 152
PWM Output and Polarity Control ... 151
Output Pin Control ... 151
PWM Special Event Trigger ... 153
Postscaler ... 153
PWM Time Base ... 146
Continuous Up/Down Count Modes ... 146
Double Update Mode ... 147
Free-Running Mode ... 146
Postscaler ... 147
Prescaler ... 147
Single-Shot Mode ... 146
PWM Update Lockout ... 152

Q

QEI
16-bit Up/Down Position Counter Mode ... 166
Alternate 16-bit Timer/Counter ... 167
Count Direction Status ... 166
Error Checking ... 166
Interrupts ... 168
Logic ... 166
Operation During CPU Idle Mode ... 167
Operation During CPU Sleep Mode ... 167
Position Measurement Mode ... 166
Programmable Digital Noise Filters ... 167
Timer Operation During CPU Idle Mode ... 168
Timer Operation During CPU Sleep Mode ... 167
Quadrature Encoder Interface (QEI) ... 165
Quadrature Encoder Interface (QEI) Module
Register Map ... 33

R

Reader Response ... 280
Registers
AD1CHS123 (ADC1 Input Channel 1, 2, 3 Select) ... 206
ADxCHS0 (ADCx Input Channel 0 Select ... 208
ADxCON1 (ADCx Control 1) ... 202
ADxCON2 (ADCx Control 2) ... 204
ADxCON3 (ADCx Control 3) ... 205
ADxCSSL (ADCx Input Scan Select Low) ... 209
ADxPCFGL (ADCx Port Configuration Low) ... 210
CLKDIV (Clock Divisor) ... 98
CORCON (Core Control) ... 16, 66
DFLTCON (QEI Control) ... 171
I2CxCON (I2Cx Control) ... 185
I2CxMSK (I2Cx Slave Mode Address Mask) ... 189
I2CxSTAT (I2Cx Status) ... 187
IEC0 (Interrupt Enable Control 0) ... 75
IEC1 (Interrupt Enable Control 1) ... 77
IEC3 (Interrupt Enable Control 3) ... 78
IEC4 (Interrupt Enable Control 4) ... 79
IFS0 (Interrupt Flag Status 0) ... 70
IFS1 (Interrupt Flag Status 1) ... 72
IFS3 (Interrupt Flag Status 3) ... 73
IFS4 (Interrupt Flag Status 4) ... 74
INTCON1 (Interrupt Control 1) ... 67
INTCON2 (Interrupt Control 2) ... 69
INTTREG Interrupt Control and Status Register ... 90
IPC0 (Interrupt Priority Control 0) ... 80
IPC1 (Interrupt Priority Control 1) ... 81
IPC14 (Interrupt Priority Control 14) ... 87
IPC15 (Interrupt Priority Control 15) ... 88
IPC16 (Interrupt Priority Control 16) ... 88
IPC18 (Interrupt Priority Control 18) ... 89
IPC2 (Interrupt Priority Control 2) ... 82
IPC3 (Interrupt Priority Control 3) ... 83
IPC4 (Interrupt Priority Control 4) ... 84
IPC5 (Interrupt Priority Control 5) ... 85
IPC7 (Interrupt Priority Control 7) ... 86
NVMCON (Flash Memory Control) ... 51
NVMKEY (Nonvolatile Memory Key) ... 52
OCxCON (Output Compare x Control) ... 142
OSCCON (Oscillator Control) ... 96
OSCTUN (FRC Oscillator Tuning) ... 100
P1DC3 (PWM Duty Cycle 3) ... 164
PLLFBD (PLL Feedback Divisor) ... 99
PWMxCON1 (PWM Control 1) ... 157
PWMxCON2 (PWM Control 2) ... 158
PxDC1 (PWM Duty Cycle 1) ... 163
PxDC2 (PWM Duty Cycle 2) ... 163
PxDTCON1 (Dead-Time Control 1) ... 159
PxDTCON2 (Dead-Time Control 2) ... 160
PxFLTACON (Fault A Control) ... 161
PxOVDCON (Override Control) ... 162
PxSECMP (Special Event Compare) ... 156
PxTCON (PWM Time Base Control) ... 154
PxTMR (PWM Timer Count Value) ... 155
PxTPER (PWM Time Base Period) ... 155
QEICON (QEI Control) ... 169
RCON (Reset Control) ... 56
SPIxCON1 (SPIx Control 1) ... 178
SPIxCON2 (SPIx Control 2) ... 180
SPIxSTAT (SPIx Status and Control) ... 177
SR (CPU Status) ... 14, 66
T1CON (Timer1 Control) ... 130

查询"DSPIC33FJ12MC02ESP"供应商

T2CON Control 134
T3CON Control 135
TCxCON (Input Capture x Control) 138
UxMODE (UARTx Mode) 194
UxSTA (UARTx Status and Control) 196
Reset
Clock Source Selection 58
Special Function Register Reset States 59
Times 58
Reset Sequence 61
Resets 55

S

Serial Peripheral Interface (SPI) 173
Setup for Continuous Output Pulse Generation 139
Setup for Single Output Pulse Generation 139
Software Simulator (MPLAB SIM) 226
Software Stack Pointer, Frame Pointer
CALLL Stack Frame 40
Special Features of the CPU 211
SPI
Master, Frame Master Connection 175
Master/Slave Connection 175
Slave, Frame Master Connection 176
Slave, Frame Slave Connection 176
SPI Module
SPI1 Register Map 34
Symbols Used in Opcode Descriptions 218
System Control
Register Map 39

T

Temperature and Voltage Specifications
AC 238
Timer1 129
Timer2/3 131
Timing Characteristics
CLKO and I/O 241
Timing Diagrams
10-bit A/D Conversion (CHPS = 01, SIMSAM = 0, ASAM = 0, SSRC = 000) 265
10-bit A/D Conversion (CHPS = 01, SIMSAM = 0, ASAM = 1, SSRC = 111, SAMC = 00001) 265
12-bit A/D Conversion (ASAM = 0, SSRC = 000) 264
Center-Aligned PWM 148
Dead-Time 150
Edge-Aligned PWM 148
External Clock 239
I2Cx Bus Data (Master Mode) 257
I2Cx Bus Data (Slave Mode) 259
I2Cx Bus Start/Stop Bits (Master Mode) 257
I2Cx Bus Start/Stop Bits (Slave Mode) 259
Input Capture (CAPx) 247
Motor Control PWM 249
Motor Control PWM Fault 249
OC/PWM 248
Output Compare (OCx) 247
QEA/QEB Input 250
QEI Module Index Pulse 251
Reset, Watchdog Timer, Oscillator Start-up Timer and Power-up Timer 242
SPIx Master Mode (CKE = 0) 252
SPIx Master Mode (CKE = 1) 253
SPIx Slave Mode (CKE = 0) 254
SPIx Slave Mode (CKE = 1) 255
Timer1, 2 and 3 External Clock 244
TimerQ (QEI Module) External Clock 246
Timing Requirements
CLKO and I/O 241
External Clock 239
Input Capture 247
Timing Specifications
10-bit A/D Conversion Requirements 266
12-bit A/D Conversion Requirements 264
I2Cx Bus Data Requirements (Master Mode) 258
I2Cx Bus Data Requirements (Slave Mode) 260
Motor Control PWM Requirements 249
Output Compare Requirements 247
PLL Clock 240
QEI External Clock Requirements 246
QEI Index Pulse Requirements 251
Quadrature Decoder Requirements 250
Reset, Watchdog Timer, Oscillator Start-up Timer, Power-up Timer and Brown-out Reset Requirements 243
Simple OC/PWM Mode Requirements 248
SPIx Master Mode (CKE = 0) Requirements 252
SPIx Master Mode (CKE = 1) Requirements 253
SPIx Slave Mode (CKE = 0) Requirements 254
SPIx Slave Mode (CKE = 1) Requirements 256
Timer1 External Clock Requirements 244
Timer2 External Clock Requirements 245
Timer3 External Clock Requirements 245

U

UART
Baud Rate
Generator (BRG) 192
Break and Sync Transmit Sequence 193
Flow Control Using $\overline{\text{UxCTS}}$ and $\overline{\text{UxRTS}}$ Pins 193
Receiving in 8-bit or 9-bit Data Mode 193
Transmitting in 8-bit Data Mode 193
Transmitting in 9-bit Data Mode 193
UART Module
UART1 Register Map 34
Universal Asynchronous Receiver Transmitter (UART) ... 191

V

Voltage Regulator (On-Chip) 214

W

Watchdog Timer (WDT) 211, 215
Programming Considerations 215
WWW Address 279
WWW, On-Line Support 6

 © 2007 Microchip Technology Inc.

查询"DSPIC33FJ12MC02ESP"供应商

THE MICROCHIP WEB SITE

Microchip provides online support via our WWW site at www.microchip.com. This web site is used as a means to make files and information easily available to customers. Accessible by using your favorite Internet browser, the web site contains the following information:

- **Product Support** – Data sheets and errata, application notes and sample programs, design resources, user's guides and hardware support documents, latest software releases and archived software
- **General Technical Support** – Frequently Asked Questions (FAQ), technical support requests, online discussion groups, Microchip consultant program member listing
- **Business of Microchip** – Product selector and ordering guides, latest Microchip press releases, listing of seminars and events, listings of Microchip sales offices, distributors and factory representatives

CUSTOMER CHANGE NOTIFICATION SERVICE

Microchip's customer notification service helps keep customers current on Microchip products. Subscribers will receive e-mail notification whenever there are changes, updates, revisions or errata related to a specified product family or development tool of interest.

To register, access the Microchip web site at www.microchip.com, click on Customer Change Notification and follow the registration instructions.

CUSTOMER SUPPORT

Users of Microchip products can receive assistance through several channels:

- Distributor or Representative
- Local Sales Office
- Field Application Engineer (FAE)
- Technical Support

Customers should contact their distributor, representative or field application engineer (FAE) for support. Local sales offices are also available to help customers. A listing of sales offices and locations is included in the back of this document.

Technical support is available through the web site at: http://support.microchip.com

查询"DSPIC33FJ12MC02ESP"供应商

READER RESPONSE

It is our intention to provide you with the best documentation possible to ensure successful use of your Microchip product. If you wish to provide your comments on organization, clarity, subject matter, and ways in which our documentation can better serve you, please FAX your comments to the Technical Publications Manager at (480) 792-4150.

Please list the following information, and use this outline to provide us with your comments about this document.

To: Technical Publications Manager Total Pages Sent _____

RE: Reader Response

From: Name _____

Company _____

Address _____

City / State / ZIP / Country _____

Telephone: (_____) _____ - _____ FAX: (_____) _____ - _____

Application (optional):

Would you like a reply?____Y ____N

Device: dsPIC33FJ12MC201/202 Literature Number: DS70265B

Questions:

1. What are the best features of this document?

_____

_____

2. How does this document meet your hardware and software development needs?

_____

_____

3. Do you find the organization of this document easy to follow? If not, why?

_____

_____

4. What additions to the document do you think would enhance the structure and subject?

_____

_____

5. What deletions from the document could be made without affecting the overall usefulness?

_____

_____

6. Is there any incorrect or misleading information (what and where)?

_____

_____

7. How would you improve this document?

_____

_____

© 2007 Microchip Technology Inc.

查询"DSPIC33FJ12MC02ESP"供应商

PRODUCT IDENTIFICATION SYSTEM

To order or obtain information, e.g., on pricing or delivery, refer to the factory or the listed sales office.

dsPIC 33 FJ 12 MC2 02 T E / SP - XXX

- **Microchip Trademark**
- **Architecture**
- **Flash Memory Family**
- **Program Memory Size (KB)**
- **Product Group**
- **Pin Count**
- **Tape and Reel Flag (if applicable)**
- **Temperature Range**
- **Package**
- **Pattern**

Architecture:	33	=	16-bit Digital Signal Controller
Flash Memory Family:	FJ	=	Flash program memory, 3.3V
Product Group:	MC2	=	Motor Control family
Pin Count:	01	=	20-pin
	02	=	28-pin
Temperature Range:	I	=	-40°C to+85°C (Industrial)
	E	=	-40°C to+125°C (Extended)
Package:	P	=	Plastic Dual In-Line - 300 mil body (PDIP)
	SS	=	Plastic Shrink Small Outline -209 mil body (SSOP)
	SP	=	Skinny Plastic Dual In-Line - 300 mil body (SPDIP)
	SO	=	Plastic Small Outline - Wide, 300 mil body (SOIC)
	ML	=	Plastic Quad, No Lead Package - 6x6 mm body (QFN)

Examples:

a) dsPIC33FJ12MC202-E/SP:
Motor Control dsPIC33, 12 KB program memory, 28-pin, Extended temp., SPDIP package.

查询"DSPIC33FJ12MC02ESP"供应商

MICROCHIP

WORLDWIDE SALES AND SERVICE

AMERICAS

Corporate Office
2355 West Chandler Blvd.
Chandler, AZ 85224-6199
Tel: 480-792-7200
Fax: 480-792-7277
Technical Support:
http://support.microchip.com
Web Address:
www.microchip.com

Atlanta
Duluth, GA
Tel: 678-957-9614
Fax: 678-957-1455

Boston
Westborough, MA
Tel: 774-760-0087
Fax: 774-760-0088

Chicago
Itasca, IL
Tel: 630-285-0071
Fax: 630-285-0075

Dallas
Addison, TX
Tel: 972-818-7423
Fax: 972-818-2924

Detroit
Farmington Hills, MI
Tel: 248-538-2250
Fax: 248-538-2260

Kokomo
Kokomo, IN
Tel: 765-864-8360
Fax: 765-864-8387

Los Angeles
Mission Viejo, CA
Tel: 949-462-9523
Fax: 949-462-9608

Santa Clara
Santa Clara, CA
Tel: 408-961-6444
Fax: 408-961-6445

Toronto
Mississauga, Ontario,
Canada
Tel: 905-673-0699
Fax: 905-673-6509

ASIA/PACIFIC

Asia Pacific Office
Suites 3707-14, 37th Floor
Tower 6, The Gateway
Habour City, Kowloon
Hong Kong
Tel: 852-2401-1200
Fax: 852-2401-3431

Australia - Sydney
Tel: 61-2-9868-6733
Fax: 61-2-9868-6755

China - Beijing
Tel: 86-10-8528-2100
Fax: 86-10-8528-2104

China - Chengdu
Tel: 86-28-8665-5511
Fax: 86-28-8665-7889

China - Fuzhou
Tel: 86-591-8750-3506
Fax: 86-591-8750-3521

China - Hong Kong SAR
Tel: 852-2401-1200
Fax: 852-2401-3431

China - Qingdao
Tel: 86-532-8502-7355
Fax: 86-532-8502-7205

China - Shanghai
Tel: 86-21-5407-5533
Fax: 86-21-5407-5066

China - Shenyang
Tel: 86-24-2334-2829
Fax: 86-24-2334-2393

China - Shenzhen
Tel: 86-755-8203-2660
Fax: 86-755-8203-1760

China - Shunde
Tel: 86-757-2839-5507
Fax: 86-757-2839-5571

China - Wuhan
Tel: 86-27-5980-5300
Fax: 86-27-5980-5118

China - Xian
Tel: 86-29-8833-7250
Fax: 86-29-8833-7256

ASIA/PACIFIC

India - Bangalore
Tel: 91-80-4182-8400
Fax: 91-80-4182-8422

India - New Delhi
Tel: 91-11-4160-8631
Fax: 91-11-4160-8632

India - Pune
Tel: 91-20-2566-1512
Fax: 91-20-2566-1513

Japan - Yokohama
Tel: 81-45-471- 6166
Fax: 81-45-471-6122

Korea - Gumi
Tel: 82-54-473-4301
Fax: 82-54-473-4302

Korea - Seoul
Tel: 82-2-554-7200
Fax: 82-2-558-5932 or
82-2-558-5934

Malaysia - Penang
Tel: 60-4-646-8870
Fax: 60-4-646-5086

Philippines - Manila
Tel: 63-2-634-9065
Fax: 63-2-634-9069

Singapore
Tel: 65-6334-8870
Fax: 65-6334-8850

Taiwan - Hsin Chu
Tel: 886-3-572-9526
Fax: 886-3-572-6459

Taiwan - Kaohsiung
Tel: 886-7-536-4818
Fax: 886-7-536-4803

Taiwan - Taipei
Tel: 886-2-2500-6610
Fax: 886-2-2508-0102

Thailand - Bangkok
Tel: 66-2-694-1351
Fax: 66-2-694-1350

EUROPE

Austria - Wels
Tel: 43-7242-2244-39
Fax: 43-7242-2244-393

Denmark - Copenhagen
Tel: 45-4450-2828
Fax: 45-4485-2829

France - Paris
Tel: 33-1-69-53-63-20
Fax: 33-1-69-30-90-79

Germany - Munich
Tel: 49-89-627-144-0
Fax: 49-89-627-144-44

Italy - Milan
Tel: 39-0331-742611
Fax: 39-0331-466781

Netherlands - Drunen
Tel: 31-416-690399
Fax: 31-416-690340

Spain - Madrid
Tel: 34-91-708-08-90
Fax: 34-91-708-08-91

UK - Wokingham
Tel: 44-118-921-5869
Fax: 44-118-921-5820

12/08/06

 © 2007 Microchip Technology Inc.