查询"2SD1401"供应商

No.1268

2SD1401

NPN Triple Diffused Planar Type Silicon Transistor

FOR CTV HORIZONTAL DEFLECTION OUTPUT

Features:

- High breakdown voltage and high reliability
- High switching speed
- Capable of being mounted easily due to one-point fixing type plastic mold package

Absolute Maximum Ratings at Ta=25°C

				unit
Collector to Base Voltage	V_{CBO}		1500	V
Collector to Emitter Voltage	V_{CEO}		800	V
Emitter to Base Voltage	V_{EBO}		7	V
Collector Current	I_C		3.5	A
Peak Collector Current	i_{cp}		10	A
Collector Dissipation	P_C	T_C=25°C	80	W
Junction Temperature	T_j		150	°C
Storage Temperature	T_{stg}		-55 to +150	°C

Electrical Characteristics at Ta=25°C

			min	typ	max	unit
Collector Cutoff Current	I_{CBO}	V_{CB}=800V, I_E=0			10	uA
Emitter Cutoff Current	I_{EBO}	V_{EB}=5V, I_C=0			1	mA
DC Current Gain	h_{FE}	V_{CE}=5V, I_C=0.5A	8			
Gain Bandwidth Product	f_T	v_{CE}=10V, I_C=0.5A		3		MHz
C-E Saturation Voltage	$V_{CE(sat)}$	I_C=2.5A, I_B=0.8A			8	V
B-E Saturation Voltage	$V_{BE(sat)}$	I_C=2.5A, I_B=0.8A			1.5	V
C-B Breakdown Voltage	$V_{(BR)CBO}$	I_C=5mA, I_E=0	1500			V
C-E Breakdown Voltage	$V_{(BR)CEO}$	I_C=100mA, R_{BE}=∞	800			V
E-B Breakdown Voltage	$V_{(BR)EBO}$	I_E=200mA, I_C=0	7			V
Fall Time	t_f	I_C=3A, I_{B1}=0.8A, I_{B2}=-1.6A			0.7	us

Switching Time Test Circuit

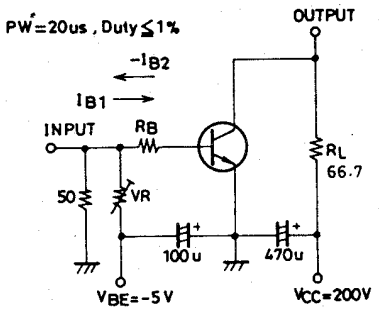

Case Outline 2022
(unit:mm)

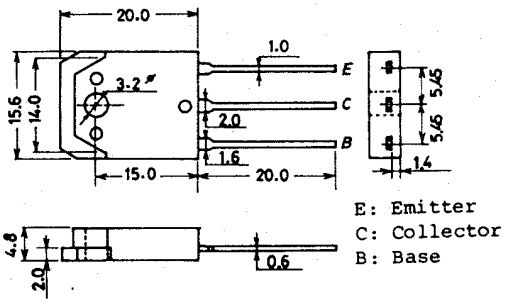

These specifications are subject to change without notice.

TOKYO SANYO ELECTRIC CO., LTD. SEMICONDUCTOR DIVISION
15-13, 6-CHOME, SOTOKANDA, CHIYODA-KU, TOKYO 101 JAPAN