2-A WIDE-INPUT-RANGE STEP-DOWN SWIFT™ CONVERTER

FEATURES

- **Qualified for Automotive Applications**
- **Wide Input Voltage Range: 5.5 V to 36 V**
- **Up to 2-A Continuous (3-A Peak) Output Current**
- **High Efficiency up to 95% Enabled by 110-mΩ Integrated MOSFET Switch**
- **Wide Output Voltage Range: Adjustable Down to 1.22 V With 1.5% Initial Accuracy**
- **Internal Compensation Minimizes External Parts Count**
- **Fixed 500-kHz Switching Frequency for Small Filter Size**
- **Improved Line Regulation and Transient Response by Input Voltage Feed Forward**
- **System Protected by Over Current Limiting, Over Voltage Protection, and Thermal Shutdown**
- **–40°C to 125°C Operating Junction Temperature Range**
- **Available in Small 8-Pin SOIC Package**
- **For SWIFT™ Documentation, Application Notes and Design Software, See the TI Website at www.ti.com/swift**

APPLICATIONS

- **Industrial and Car Audio Power Supplies**
- **Battery Chargers, High-Power LED Supplies**
- **12-V/24-V Distributed Power Systems**

DESCRIPTION

As a member of the SWIFT family of dc/dc regulators, the TPS5420 is a high-output-current PWM converter that integrates a low-resistance high-side N-channel MOSFET. Included on the substrate with the listed features is a high-performance voltage error amplifier that provides tight voltage regulation accuracy under transient conditions, an undervoltage-lockout circuit to prevent start-up until the input voltage reaches 5.5 V, an internally set slow-start circuit to limit inrush currents, and a voltage feed-forward circuit to improve the transient response. Using the ENA pin, shutdown supply current is reduced to 18 µA typically. Other features include an active-high enable, overcurrent limiting, overvoltage protection, and thermal shutdown. To reduce design complexity and external component count, the TPS5420 feedback loop is internally compensated.

The TPS5420 device is available in an easy-to-use 8-pin SOIC package. TI provides evaluation modules and the SWIFT Designer software tool to aid in quickly achieving high-performance power supply designs to meet aggressive equipment development cycles.

Simplified Schematic

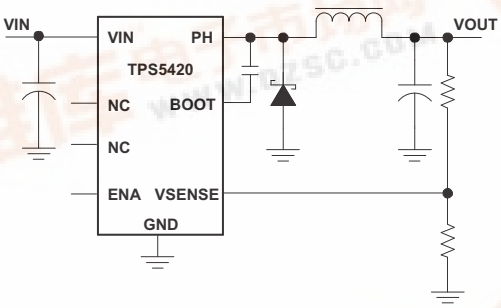

Efficiency vs Output Current

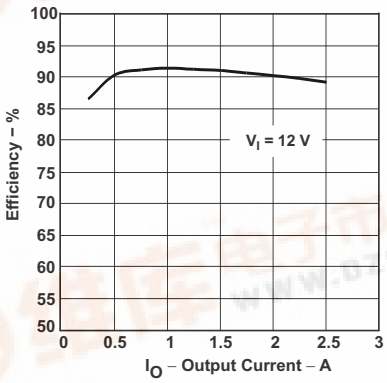

Please be aware that an important notice concerning availability, standard warranty, and use in critical applications of Texas Instruments semiconductor products and disclaimers thereto appears at the end of this data sheet.

SWIFT is a trademark of Texas Instruments.

PRODUCTION DATA information is current as of publication date. Products conform to specifications per the terms of the Texas Instruments standard warranty. Production processing does not necessarily include testing of all parameters.

Copyright © 2007–2008, Texas Instruments Incorporated

查询"TPS5420-Q1"供应商

These devices have limited built-in ESD protection. The leads should be shorted together or the device placed in conductive foam during storage or handling to prevent electrostatic damage to the MOS gates.

ORDERING INFORMATION(1)

T_J	INPUT VOLTAGE	OUTPUT VOLTAGE	PACKAGE(2)	PART NUMBER
–40°C to 125°C	5.5 V to 36 V	Adjustable to 1.22 V	SOIC (D)	TPS5420QDRQ1

(1) For the most current package and ordering information, see the Package Option Addendum at the end of this document, or see the TI web site at www.ti.com.
(2) Package drawings, thermal data, and symbolization are available at www.ti.com/packaging.

ABSOLUTE MAXIMUM RATINGS

over operating free-air temperature range (unless otherwise noted) (1) (2)

V_I	Input voltage range	VIN	–0.3 V to 40 V(3)
		BOOT	–0.3 V to 50 V
		PH (steady-state)	–0.6 V to 40 V(3)
		EN	–0.3 V to 7 V
		VSENSE	–0.3 V to 3 V
		BOOT-PH	10 V
		PH (transient < 10 ns)	–1.2 V
I_O	Source current	PH	Internally limited
I_{lkg}	Leakage current	PH	10 µA
T_J	Operating virtual-junction temperature range		–40°C to 150°C
T_{stg}	Storage temperature range		–65°C to 150°C
ESD	Electrostatic discharge rating	Human-Body Model (HBM)	2000 V
		Machine Model (MM)	150 V

(1) Stresses beyond those listed under *absolute maximum ratings* may cause permanent damage to the device. These are stress ratings only and functional operation of the device at these or any other conditions beyond those indicated under *recommended operating conditions* is not implied. Exposure to absolute-maximum-rated conditions for extended periods may affect device reliability.
(2) All voltage values are with respect to network ground terminal.
(3) Approaching the absolute maximum rating for the VIN pin may cause the voltage on the PH pin to exceed the absolute maximum rating.

DISSIPATION RATINGS(1) (2)

PACKAGE	THERMAL IMPEDANCE JUNCTION-TO-AMBIENT
8-pin D (3)	75°C/W

(1) Maximum power dissipation may be limited by overcurrent protection.
(2) Power rating at a specific ambient temperature T_A should be determined with a junction temperature of 125°C. This is the point where distortion starts to substantially increase. Thermal management of the final PCB should strive to keep the junction temperature at or below 125°C for best performance and long-term reliability. See *Thermal Calculations* in applications section of this data sheet for more information.
(3) Test board conditions:
a. 3 in × 3 in, two layers, thickness: 0.062 inch
b. 2-oz. copper traces located on the top and bottom of the PCB

RECOMMENDED OPERATING CONDITIONS

		MIN	MAX	UNIT
V_I	Input voltage range, VIN	5.5	36	V
T_J	Operating junction temperature	–40	125	°C

Copyright © 2007–2008, Texas Instruments Incorporated

查询"TPS5420-Q1"供应商

ELECTRICAL CHARACTERISTICS

T_J = –40°C to 125°C, VIN = 5.5 V to 36 V (unless otherwise noted)

PARAMETER		TEST CONDITIONS	MIN	TYP	MAX	UNIT
SUPPLY VOLTAGE (VIN PIN)						
I_Q	Quiescent current	VSENSE = 2 V, Not switching, PH pin open		3	4.4	mA
		Shutdown, ENA = 0 V		18	50	µA
UNDERVOLTAGE LOCKOUT (UVLO)						
	Start threshold voltage, UVLO			5.3	5.5	V
	Hysteresis voltage, UVLO			330		mV
VOLTAGE REFERENCE						
	Voltage reference accuracy	T_J = 25°C	1.202	1.221	1.239	V
		I_O = 0 A to 2 A	1.196	1.221	1.245	
OSCILLATOR						
	Internally set free-running frequency		400	500	600	kHz
	Minimum controllable on time			150	200	ns
	Maximum duty cycle		87%	89%		
ENABLE (ENA PIN)						
	Start threshold voltage, ENA				1.3	V
	Stop threshold voltage, ENA		0.5			V
	Hysteresis voltage, ENA			450		mV
	Internal slow-start time (0 ~ 100%)		5.4	8	10	ms
CURRENT LIMIT						
	Current limit		3	4	6.5	A
	Current-limit hiccup time		13	16	21	ms
THERMAL SHUTDOWN						
	Thermal shutdown trip point		135	162		°C
	Thermal shutdown hysteresis			14		°C
OUTPUT MOSFET						
$r_{DS(on)}$	High-side power MOSFET switch	VIN = 5.5 V		150		mΩ
		VIN = 10 V to 36 V		110	230	

Copyright © 2007–2008, Texas Instruments Incorporated

查询"TPS5420-Q1"供应商

PIN ASSIGNMENTS

D PACKAGE
(TOP VIEW)

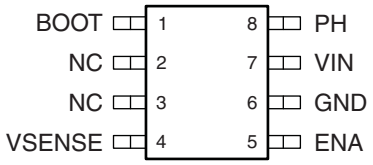

TERMINAL FUNCTIONS

TERMINAL		DESCRIPTION
NAME	NO.	
BOOT	1	Boost capacitor for the high-side FET gate driver. Connect 0.01-µF low ESR capacitor from BOOT pin to PH pin.
NC	2, 3	Not connected internally
VSENSE	4	Feedback voltage for the regulator. Connect to output voltage divider.
ENA	5	On/off control. Below 0.5 V, the device stops switching. Float the pin to enable.
GND	6	Ground
VIN	7	Input supply voltage. Bypass VIN pin to GND pin close to device package with a high-quality low-ESR ceramic capacitor.
PH	8	Source of the high-side power MOSFET. Connected to external inductor and diode.

Copyright © 2007–2008, Texas Instruments Incorporated

查询"TPS5420-Q1"供应商

TYPICAL CHARACTERISTICS

OSCILLATOR FREQUENCY vs JUNCTION TEMPERATURE

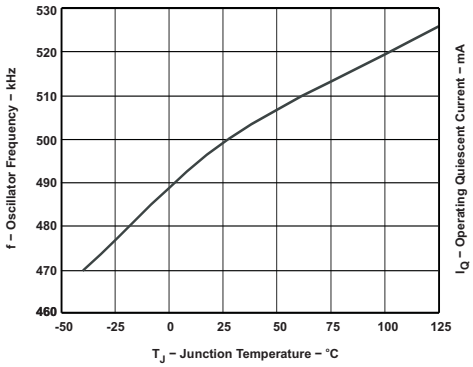

Figure 1.

OPERATING QUIESCENT CURRENT vs JUNCTION TEMPERATURE

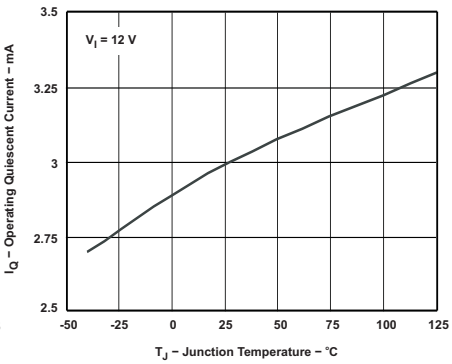

Figure 2.

MINIMUM CONTROLLABLE ON TIME vs JUNCTION TEMPERATURE

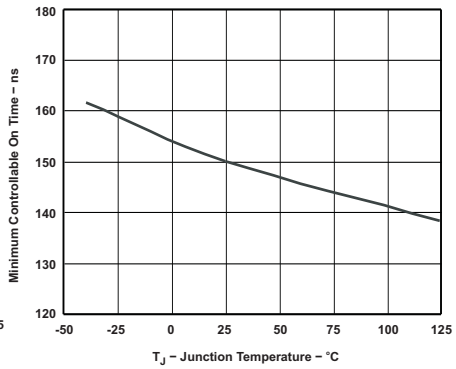

Figure 3.

VOLTAGE REFERENCE vs JUNCTION TEMPERATURE

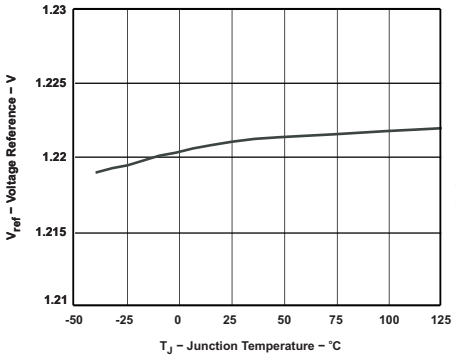

Figure 4.

ON-STATE RESISTANCE vs JUNCTION TEMPERATURE

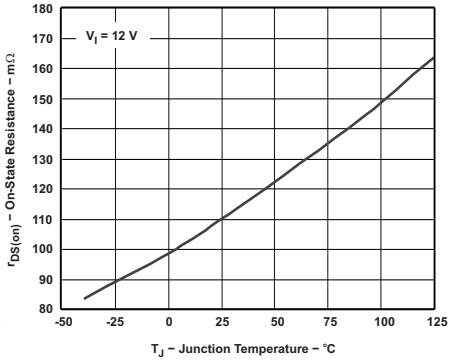

Figure 5.

INTERNAL SLOW START TIME vs JUNCTION TEMPERATURE

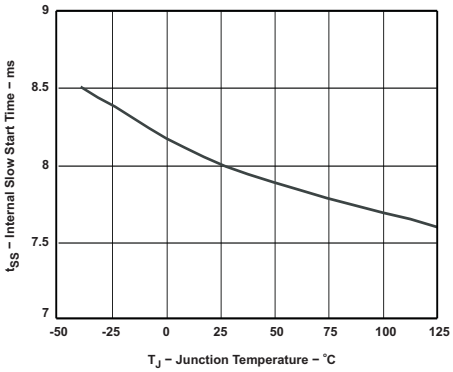

Figure 6.

SHUTDOWN QUIESCENT CURRENT vs INPUT VOLTAGE

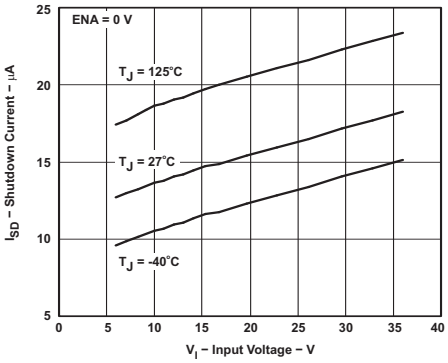

Figure 7.

MINIMUM CONTROLLABLE DUTY RATIO vs JUNCTION TEMPERATURE

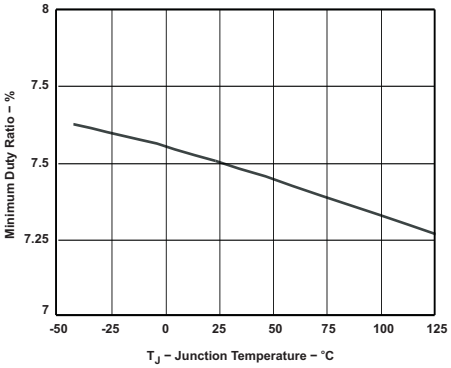

Figure 8.

查询"TPS5420-Q1"供应商

APPLICATION INFORMATION

FUNCTIONAL BLOCK DIAGRAM

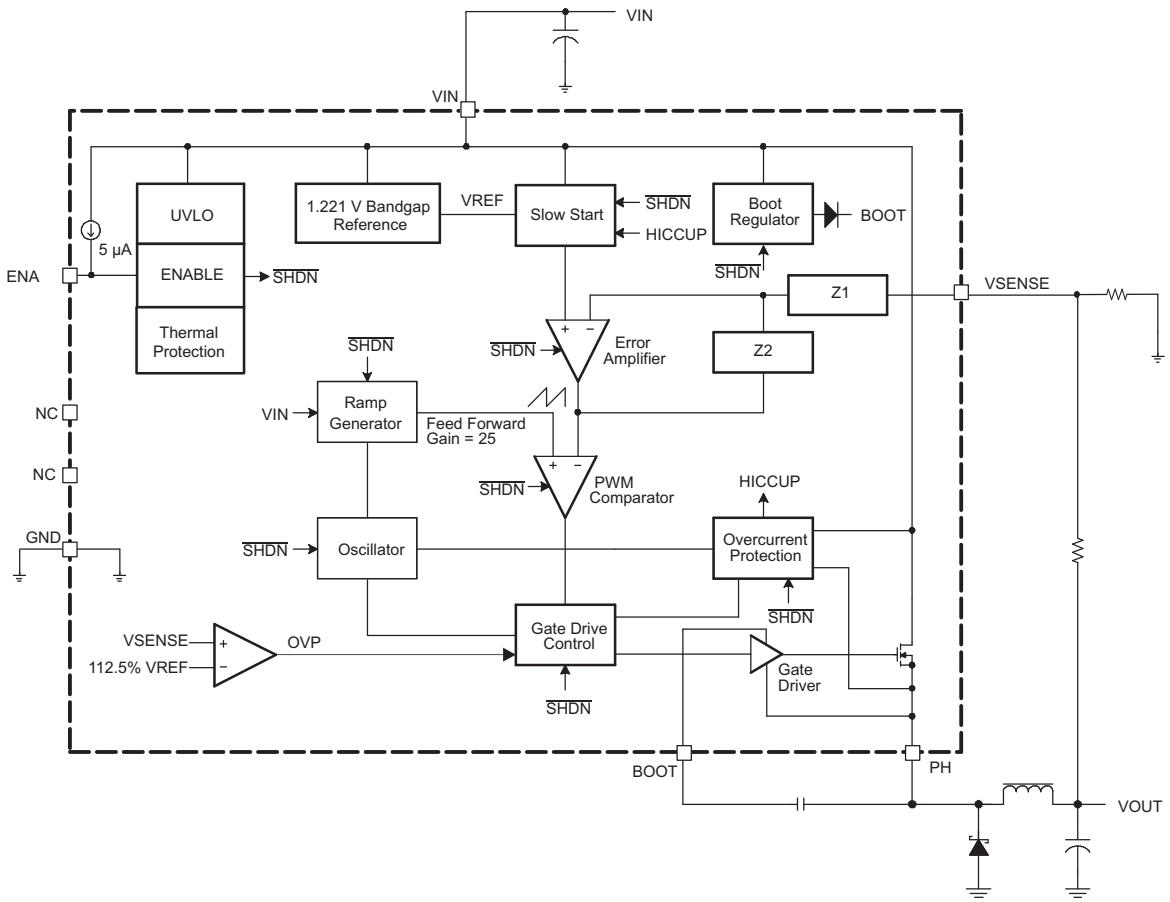

DETAILED DESCRIPTION

Oscillator Frequency

The internal free running oscillator sets the PWM switching frequency at 500 kHz. The 500-kHz switching frequency allows less output inductance for the same output ripple requirement resulting in a smaller output inductor.

Voltage Reference

The voltage reference system produces a precision reference signal by scaling the output of a temperature stable bandgap circuit. The bandgap and scaling circuits are trimmed during production testing to an output of 1.221 V at room temperature.

Enable (ENA) and Internal Slow Start

The ENA pin provides electrical on/off control of the regulator. Once the ENA pin voltage exceeds the threshold voltage, the regulator starts operation and the internal slow start begins to ramp. If the ENA pin voltage is pulled below the threshold voltage, the regulator stops switching and the internal slow start resets. Connecting the pin to ground or to any voltage less than 0.5 V disables the regulator and activates the shutdown mode. The quiescent current of the TPS5420 in shutdown mode is typically 18 µA.

Copyright © 2007–2008, Texas Instruments Incorporated

查询"TPS5420-Q1"供应商

The ENA pin has an internal pullup current source, allowing the user to float the ENA pin. If an application requires controlling the ENA pin, use open-drain or open-collector output logic to interface with the pin. To limit the start-up inrush current, an internal slow start circuit is used to ramp up the reference voltage from 0 V to its final value linearly. The internal slow start time is 8 ms typically.

Undervoltage Lockout (UVLO)

The TPS5420 incorporates a UVLO circuit to keep the device disabled when VIN (the input voltage) is below the UVLO start voltage threshold. During power up, internal circuits are held inactive and the internal slow start is grouded until VIN exceeds the UVLO start threshold voltage. Once the UVLO start threshold voltage is reached, the internal slow start is released and device start-up begins. The device operates until VIN falls below the UVLO stop threshold voltage. The typical hysteresis in the UVLO comparator is 330 mV.

Boost Capacitor (BOOT)

Connect a 0.01-µF low-ESR ceramic capacitor between the BOOT pin and PH pin. This capacitor provides the gate drive voltage for the high-side MOSFET. X7R or X5R grade dielectrics are recommended due to their stable values over temperature.

Output Feedback (VSENSE)

The output voltage of the regulator is set by feeding back the center point voltage of an external resistor divider network to the VSENSE pin. In steady-state operation, the VSENSE pin voltage should be equal to the voltage reference 1.221 V.

Internal Compensation

The TPS5420 implements internal compensation to simplify the regulator design. Since the TPS5420 uses voltage-mode control, a type-3 compensation network has been designed on chip to provide a high crossover frequency and a high phase margin for good stability. See *Internal Compensation Network* in the *Advanced Information* section for more details.

Voltage Feed Forward

The internal voltage feed forward provides a constant DC power stage gain despite any variations with the input voltage. This greatly simplifies the stability analysis and improves the transient response. Voltage feed forward varies the peak ramp voltage inversely with the input voltage so that the modulator and power stage gain are constant at the feed forward gain, i.e.:

$$\text{Feed Forward Gain} = \frac{\text{VIN}}{\text{Ramp}_{\text{pk-pk}}} \tag{1}$$

The typical feed forward gain of TPS5420 is 25.

Pulse-Width-Modulation (PWM) Control

The regulator employs a fixed-frequency PWM control method. First, the feedback voltage (VSENSE pin voltage) is compared to the constant voltage reference by the high-gain error amplifier and compensation network to produce a error voltage. Then, the error voltage is compared to the ramp voltage by the PWM comparator. In this way, the error voltage magnitude is converted to a pulse width that is the duty cycle. Finally, the PWM output is fed into the gate drive circuit to control the on time of the high-side MOSFET.

Overcurrent Limiting

Overcurrent limiting is implemented by sensing the drain-to-source voltage across the high-side MOSFET. The drain-to-source voltage is then compared to a voltage level representing the overcurrent threshold limit. If the drain-to-source voltage exceeds the overcurrent threshold limit, the overcurrent indicator is set true. The system ignores the overcurrent indicator for the leading-edge blanking time at the beginning of each cycle to avoid any turn-on noise glitches.

Once overcurrent indicator is set true, overcurrent limiting is triggered. The high-side MOSFET is turned off for the rest of the cycle after a propagation delay. The overcurrent limiting scheme is called cycle-by-cycle current limiting.

Copyright © 2007–2008, Texas Instruments Incorporated

查询"TPS5420-Q1"供应商

Sometimes, under serious overload conditions such as short-circuit, the overcurrent runaway may still occur when using cycle-by-cycle current limiting. A second mode of current limiting is used, i.e., hiccup mode overcurrent limiting. During hiccup mode overcurrent limiting, the voltage reference is grounded and the high-side MOSFET is turned off for the hiccup time. Once the hiccup time duration is complete, the regulator restarts under control of the slow start circuit.

Overvoltage Protection (OVP)

The TPS5420 has an OVP circuit to minimize voltage overshoot when recovering from output fault conditions. The OVP circuit includes an overvoltage comparator to compare the VSENSE pin voltage and a threshold of 112.5% × VREF. Once the VSENSE pin voltage is higher than the threshold, the high-side MOSFET is forced off. When the VSENSE pin voltage drops lower than the threshold, the high-side MOSFET is enabled again.

Thermal Shutdown

The TPS5420 protects itself from overheating with an internal thermal shutdown circuit. If the junction temperature exceeds the thermal shutdown trip point, the voltage reference is grounded and the high-side MOSFET is turned off. The part is restarted under control of the slow start circuit automatically when the junction temperature drops 14°C below the thermal shutdown trip point.

PCB Layout

Connect a low-ESR ceramic bypass capacitor to the VIN pin. Care should be taken to minimize the loop area formed by the bypass capacitor connections, the VIN pin, and the TPS5420 ground pin. The best way to do this is to extend the top-side ground area from under the device adjacent to the VIN trace, and place the bypass capacitor as close as possible to the VIN pin. The minimum recommended bypass capacitance is 4.7-µF ceramic with a X5R or X7R dielectric.

There should be a ground area on the top layer directly underneath the IC to connect the GND pin of the device and the anode of the catch diode. The GND pin should be tied to the PCB ground by connecting it to the ground area under the device as shown in Figure 9.

The PH pin should be routed to the output inductor, catch diode and boot capacitor. Since the PH connection is the switching node, the inductor should be located close to the PH pin, and the area of the PCB conductor minimized to prevent excessive capacitive coupling. The catch diode should also be placed close to the device to minimize the output current loop area. Connect the boot capacitor between the phase node and the BOOT pin as shown. Keep the boot capacitor close to the IC and minimize the conductor trace lengths. The component placements and connections shown work well, but other connection routings may also be effective.

Connect the output filter capacitor(s) as shown between the VOUT trace and GND. It is important to keep the loop formed by the PH pin, Lout, Cout, and GND as small as is practical.

Connect the VOUT trace to the VSENSE pin using the resistor divider network to set the output voltage. Do not route this trace too close to the PH trace. Due to the size of the IC package and the device pinout, the trace may need to be routed under the output capacitor. The routing may be done on an alternate layer if a trace under the output capacitor is not desired.

If using the grounding scheme shown in Figure 9, use a via connection to a different layer to route to the ENA pin.

Copyright © 2007–2008, Texas Instruments Incorporated

查询"TPS5420-Q1"供应商

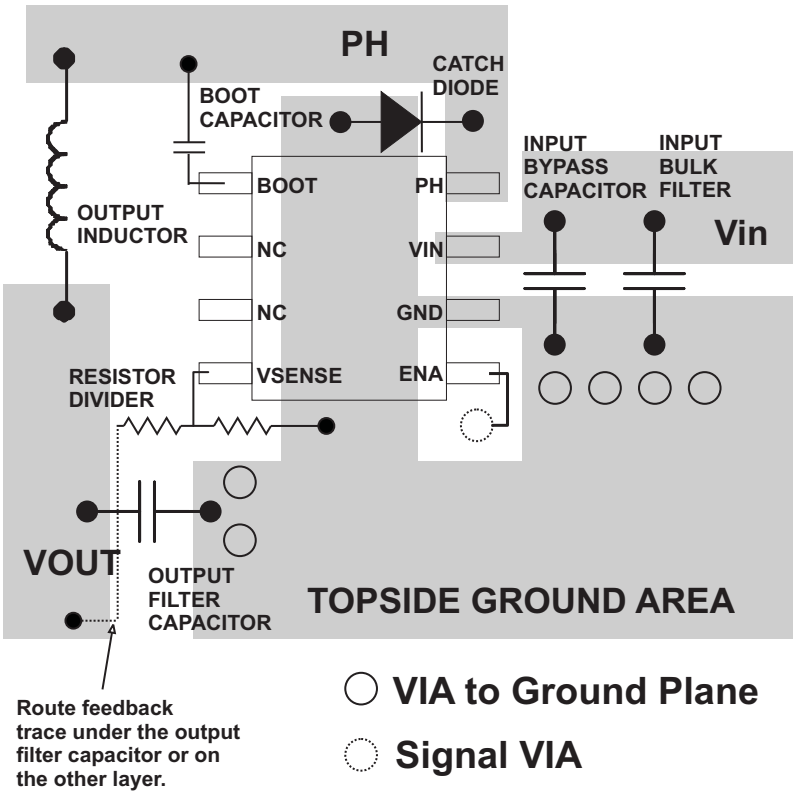

Figure 9. Design Layout

查询"TPS5420-Q1"供应商

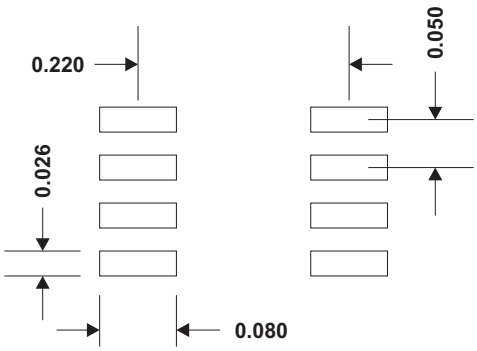

All dimensions in inches

Figure 10. TPS5420 Land Pattern

Application Circuits

Figure 11 shows the schematic for a typical TPS5420 application. The TPS5420 can provide up to 2-A output current at a nominal output voltage of 5 V.

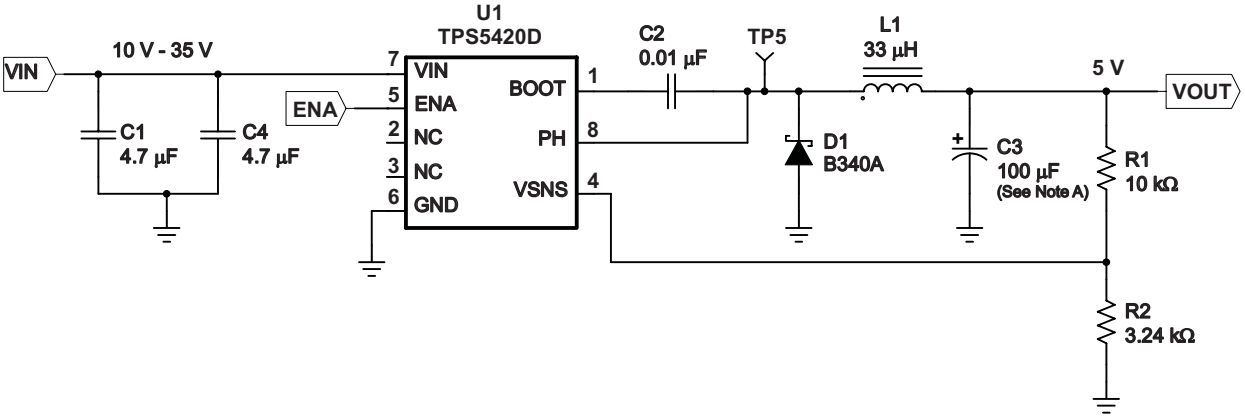

A. C3 = Tantalum AVX TPSD107M010R0080

Figure 11. Application Circuit, 10-V to 35-V Input to 5-V Output

Copyright © 2007–2008, Texas Instruments Incorporated

查询"TPS5420-Q1"供应商

Design Procedure

The following design procedure can be used to select component values for the TPS5420. Alternately, the SWIFT Designer Software may be used to generate a complete design. The SWIFT Designer Software uses an iterative design procedure and accesses a comprehensive database of components when generating a design. This section presents a simplified discussion of the design process.

To begin the design process, a few parameters must be determined. The designer must know the following:

- Input voltage range
- Output voltage
- Input ripple voltage
- Output ripple voltage
- Output current rating
- Operating frequency

Design Parameters

For this design example, use the following as the input parameters:

DESIGN PARAMETER(1)	EXAMPLE VALUE
Input voltage range	10 V to 36 V
Output voltage	5 V
Input ripple voltage	300 mV
Output ripple voltage	30 mV
Output current rating	2 A
Operating frequency	500 kHz

(1) As an additional constraint, the design is set up to be small size and low component height.

Switching Frequency

The switching frequency for the TPS5420 is internally set to 500 kHz. It is not possible to adjust the switching frequency.

Input Capacitors

The TPS5420 requires an input decoupling capacitor and, depending on the application, a bulk input capacitor. The recommended value for the decoupling capacitor is 10 µF. A high-quality ceramic type X5R or X7R is required. For some applications, a smaller-value decoupling capacitor may be used, if the input voltage and current ripple ratings are not exceeded. The voltage rating must be greater than the maximum input voltage, including ripple. For this design, two 4.7-µF capacitors, C1 and C4 are used to allow for smaller 1812 case size to be used while maintaining a 50-V rating.

This input ripple voltage can be approximated by Equation 2 :

$$\Delta V_{IN} = \frac{I_{OUT(MAX)} \times 0.25}{C_{BULK} \times f_{SW}} + \left(I_{OUT(MAX)} \times ESR_{MAX}\right) \quad (2)$$

Where $I_{OUT(MAX)}$ is the maximum load current, f_{SW} is the switching frequency, C_I is the input capacitor value, and ESR_{MAX} is the maximum series resistance of the input capacitor.

The maximum RMS ripple current also needs to be checked. For worst-case conditions, this is approximated by Equation 3:

$$I_{CIN} = \frac{I_{OUT(MAX)}}{2} \quad (3)$$

In this case, the calculated input ripple voltage is 118 mV, and the RMS ripple current is 1 A. The maximum voltage across the input capacitors would be VIN max plus delta VIN/2. The chosen input decoupling capacitors are rated for 50 V, and the ripple current capacity for each is 3 A at 500 kHz, providing ample margin. The actual measured input ripple voltage may be larger than the calculated value, due to the output impedance of the input voltage source and parasitics associated with the layout.

查询"TPS5420-Q1"供应商

CAUTION:

The maximum ratings for voltage and current are not to be exceeded under any circumstance.

Additionally, some bulk capacitance may be needed, especially if the TPS5420 circuit is not located within approximately two inches from the input voltage source. The value for this capacitor is not critical, but it should be rated to handle the maximum input voltage including ripple voltage and should filter the output so that input ripple voltage is acceptable.

Output Filter Components

Two components need to be selected for the output filter, L1 and C2. Since the TPS5420 is an internally compensated device, a limited range of filter component types and values can be supported.

Inductor Selection

To calculate the minimum value of the output inductor, use Equation 4:

$$L_{MIN} = \frac{V_{OUT} \times \left(V_{IN(MAX)} - V_{OUT}\right)}{V_{IN(max)} \times K_{IND} \times I_{OUT} \times F_{SW} \times 0.8} \tag{4}$$

K_{IND} is a coefficient that represents the amount of inductor ripple current relative to the maximum output current. Three things need to be considered when determining the amount of ripple current in the inductor: the peak-to-peak ripple current affects the output ripple voltage amplitude, the ripple current affects the peak switch current, and the amount of ripple current determines at what point the circuit becomes discontinuous. For designs using the TPS5420, K_{IND} of 0.2 to 0.3 yields good results. Low output ripple voltages are obtained when paired with the proper output capacitor, the peak switch current is below the current limit set point, and low load currents can be sourced before discontinuous operation.

For this design example, use K_{IND} = 0.2, and the minimum inductor value is 31 µH. The next highest standard value used in this design is 33 µH.

For the output filter inductor, it is important that the RMS current and saturation current ratings not be exceeded. The RMS inductor current is found from Equation 5:

$$I_{L(RMS)} = \sqrt{I^2_{OUT(MAX)} + \frac{1}{12} \times \left(\frac{V_{OUT} \times \left(V_{IN(MAX)} - V_{OUT}\right)}{V_{IN(MAX)} \times L_{OUT} \times F_{SW} \times 0.8}\right)^2} \tag{5}$$

and the peak inductor current is determined from Equation 6:

$$I_{L(PK)} = I_{OUT(MAX)} + \frac{V_{OUT} \times \left(V_{IN(MAX)} - V_{OUT}\right)}{1.6 \times V_{IN(MAX)} \times L_{OUT} \times F_{SW}} \tag{6}$$

For this design, the RMS inductor current is 2.002 A, and the peak inductor current is 2.16 A. The chosen inductor is a Coilcraft MSS1260-333 type. The nominal inductance is 33 µH. It has a saturation current rating of 2.2 A and a RMS current rating of 2.7 A, which meet the requirements. Inductor values for use with the TPS5420 are in the range of 10 µH to 100 µH.

Capacitor Selection

The important design factors for the output capacitor are dc voltage rating, ripple current rating, and equivalent series resistance (ESR). The dc voltage and ripple current ratings cannot be exceeded. The ESR is important because, along with the inductor ripple current, it determines the amount of output ripple voltage. The actual value of the output capacitor is not critical, but some practical limits do exist. Consider the relationship between the desired closed loop crossover frequency of the design and LC corner frequency of the output filter. Due to

Copyright © 2007–2008, Texas Instruments Incorporated

查询"TPS5420-Q1"供应商

the design of the internal compensation, it is recommended to keep the closed-loop crossover frequency in the range 3 kHz to 30 kHz, as this frequency range has adequate phase boost to allow for stable operation. For this design example, the intended closed-loop crossover frequency is between 2590 Hz and 24 kHz and below the ESR zero of the output capacitor. Under these conditions, the closed-loop crossover frequency is related to the LC corner frequency as:

$$f_{CO} = \frac{f_{LC}^{2}}{85\ V_{OUT}} \tag{7}$$

and the desired output capacitor value for the output filter to:

$$C_{OUT} = \frac{1}{3357 \times L_{OUT} \times f_{CO} \times V_{OUT}} \tag{8}$$

For a desired crossover of 18 kHz and a 33-µH inductor, the calculated value for the output capacitor is 100 µF. The capacitor type should be chosen so that the ESR zero is above the loop crossover. The maximum ESR is:

$$ESR_{MAX} = \frac{1}{2\pi \times C_{OUT} \times f_{CO}} \tag{9}$$

The maximum ESR of the output capacitor also determines the amount of output ripple as specified in the initial design parameters. The output ripple voltage is the inductor ripple current times the ESR of the output filter. Check that the maximum specified ESR listed in the capacitor data sheet results in an acceptable output ripple voltage:

$$V_{PP}(MAX) = \frac{ESR_{MAX} \times V_{OUT} \times \left(V_{IN(MAX)} - V_{OUT}\right)}{N_C \times V_{IN(MAX)} \times L_{OUT} \times F_{SW} \times 0.8} \tag{10}$$

Where:

ΔV_{PP} is the desired peak-to-peak output ripple.

N_C is the number of parallel output capacitors.

F_{SW} is the switching frequency.

The minimum ESR of the output capacitor should also be considered. For a good phase margin, if the ESR is zero when the ESR is at its minimum, it should not be above the internal compensation poles at 24 kHz and 54 kHz.

The selected output capacitor must also be rated for a voltage greater than the desired output voltage plus one-half the ripple voltage. Any derating amount must also be included. The maximum RMS ripple current in the output capacitor is given by Equation 11:

$$I_{COUT(RMS)} = \frac{1}{\sqrt{12}} \times \left[\frac{V_{OUT} \times \left(V_{IN(MAX)} - V_{OUT}\right)}{V_{IN(MAX)} \times L_{OUT} - F_{SW} \times 0.8 \times N_C}\right] \tag{11}$$

Where:

N_C is the number of output capacitors in parallel.

F_{SW} is the switching frequency.

For this design example, a single 100-µF output capacitor is chosen for C3. The calculated RMS ripple current is 143 mA and the maximum ESR required is 88 mΩ. A capacitor that meets these requirements is a AVX TPSD107M010R0080, rated at 10 V with a maximum ESR of 80 mΩ and a ripple current rating of 1.369 A. This capacitor results in a peak-to-peak output ripple of 26 mV using equation 10. An additional small 0.1-µF ceramic bypass capacitor may also used, but is not included in this design.

Other capacitor types can be used with the TPS5420, depending on the needs of the application.

查询"TPS5420-Q1"供应商

Output Voltage Setpoint

The output voltage of the TPS5420 is set by a resistor divider (R1 and R2) from the output to the VSENSE pin. Calculate the R2 resistor value for the output voltage of 5 V using Equation 12:

$$R2 = \frac{R1 \times 1.221}{V_{OUT} - 1.221} \tag{12}$$

For any TPS5420 design, start with an R1 value of 10 kΩ. R2 is then 3.24 kΩ.

Boot Capacitor

The boot capacitor should be 0.01 µF.

Catch Diode

The TPS5420 is designed to operate using an external catch diode between PH and GND. The selected diode must meet the absolute maximum ratings for the application: reverse voltage must be higher than the maximum voltage at the PH pin, which is VINMAX + 0.5 V. Peak current must be greater than IOUTMAX plus one-half the peak-to-peak inductor current. Forward voltage drop should be small for higher efficiencies. It is important to note that the catch diode conduction time is typically longer than the high-side FET on time; therefore, the diode parameters improve the overall efficiency. Additionally, check that the device chosen is capable of dissipating the power losses. For this design, a Diodes, Inc. B340A is chosen, with a reverse voltage of 40 V, forward current of 3 A, and a forward voltage drop of 0.5 V.

Additional Circuits

Figure 12 shows an application circuit using a wide input voltage range. The design parameters are similar to those given for the design example, with a larger value output inductor and a lower closed-loop crossover frequency.

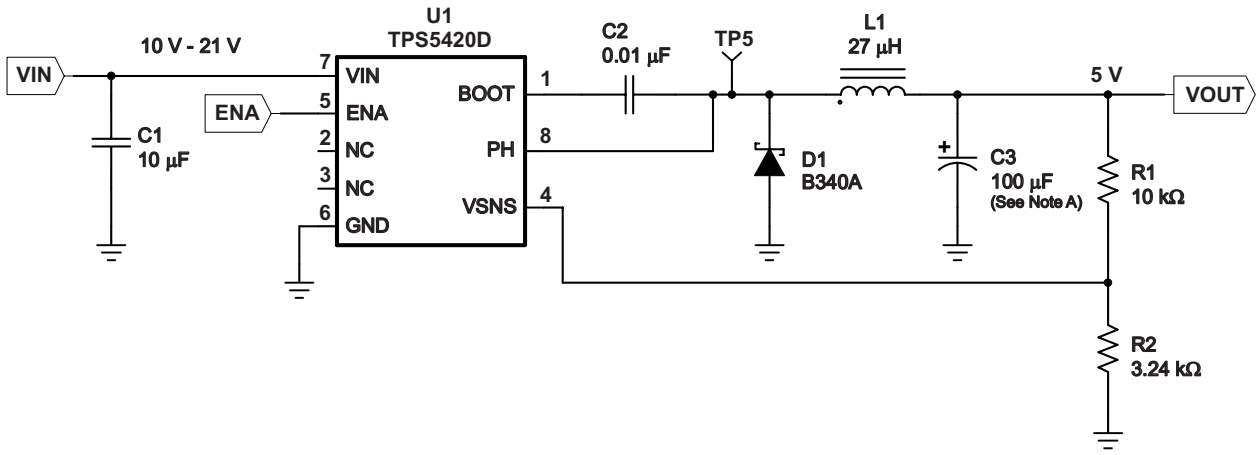

A. C3 = Tantalum AVX TPSD107M010R0080

Figure 12. 10-V to 21-V Input to 5-V Output Application Circuit

Circuit Using Ceramic Output Filter Capacitors

Figure 13 shows an application circuit using all ceramic capacitors for the input and output filters that generates a 3.3-V output from a 10-V to 24-V input. The design procedure is similar to those given for the design example, except for the selection of the output filter capacitor values and the design of the additional compensation components required to stabilize the circuit.

 Copyright © 2007–2008, Texas Instruments Incorporated

查询"TPS5420-Q1"供应商

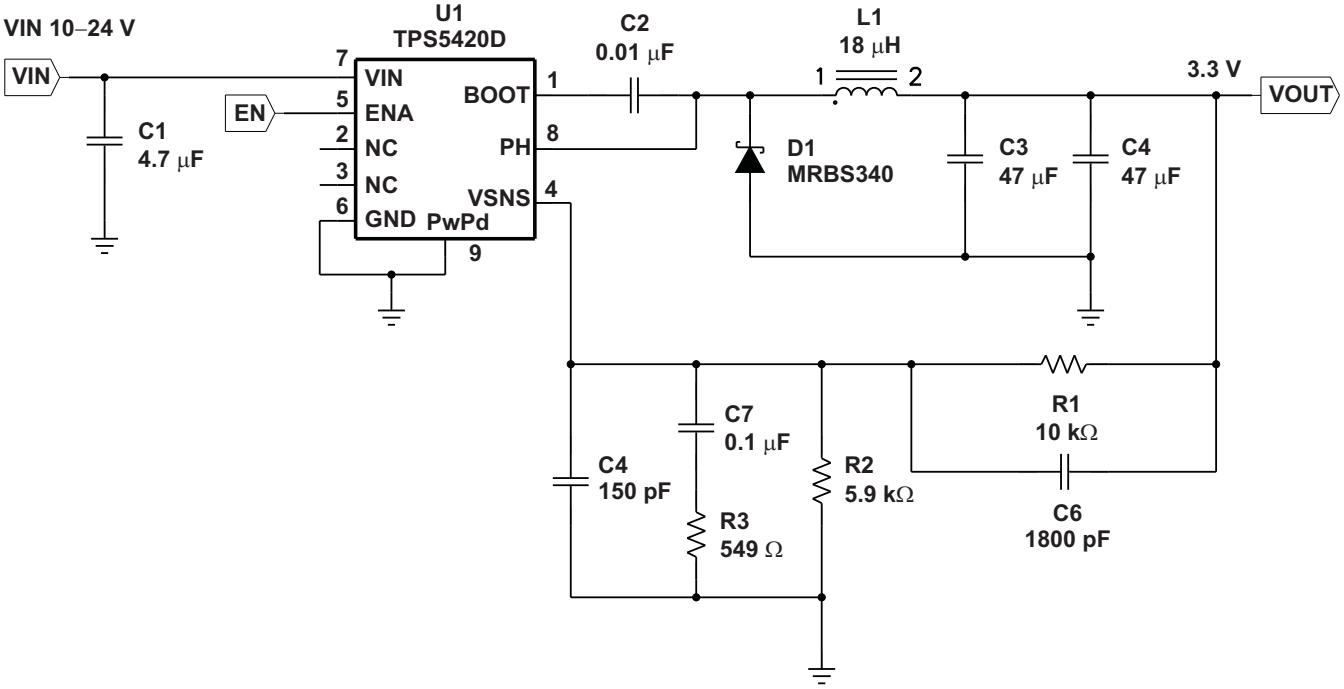

Figure 13. Ceramic Output Filter Capacitors Circuit

Output Filter Component Selection

Using Equation 11, the minimum inductor value is 17.9 µH. A value of 18 µH is chosen for this design.

When using ceramic output filter capacitors, the recommended LC resonant frequency should be no more than 7 kHz. Since the output inductor is already selected at 18 µH, this limits the minimum output capacitor value to:

$$C_O\,(MIN) \geq \frac{1}{(2\pi \times 7000)^2 \times L_O} \tag{13}$$

The minimum capacitor value is calculated to be 29 µF. For this circuit a larger value of capacitor yields better transient response. Two 47-µF output capacitors are used for C3 and C4. It is important to note that the actual capacitance of ceramic capacitors decreases with applied voltage. In this example, the output voltage is set to 3.3 V, minimizing this effect.

External Compensation Network

When using ceramic output capacitors, additional circuitry is required to stabilize the closed-loop system. For this circuit, the external components are R3, C5, C6, and C7. To determine the value of these components, first calculate the LC resonant frequency of the output filter:

$$F_{LC} = \frac{1}{2\pi\sqrt{L_O \times C_O\,(EFF)}} \tag{14}$$

For this example, the effective resonant frequency is calculated as 4109 Hz.

查询"TPS5420-Q1"供应商

The network composed of R1, R2, R3, C5, C6, and C7 has two poles and two zeros that are used to tailor the overall response of the feedback network to accommodate the use of the ceramic output capacitors. The pole and zero locations are given by the following equations:

$$Fp1 = 500000 \times \frac{V_O}{F_{LC}} \tag{15}$$

$$Fz1 = 0.7 \times F_{LC} \tag{16}$$

$$Fz2 = 2.5 \times F_{LC} \tag{17}$$

The final pole is located at a frequency too high to be of concern. The second zero, Fz2 as defined by Equation 17 uses 2.5 for the frequency multiplier. In some cases this may need to be slightly higher or lower. Values in the range of 2.3 to 2.7 work well. The values for R1 and R2 are fixed by the 3.3-V output voltage as calculated usingEquation 12. For this design R1 = 10 kΩ and R2 = 5.90 kΩ. With Fp1 = 426 Hz, Fz1 = 2708 Hz and Fz2 = 8898 Hz, the values of R3, C6 and C7 are determined using Equation 18, Equation 19, and Equation 20:

$$C7 = \frac{1}{2\pi \times Fp1 \times (R1 \parallel R2)} \tag{18}$$

$$R3 = \frac{1}{2\pi \times Fz1 \times C7} \tag{19}$$

$$C6 = \frac{1}{2\pi \times Fz2 \times R1} \tag{20}$$

For this design, using the closest standard values, C7 is 0.1 µF, R3 is 590 Ω, and C6 is 1800 pF. C5 is added to improve load regulation performance. It is effectively in parallel with C6 in the location of the second pole frequency, so it should be small in relationship to C6. C5 should be less the 1/10 the value of C6. For this example, 150 pF works well.

For additional information on external compensation of the TPS5420 or other wide voltage range SWIFT devices, see *Using TPS5410/20/30/31 With Aluminum/Ceramic Output Capacitors* (TI literature number SLVA237).

ADVANCED INFORMATION

Output Voltage Limitations

Due to the internal design of the TPS5420, there are both upper and lower output voltage limits for any given input voltage. The upper limit of the output voltage set point is constrained by the maximum duty cycle of 87% and is given by:

$$V_{OUTMAX} = 0.87 \times \left(\left(V_{INMIN} - I_{OMAX} \times 0.230\right) + V_D\right) - \left(I_{OMAX} \times R_L\right) - V_D \tag{21}$$

Where:

V_{INMIN} is the minimum input voltage.
I_{OMAX} is the maximum load current.
V_D is the catch diode forward voltage.
R_L is the output inductor series resistance.

This equation assumes maximum on resistance for the internal high side FET.

 Copyright © 2007–2008, Texas Instruments Incorporated

查询"TPS5420-Q1"供应商

The lower limit is constrained by the minimum controllable on time, which may be as high as 200 ns. The approximate minimum output voltage for a given input voltage and minimum load current is given by:

$$V_{OUTMIN} = 0.12 \times \left(\left(V_{INMAX} - I_{OMIN} \times 0.110\right) + V_D\right) - \left(I_{OMIN} \times R_L\right) - V_D \quad (22)$$

Where:

V_{INMAX} is the maximum input voltage.

I_{OMIN} is the minimum load current.

V_D is the catch diode forward voltage.

R_L is the output inductor series resistance.

This equation assumes nominal on resistance for the high-side FET and accounts for worst-case variation of operating frequency set point. Any design operating near the operational limits of the device should be checked to ensure proper functionality.

Internal Compensation Network

The design equations given in the example circuit can be used to generate circuits using the TPS5420. These designs are based on certain assumptions, and always select output capacitors within a limited range of ESR values. If a different capacitor type is desired, it may be possible to fit one to the internal compensation of the TPS5420. Equation 23 gives the nominal frequency response of the internal voltage-mode type-3 compensation network:

$$H(s) = \frac{\left(1 + \frac{s}{2\pi \times Fz1}\right) \times \left(1 + \frac{s}{2\pi \times Fz2}\right)}{\left(\frac{s}{2\pi \times Fp0}\right) \times \left(1 + \frac{s}{2\pi \times Fp1}\right) \times \left(1 + \frac{s}{2\pi \times Fp2}\right) \times \left(1 + \frac{s}{2\pi \times Fp3}\right)} \quad (23)$$

Where

Fp0 = 2165 Hz, Fz1 = 2170 Hz, Fz2 = 2590 Hz

Fp1 = 24 kHz, Fp2 = 54 kHz, Fp3 = 440 kHz

Fp3 represents the non-ideal parasitics effect.

Using this information along with the desired output voltage, feed-forward gain, and output filter characteristics, the closed-loop transfer function can be derived.

Thermal Calculations

The following formulas show how to estimate the device power dissipation under continuous conduction mode operations. They should not be used if the device is working at light loads in the discontinuous conduction mode.

Conduction Loss: $Pcon = I_{OUT}^2 \times Rds(on) \times V_{OUT}/V_{IN}$

Switching Loss: $Psw = V_{IN} \times I_{OUT} \times 0.01$

Quiescent Current Loss: $Pq = V_{IN} \times 0.01$

Total Loss: $Ptot = Pcon + Psw + Pq$

Given T_A => Estimated Junction Temperature: $T_J = T_A + Rth \times Ptot$

Given T_{JMAX} = 125°C => Estimated Maximum Ambient Temperature: $T_{AMAX} = T_{JMAX} - Rth \times Ptot$

查询"TPS5420-Q1"供应商

PERFORMANCE GRAPHS

The performance graphs (Figure 14 through Figure 20) are applicable to the circuit in Figure 11, T_A = 25°C (unless otherwise specified)

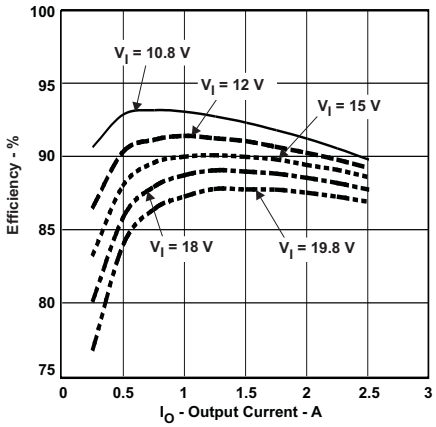

Figure 14. Efficiency vs Output Current

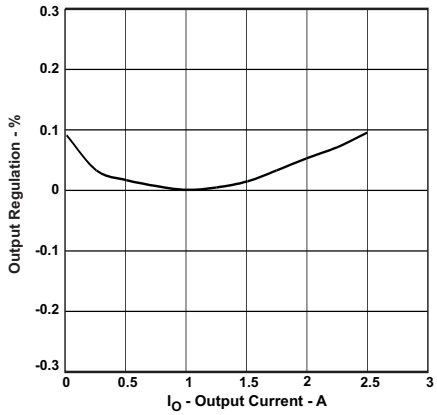

Figure 15. Output Regulation vs Output Current

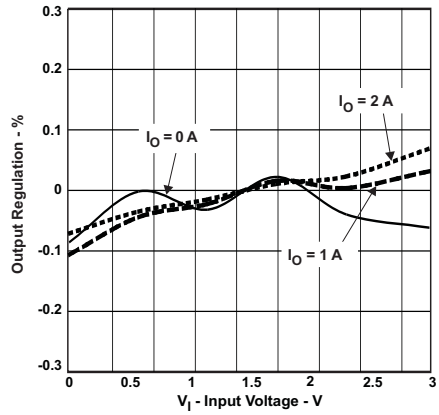

Figure 16. Input Regulation vs Input Voltage

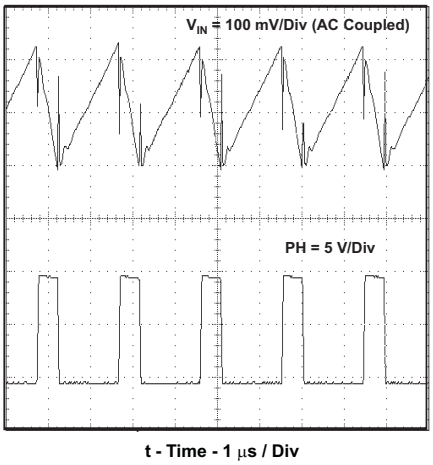

Figure 17. Input Voltage Ripple and PH Node, I_O = 3 A

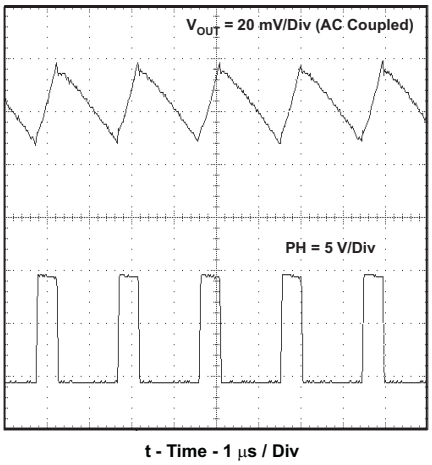

Figure 18. Output Voltage Ripple and PH Node, I_O = 3 A

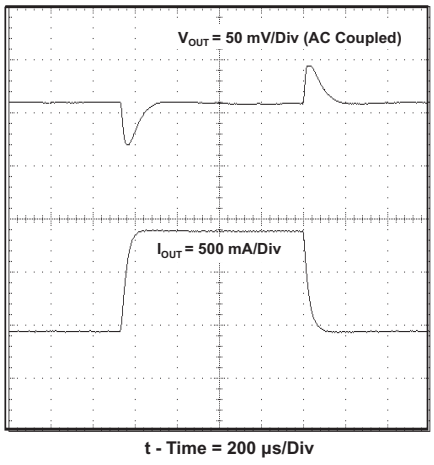

Figure 19. Transient Response, I_O Step 0.5 to 1.5 A

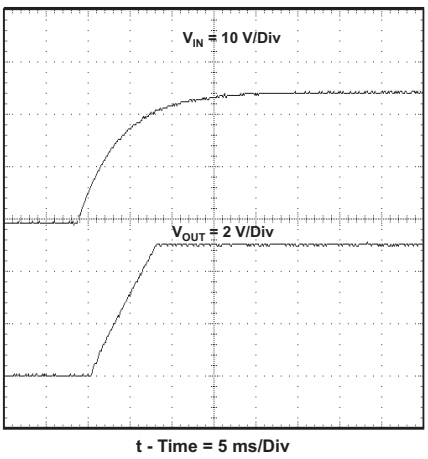

Figure 20. Startup Waveform, V_{IN} and V_{OUT}

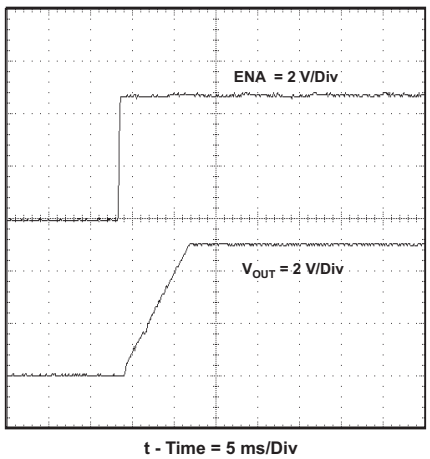

Figure 21. Startup Waveform, ENA and V_{OUT}

Copyright © 2007–2008, Texas Instruments Incorporated

查询"TPS5420-Q1"供应商

PACKAGING INFORMATION

Orderable Device	Status [1]	Package Type	Package Drawing	Pins	Package Qty	Eco Plan [2]	Lead/Ball Finish	MSL Peak Temp [3]
TPS5420QDRQ1	ACTIVE	SOIC	D	8	2500	Green (RoHS & no Sb/Br)	CU NIPDAU	Level-1-260C-UNLIM

[1] The marketing status values are defined as follows:
ACTIVE: Product device recommended for new designs.
LIFEBUY: TI has announced that the device will be discontinued, and a lifetime-buy period is in effect.
NRND: Not recommended for new designs. Device is in production to support existing customers, but TI does not recommend using this part in a new design.
PREVIEW: Device has been announced but is not in production. Samples may or may not be available.
OBSOLETE: TI has discontinued the production of the device.

[2] Eco Plan - The planned eco-friendly classification: Pb-Free (RoHS), Pb-Free (RoHS Exempt), or Green (RoHS & no Sb/Br) - please check http://www.ti.com/productcontent for the latest availability information and additional product content details.
TBD: The Pb-Free/Green conversion plan has not been defined.
Pb-Free (RoHS): TI's terms "Lead-Free" or "Pb-Free" mean semiconductor products that are compatible with the current RoHS requirements for all 6 substances, including the requirement that lead not exceed 0.1% by weight in homogeneous materials. Where designed to be soldered at high temperatures, TI Pb-Free products are suitable for use in specified lead-free processes.
Pb-Free (RoHS Exempt): This component has a RoHS exemption for either 1) lead-based flip-chip solder bumps used between the die and package, or 2) lead-based die adhesive used between the die and leadframe. The component is otherwise considered Pb-Free (RoHS compatible) as defined above.
Green (RoHS & no Sb/Br): TI defines "Green" to mean Pb-Free (RoHS compatible), and free of Bromine (Br) and Antimony (Sb) based flame retardants (Br or Sb do not exceed 0.1% by weight in homogeneous material)

[3] MSL, Peak Temp. -- The Moisture Sensitivity Level rating according to the JEDEC industry standard classifications, and peak solder temperature.

Important Information and Disclaimer: The information provided on this page represents TI's knowledge and belief as of the date that it is provided. TI bases its knowledge and belief on information provided by third parties, and makes no representation or warranty as to the accuracy of such information. Efforts are underway to better integrate information from third parties. TI has taken and continues to take reasonable steps to provide representative and accurate information but may not have conducted destructive testing or chemical analysis on incoming materials and chemicals. TI and TI suppliers consider certain information to be proprietary, and thus CAS numbers and other limited information may not be available for release.

In no event shall TI's liability arising out of such information exceed the total purchase price of the TI part(s) at issue in this document sold by TI to Customer on an annual basis.

OTHER QUALIFIED VERSIONS OF TPS5420-Q1 :
- Catalog: TPS5420
- Enhanced Product: TPS5420-EP

NOTE: Qualified Version Definitions:
- Catalog - TI's standard catalog product
- Enhanced Product - Supports Defense, Aerospace and Medical Applications

查询"TPS5420-Q1"供应商

D (R–PDSO–G8) PLASTIC SMALL–OUTLINE PACKAGE

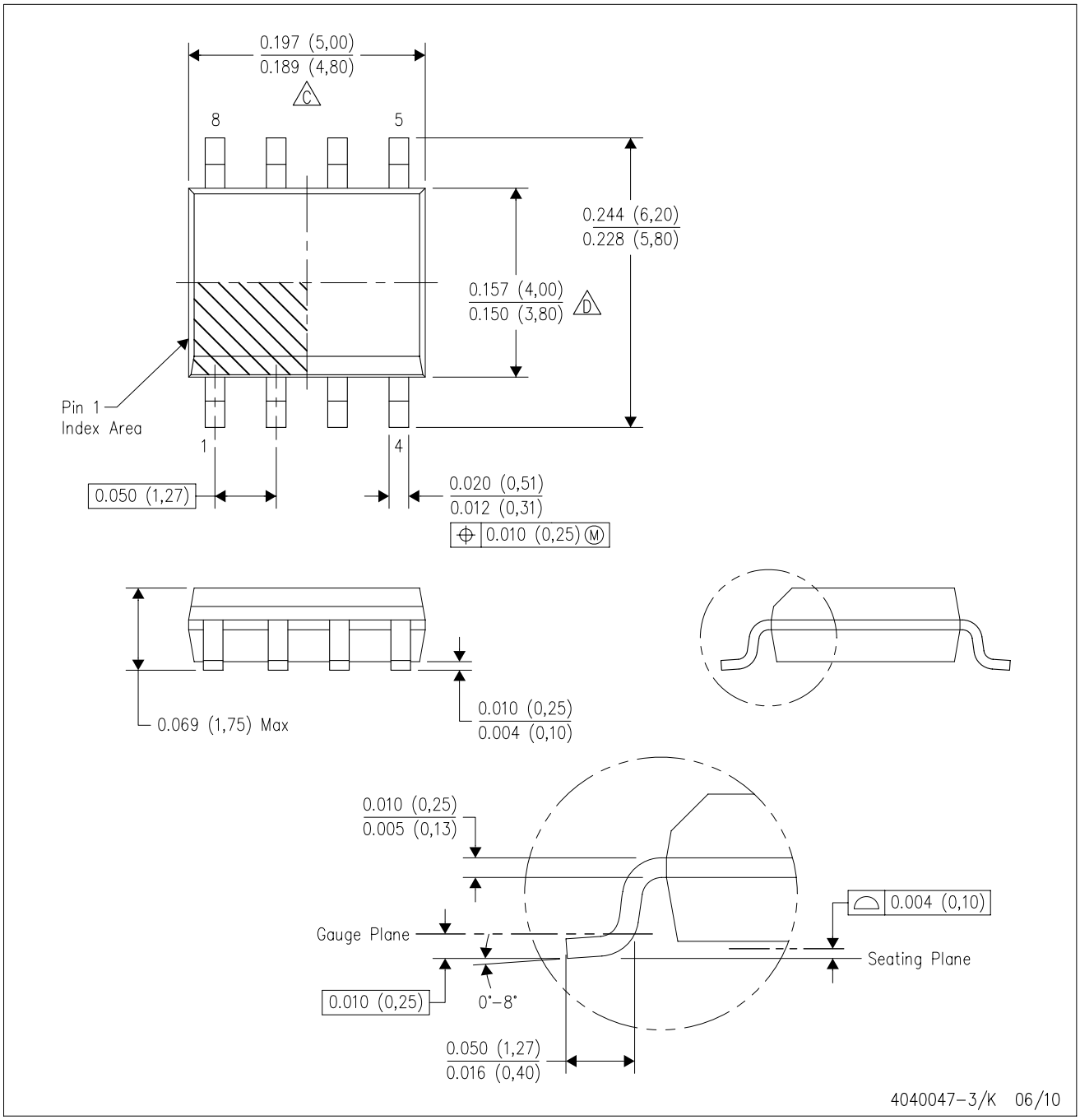

NOTES:
- A. All linear dimensions are in inches (millimeters).
- B. This drawing is subject to change without notice.
- C. Body length does not include mold flash, protrusions, or gate burrs. Mold flash, protrusions, or gate burrs shall not exceed .006 (0,15) per end.
- D. Body width does not include interlead flash. Interlead flash shall not exceed .017 (0,43) per side.
- E. Reference JEDEC MS–012 variation AA.

查询"TPS5420-Q1"供应商

D (R–PDSO–G8) PLASTIC SMALL OUTLINE

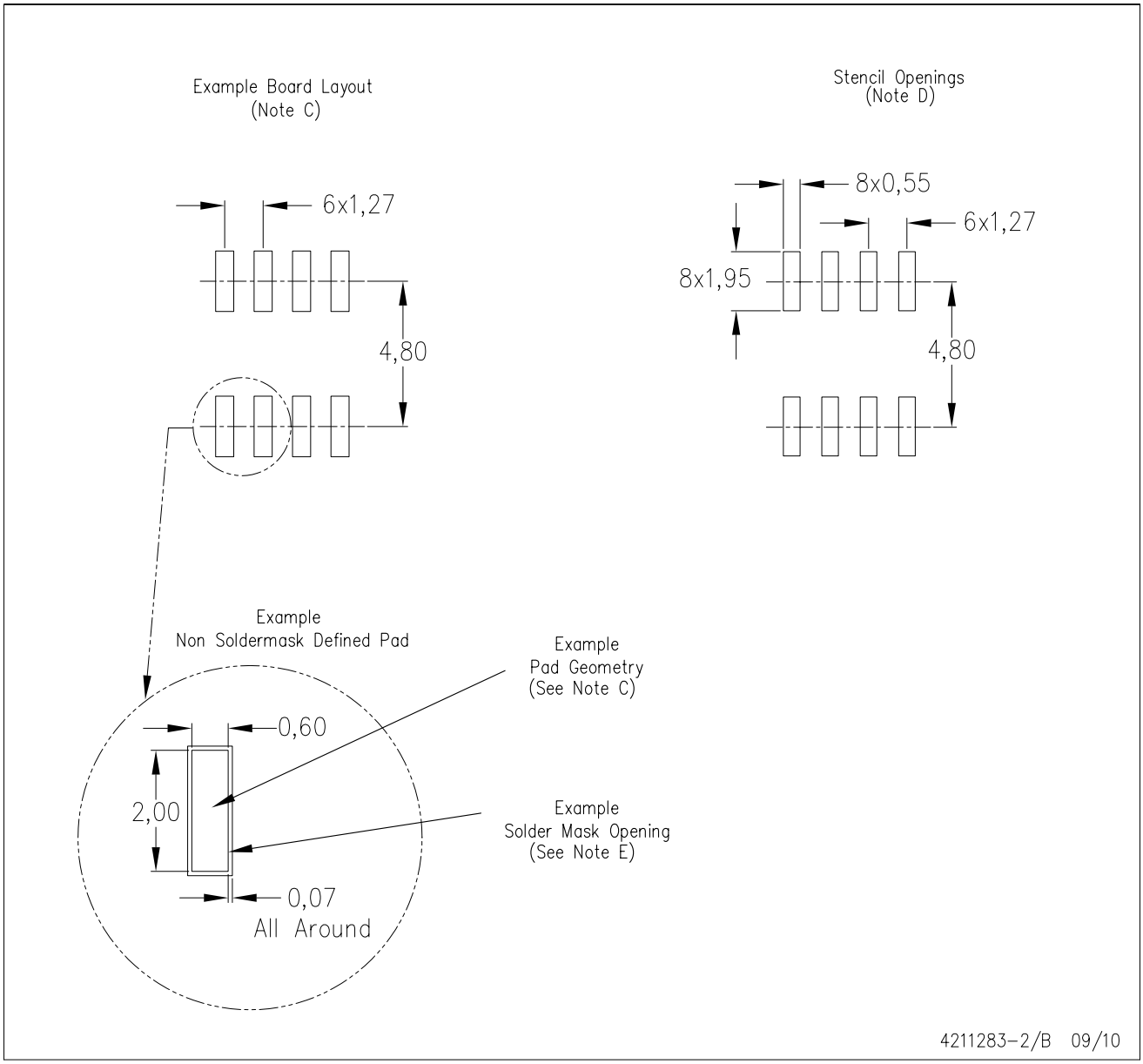

NOTES:
A. All linear dimensions are in millimeters.
B. This drawing is subject to change without notice.
C. Publication IPC–7351 is recommended for alternate designs.
D. Laser cutting apertures with trapezoidal walls and also rounding corners will offer better paste release. Customers should contact their board assembly site for stencil design recommendations. Refer to IPC–7525 for other stencil recommendations.
E. Customers should contact their board fabrication site for solder mask tolerances between and around signal pads.

查询"TPS5420-Q1"供应商

IMPORTANT NOTICE

Texas Instruments Incorporated and its subsidiaries (TI) reserve the right to make corrections, modifications, enhancements, improvements, and other changes to its products and services at any time and to discontinue any product or service without notice. Customers should obtain the latest relevant information before placing orders and should verify that such information is current and complete. All products are sold subject to TI's terms and conditions of sale supplied at the time of order acknowledgment.

TI warrants performance of its hardware products to the specifications applicable at the time of sale in accordance with TI's standard warranty. Testing and other quality control techniques are used to the extent TI deems necessary to support this warranty. Except where mandated by government requirements, testing of all parameters of each product is not necessarily performed.

TI assumes no liability for applications assistance or customer product design. Customers are responsible for their products and applications using TI components. To minimize the risks associated with customer products and applications, customers should provide adequate design and operating safeguards.

TI does not warrant or represent that any license, either express or implied, is granted under any TI patent right, copyright, mask work right, or other TI intellectual property right relating to any combination, machine, or process in which TI products or services are used. Information published by TI regarding third-party products or services does not constitute a license from TI to use such products or services or a warranty or endorsement thereof. Use of such information may require a license from a third party under the patents or other intellectual property of the third party, or a license from TI under the patents or other intellectual property of TI.

Reproduction of TI information in TI data books or data sheets is permissible only if reproduction is without alteration and is accompanied by all associated warranties, conditions, limitations, and notices. Reproduction of this information with alteration is an unfair and deceptive business practice. TI is not responsible or liable for such altered documentation. Information of third parties may be subject to additional restrictions.

Resale of TI products or services with statements different from or beyond the parameters stated by TI for that product or service voids all express and any implied warranties for the associated TI product or service and is an unfair and deceptive business practice. TI is not responsible or liable for any such statements.

TI products are not authorized for use in safety-critical applications (such as life support) where a failure of the TI product would reasonably be expected to cause severe personal injury or death, unless officers of the parties have executed an agreement specifically governing such use. Buyers represent that they have all necessary expertise in the safety and regulatory ramifications of their applications, and acknowledge and agree that they are solely responsible for all legal, regulatory and safety-related requirements concerning their products and any use of TI products in such safety-critical applications, notwithstanding any applications-related information or support that may be provided by TI. Further, Buyers must fully indemnify TI and its representatives against any damages arising out of the use of TI products in such safety-critical applications.

TI products are neither designed nor intended for use in military/aerospace applications or environments unless the TI products are specifically designated by TI as military-grade or "enhanced plastic." Only products designated by TI as military-grade meet military specifications. Buyers acknowledge and agree that any such use of TI products which TI has not designated as military-grade is solely at the Buyer's risk, and that they are solely responsible for compliance with all legal and regulatory requirements in connection with such use.

TI products are neither designed nor intended for use in automotive applications or environments unless the specific TI products are designated by TI as compliant with ISO/TS 16949 requirements. Buyers acknowledge and agree that, if they use any non-designated products in automotive applications, TI will not be responsible for any failure to meet such requirements.

Following are URLs where you can obtain information on other Texas Instruments products and application solutions:

Products		**Applications**	
Amplifiers	amplifier.ti.com	Audio	www.ti.com/audio
Data Converters	dataconverter.ti.com	Automotive	www.ti.com/automotive
DLP® Products	www.dlp.com	Communications and Telecom	www.ti.com/communications
DSP	dsp.ti.com	Computers and Peripherals	www.ti.com/computers
Clocks and Timers	www.ti.com/clocks	Consumer Electronics	www.ti.com/consumer-apps
Interface	interface.ti.com	Energy	www.ti.com/energy
Logic	logic.ti.com	Industrial	www.ti.com/industrial
Power Mgmt	power.ti.com	Medical	www.ti.com/medical
Microcontrollers	microcontroller.ti.com	Security	www.ti.com/security
RFID	www.ti-rfid.com	Space, Avionics & Defense	www.ti.com/space-avionics-defense
RF/IF and ZigBee® Solutions	www.ti.com/lprf	Video and Imaging	www.ti.com/video
		Wireless	www.ti.com/wireless-apps

Mailing Address: Texas Instruments, Post Office Box 655303, Dallas, Texas 75265
Copyright © 2010, Texas Instruments Incorporated