查询"NL17SZ32"供应商

Single 2-Input OR Gate

The NL17SZ32 is a single 2−input OR Gate in two tiny footprint packages. The device performs much as LCX multi−gate products in speed and drive. They should be used wherever the need for higher speed and drive are needed.

Features

- Tiny SOT−353 and SOT−553 Packages
- 2.4 ns T_{PD} at 5.0 V (typ)
- Source/Sink 24 mA at 3.0 V
- Over−Voltage Tolerant Inputs
- Pin For Pin with NC7SZ32P5X, TC7SZ32FU and TC7SZ32AFE
- Chip Complexity: FETs = 20
- Designed for 1.65 V to 5.5 V V_{CC} Operation
- Pb−Free Packages are Available

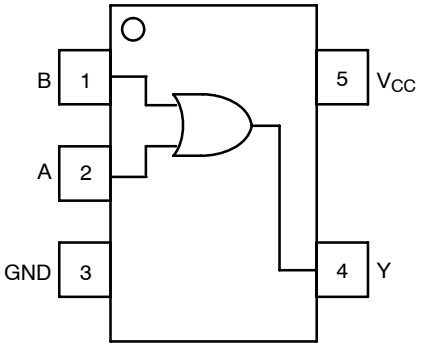

Figure 1. Pinout (Top View)

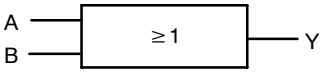

Figure 2. Logic Symbol

ON Semiconductor®

http://onsemi.com

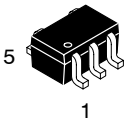

SOT−353/SC70−5/SC−88A
DF SUFFIX
CASE 419A

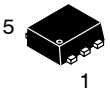

SOT−553
XV5 SUFFIX
CASE 463B

MARKING DIAGRAMS

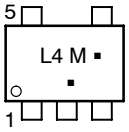

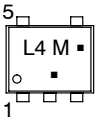

L4 = Specific Device Code
M = Date Code
▪ = Pb−Free Package
(Note: Microdot may be in either location)

PIN ASSIGNMENT

Pin	Function
1	A
2	B
3	GND
4	Y
5	V_{CC}

FUNCTION TABLE

Input		Output Y = A + B
A	B	Y
L	L	L
L	H	H
H	L	H
H	H	H

ORDERING INFORMATION

See detailed ordering and shipping information in the package dimensions section on page 4 of this data sheet.

© Semiconductor Components Industries, LLC, 2006

查询"NL17SZ32_0"供应商

MAXIMUM RATINGS

Symbol	Parameter		Value	Unit
V_{CC}	DC Supply Voltage		−0.5 to +7.0	V
V_{IN}	DC Input Voltage		−0.5 to +7.0	V
V_{OUT}	DC Output Voltage		−0.5 to V_{CC} +0.5	V
I_{IK}	DC Input Diode Current		−50	mA
I_{OK}	DC Output Diode Current		−50	mA
I_{OUT}	DC Output Sink Current		±50	mA
I_{CC}	DC Supply Current per Supply Pin		±100	mA
T_{STG}	Storage Temperature Range		−65 to +150	°C
T_L	Lead Temperature, 1 mm from Case for 10 Seconds		260	°C
T_J	Junction Temperature Under Bias		+150	°C
θ_{JA}	Thermal Resistance	SOT−353 (Note 1) SOT−553	350 496	°C/W
P_D	Power Dissipation in Still Air at 85°C	SOT−353 SOT−553	186 135	mW
MSL	Moisture Sensitivity		Level 1	
F_R	Flammability Rating	Oxygen Index: 28 to 34	UL 94 V−0 @ 0.125 in	
ESD	ESD Classification	Human Body Model (Note 2) Machine Model (Note 3) Charged Device Model (Note 4)	Class Z Class A N/A	V

Maximum ratings are those values beyond which device damage can occur. Maximum ratings applied to the device are individual stress limit values (not normal operating conditions) and are not valid simultaneously. If these limits are exceeded, device functional operation is not implied, damage may occur and reliability may be affected.

1. Measured with minimum pad spacing on an FR4 board, using 10 mm−by−1 inch, 2−ounce copper trace with no air flow.
2. Tested to EIA/JESD22−A114−A, rated to EIA/JESD22−A114−B.
3. Tested to EIA/JESD22−A115−A, rated to EIA/JESD22−A115−A.
4. Tested to JESD22−C101−A.

RECOMMENDED OPERATING CONDITIONS

Symbol	Parameter		Min	Max	Unit
V_{CC}	DC Supply Voltage		1.65	5.5	V
V_{IN}	DC Input Voltage		0	5.5	V
V_{OUT}	DC Output Voltage		0	V_{CC} + 0.5	V
T_A	Operating Temperature Range		−40	+85	°C
t_r, t_f	Input Rise and Fall Time	V_{CC} = 3.0 V ±0.3 V V_{CC} = 5.0 V ±0.5 V	0 0	100 20	ns/V

查询"NL17SZ32_0"供应商

DC ELECTRICAL CHARACTERISTICS

Symbol	Parameter	Condition	V_{CC} (V)	T_A = 25°C Min	T_A = 25°C Typ	T_A = 25°C Max	−40°C ≤ T_A ≤ 85°C Min	−40°C ≤ T_A ≤ 85°C Max	Unit
V_{IH}	High−Level Input Voltage		1.65 to 1.95 2.3 to 5.5	0.75 V_{CC} 0.7 V_{CC}			0.75 V_{CC} 0.7 V_{CC}		V
V_{IL}	Low−Level Input Voltage		1.65 to 1.95 2.3 to 5.5			0.25 V_{CC} 0.3 V_{CC}		0.25 V_{CC} 0.3 V_{CC}	V
V_{OH}	High−Level Output Voltage V_{IN} = V_{IL} or V_{IH}	I_{OH} = 100 μA	1.65 to 5.5	V_{CC} − 0.1	V_{CC}		V_{CC} − 0.1		V
		I_{OH} = −3 mA	1.65	1.29	1.52		1.29		
		I_{OH} = −8 mA	2.3	1.9	2.1		1.9		
		I_{OH} = −12 mA	2.7	2.2	2.4		2.2		
		I_{OH} = −16 mA	3.0	2.4	2.7		2.4		
		I_{OH} = −24 mA	3.0	2.3	2.5		2.3		
		I_{OH} = −32 mA	4.5	3.8	4.0		3.8		
V_{OL}	Low−Level Output Voltage V_{IN} = V_{IH} or V_{OH}	I_{OL} = 100 μA	1.65 to 5.5			0.1		0.1	V
		I_{OL} = 3 mA	1.65		0.08	0.24		0.24	
		I_{OL} = 8 mA	2.3		0.20	0.3		0.3	
		I_{OL} = 12 mA	2.7		0.22	0.4		0.4	
		I_{OL} = 16 mA	3.0		0.28	0.4		0.4	
		I_{OL} = 24 mA	3.0		0.38	0.55		0.55	
		I_{OL} = 32 mA	4.5		0.42	0.55		0.55	
I_{IN}	Input Leakage Current	V_{IN} = V_{CC} or GND	0 to 5.5			±0.1		±1.0	μA
I_{CC}	Quiescent Supply Current	V_{IN} = V_{CC} or GND	5.5			1		10	μA

AC ELECTRICAL CHARACTERISTICS t_R = t_F = 3.0 ns

Symbol	Parameter	Condition	V_{CC} (V)	T_A = 25°C Min	T_A = 25°C Typ	T_A = 25°C Max	−40°C ≤ T_A ≤ 85°C Min	−40°C ≤ T_A ≤ 85°C Max	Unit
t_{PLH} t_{PHL}	Propagation Delay (Figure 3 and 4)	R_L = 1 MΩ, C_L = 15 pF	1.65	2.0	5.5	12.0	2.0	12.7	ns
		R_L = 1 MΩ, C_L = 15 pF	1.8	2.0	4.6	10	2.0	10.5	
		R_L = 1 MΩ, C_L = 15 pF	2.5 ± 0.2	0.8	3.0	7	0.8	7.5	
		R_L = 1 MΩ, C_L = 15 pF	3.3 ± 0.3	0.5	2.6	4.7	0.5	5.0	
		R_L = 500 Ω, C_L = 50 pF		1.5	3.0	5.2	1.5	5.5	
		R_L = 1 MΩ, C_L = 15 pF	5.0 ± 0.5	0.5	2.2	4.1	0.5	4.4	
		R_L = 500 Ω, C_L = 50 pF		0.8	2.4	4.5	0.8	4.8	

CAPACITIVE CHARACTERISTICS

Symbol	Parameter	Condition	Typical	Unit
C_{IN}	Input Capacitance	V_{CC} = 5.5 V, V_I = 0 V or V_{CC}	>4	pF
C_{PD}	Power Dissipation Capacitance (Note 5)	10 MHz, V_{CC} = 3.3 V, V_I = 0 V or V_{CC}	25	pF
		10 MHz, V_{CC} = 5.5 V, V_I = 0 V or V_{CC}	30	

5. C_{PD} is defined as the value of the internal equivalent capacitance which is calculated from the operating current consumption without load. Average operating current can be obtained by the equation: $I_{CC(OPR)} = C_{PD} \bullet V_{CC} \bullet f_{in} + I_{CC}$. C_{PD} is used to determine the no−load dynamic power consumption; $P_D = C_{PD} \bullet V_{CC}^2 \bullet f_{in} + I_{CC} \bullet V_{CC}$.

查询"NL17SZ32_0"供应商

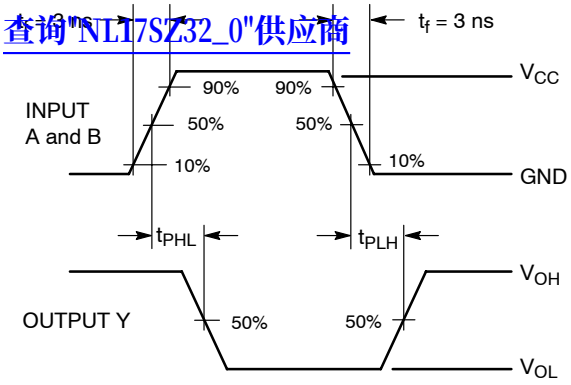

Figure 3. Switching Waveform

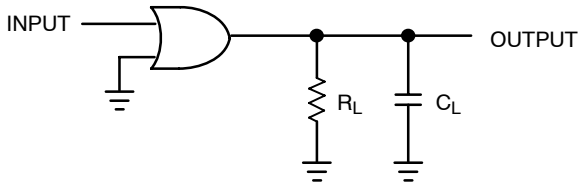

A 1 MHz square input wave is recommended for propagation delay tests.

Figure 4. Test Circuit

ORDERING INFORMATION

Device Order Number	Package Type	Tape and Reel Size†
NL17SZ32DFT2	SC70−5/SC−88A/SOT−353	3000 / Tape & Reel
NL17SZ32DFT2G	SC70−5/SC−88A/SOT−353 (Pb−Free)	3000 / Tape & Reel
NL17SZ32XV5T2	SOT−553*	4000 / Tape & Reel
NL17SZ32XV5T2G	SOT−553*	4000 / Tape & Reel

†For information on tape and reel specifications, including part orientation and tape sizes, please refer to our Tape and Reel Packaging Specifications Brochure, BRD8011/D.
*All Devices in Package SOT553 are Inherently Pb−Free.

查询"NL17SZ32_0"供应商

PACKAGE DIMENSIONS

SC−88A, SOT−353, SC−70
CASE 419A−02
ISSUE J

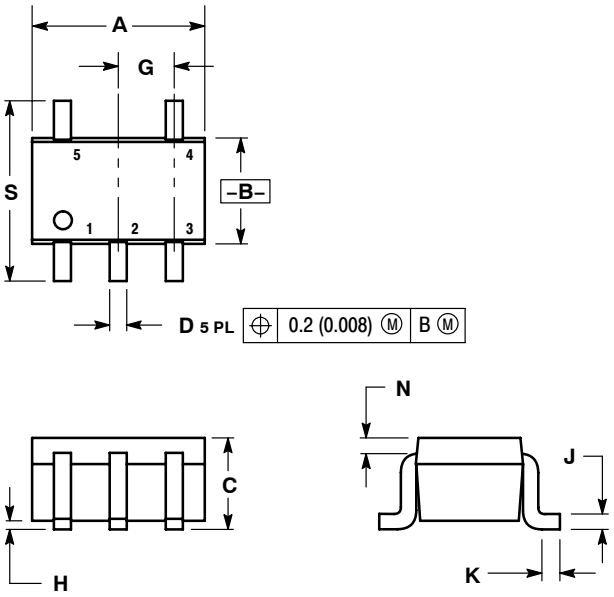

NOTES:
1. DIMENSIONING AND TOLERANCING PER ANSI Y14.5M, 1982.
2. CONTROLLING DIMENSION: INCH.
3. 419A−01 OBSOLETE. NEW STANDARD 419A−02.
4. DIMENSIONS A AND B DO NOT INCLUDE MOLD FLASH, PROTRUSIONS, OR GATE BURRS.

	INCHES		MILLIMETERS	
DIM	MIN	MAX	MIN	MAX
A	0.071	0.087	1.80	2.20
B	0.045	0.053	1.15	1.35
C	0.031	0.043	0.80	1.10
D	0.004	0.012	0.10	0.30
G	0.026 BSC		0.65 BSC	
H	---	0.004	---	0.10
J	0.004	0.010	0.10	0.25
K	0.004	0.012	0.10	0.30
N	0.008 REF		0.20 REF	
S	0.079	0.087	2.00	2.20

SOLDERING FOOTPRINT*

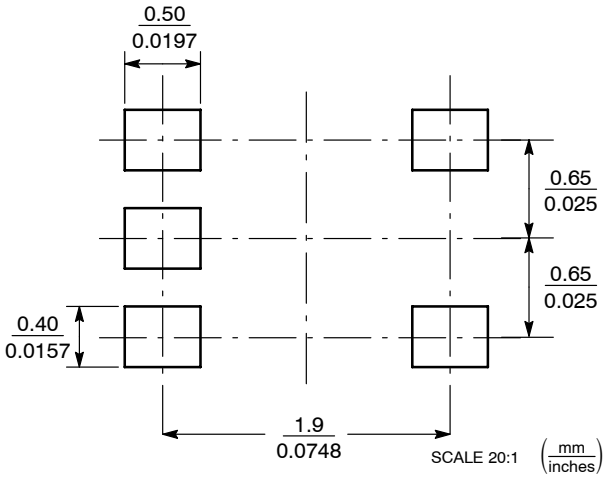

*For additional information on our Pb−Free strategy and soldering details, please download the ON Semiconductor Soldering and Mounting Techniques Reference Manual, SOLDERRM/D.

查询"NL17SZ32_0"供应商

PACKAGE DIMENSIONS

SOT−553
XV5 SUFFIX
5−LEAD PACKAGE
CASE 463B−01
ISSUE B

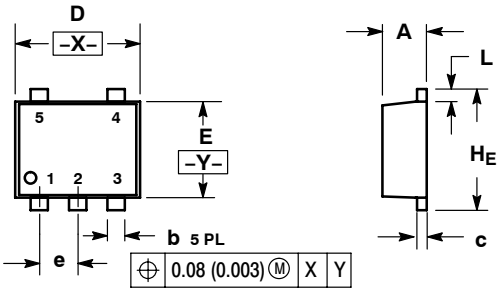

NOTES:
1. DIMENSIONING AND TOLERANCING PER ANSI Y14.5M, 1982.
2. CONTROLLING DIMENSION: MILLIMETERS
3. MAXIMUM LEAD THICKNESS INCLUDES LEAD FINISH THICKNESS. MINIMUM LEAD THICKNESS IS THE MINIMUM THICKNESS OF BASE MATERIAL.

	MILLIMETERS			INCHES		
DIM	MIN	NOM	MAX	MIN	NOM	MAX
A	0.50	0.55	0.60	0.020	0.022	0.024
b	0.17	0.22	0.27	0.007	0.009	0.011
c	0.08	0.13	0.18	0.003	0.005	0.007
D	1.50	1.60	1.70	0.059	0.063	0.067
E	1.10	1.20	1.30	0.043	0.047	0.051
e	0.50 BSC			0.020 BSC		
L	0.10	0.20	0.30	0.004	0.008	0.012
H_E	1.50	1.60	1.70	0.059	0.063	0.067

STYLE 1:
PIN 1. BASE 1
2. EMITTER 1/2
3. BASE 2
4. COLLECTOR 2
5. COLLECTOR 1

STYLE 2:
PIN 1. CATHODE
2. ANODE
3. CATHODE
4. CATHODE
5. CATHODE

SOLDERING FOOTPRINT*

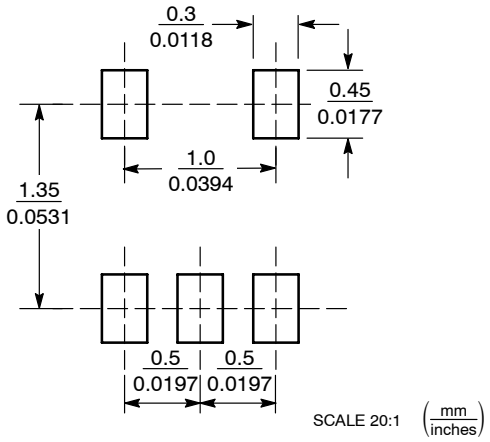

*For additional information on our Pb−Free strategy and soldering details, please download the ON Semiconductor Soldering and Mounting Techniques Reference Manual, SOLDERRM/D.

ON Semiconductor and ON are registered trademarks of Semiconductor Components Industries, LLC (SCILLC). SCILLC reserves the right to make changes without further notice to any products herein. SCILLC makes no warranty, representation or guarantee regarding the suitability of its products for any particular purpose, nor does SCILLC assume any liability arising out of the application or use of any product or circuit, and specifically disclaims any and all liability, including without limitation special, consequential or incidental damages. “Typical” parameters which may be provided in SCILLC data sheets and/or specifications can and do vary in different applications and actual performance may vary over time. All operating parameters, including “Typicals” must be validated for each customer application by customer’s technical experts. SCILLC does not convey any license under its patent rights nor the rights of others. SCILLC products are not designed, intended, or authorized for use as components in systems intended for surgical implant into the body, or other applications intended to support or sustain life, or for any other application in which the failure of the SCILLC product could create a situation where personal injury or death may occur. Should Buyer purchase or use SCILLC products for any such unintended or unauthorized application, Buyer shall indemnify and hold SCILLC and its officers, employees, subsidiaries, affiliates, and distributors harmless against all claims, costs, damages, and expenses, and reasonable attorney fees arising out of, directly or indirectly, any claim of personal injury or death associated with such unintended or unauthorized use, even if such claim alleges that SCILLC was negligent regarding the design or manufacture of the part. SCILLC is an Equal Opportunity/Affirmative Action Employer. This literature is subject to all applicable copyright laws and is not for resale in any manner.

PUBLICATION ORDERING INFORMATION

LITERATURE FULFILLMENT:
Literature Distribution Center for ON Semiconductor
P.O. Box 61312, Phoenix, Arizona 85082−1312 USA
Phone: 480−829−7710 or 800−344−3860 Toll Free USA/Canada
Fax: 480−829−7709 or 800−344−3867 Toll Free USA/Canada
Email: orderlit@onsemi.com

N. American Technical Support: 800−282−9855 Toll Free USA/Canada

Japan: ON Semiconductor, Japan Customer Focus Center
2−9−1 Kamimeguro, Meguro−ku, Tokyo, Japan 153−0051
Phone: 81−3−5773−3850

ON Semiconductor Website: http://onsemi.com

Order Literature: http://www.onsemi.com/litorder

For additional information, please contact your local Sales Representative.