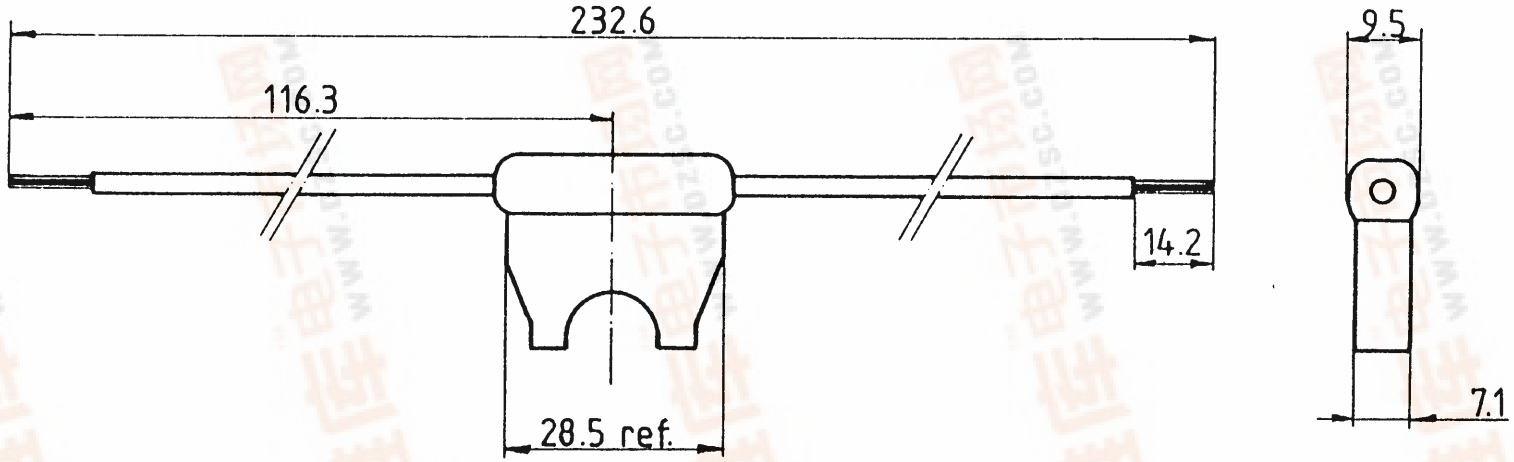

Maximum rating: 30A at a temperature of 82°C

Temperature : min. -35°C, max. 100°C

Cable : orange, # 12 AWG

ISSUE DRAWING OFFICE UTRECHT
DATE: 24 AUG. 1990

SALES

This fuseholder is a replacement for FHA2

appd		
date	29/4/88	A.H.
Revisions	released	
issue	A	

All rights strictly reserved. Reproduction or issue to third parties in any form whatsoever is not permitted without written authority from the proprietor.

copies to 1,2,5,6,7 section A

scale 1 : 1

acc. to: NEN 3311 NEN 3634 NEN 2365

Littelfuse® Tracor

Littelfuse Tracor B.V.
Kanonstraat 36
3531 BM Utrecht
The Netherlands

drawn by	checked by	approved by	date
A.H.			29-4-88

Title: In-line fuseholder

Drawing no. A 150260

sheet of

287143
查询"150260.MA000"供应商
www.dzsc.com
pdf.dzsc.com