1.8V LVCMOS Surface Mount Crystal Clock Oscillator 5211

CONNOR WINFIELD

2111 Comprehensive Drive
Aurora, Illinois 60505
Phone: 630-851-4722
Fax: 630-851-5040
www.conwin.com

US Headquarters:
630-851-4722
European Headquarters:
+353-61-472221

XO

The Connor-Winfield models 5211, 5221, and 5231 are 7.5mm x 5mm, 1.8V LVCMOS, Surface Mount, Fixed Frequency Crystal Oscillators (XO) designed for use in all applications requiring precision clocks. The RoHS compliant, surface mount package is designed for high-density mounting and is optimum for mass production.

Features:

- 30 to 70 MHz
- 1.8V Operation
- RoHS Compliant
- Tri-State Enable / Disable Function
- Overall Frequency Tolerance:
  5211 ± 25 ppm, 5221 ± 50 ppm, 5231 ± 100 ppm
- Temperature Range: -40 to 85°C
- Ceramic Surface Mount Package
- Tape and Reel Packaging

Absolute Maximum Ratings

Parameter	Minimum	Nominal	Maximum	Units	Notes
Storage Temperature	-55	-	125	°C	
Supply Voltage (Vcc)	-0.5	-	3.6	Vdc	

Operating Specifications

Parameter	Minimum	Nominal	Maximum	Units	Notes
Frequency Range (Fo)	30	-	70	MHz	
Frequency Tolerance		-		ppm	1
5211	-25		25		
5221	-50		50		
5231	-100		100		
Operating Temp Range	-40	-	85	°C	
Supply Voltage (Vdd)	1.71	1.8	1.89	Vdc	
Supply Current (Icc)	-	-	15	mA	

Input Characteristics

Parameter	Minimum	Nominal	Maximum	Units	Notes
Enable Voltage - (Vih)	≥ 70% Vdd	-	-	Vdc	2
Disable Voltage - (Vil)	-	-	≤ 30% Vdd	Vdc	
Enable Time	-	-	100	nS	
Disable Time	-	-	100	nS	

HCMOS Output Characteristics

Parameter		Minimum	Nominal	Maximum	Units	Notes
Load		-	-	15	pF	
Voltage	High (Voh)	1.54	-	-	Vdc	
	Low (Vol)	-	-	0.19		
Current	High (Ioh)	-2	-	-	mA	
	Low (Iol)	-	-	2		
Duty Cycle at 50% of Vcc		40	50	60	%	
Rise / Fall Time 10% to 90%		-	-	3.5	nS	
Start-Up Time		-	-	10	mS	
Jitter		-	-	5	pS RMS	

RoHS COMPLIANT

Bulletin	Sm073
Page	1 of 2
Revision	01
Date	01 April 2002

Notes:

1. Inclusive of calibration @ 25°C , frequency stability vs temperature, supply voltage change, load change, shock and vibration, 10 years aging.
2. Oscillator output is enabled with no connection on pad 1

CONNOR WINFIELD

2111 Comprehensive Drive
Aurora, Illinois 60505
Phone: 630-851-4722
Fax: 630-851-5040
www.conwin.com

Package Characteristics

Package	Hermetically sealed ceramic package and metal cover

Environmental Characteristics

Temperature Cycle	The specimen shall meet electrical characteristics after tested 5 cycles of -55°C / 30 minutes and +125°C / 30 minutes
Hermetical	No bubbles appear in Flourinert (FC-43) at 125°C ±5°C for 5 minutes
Solvent Resistance	Marking will withstand immersion in Isopropyl Alcohol or Trichloroethylene

Soldering

General Conditions	260°C max x 10 sec max x 2 times max or 230°C max x 180 sec max x 1 time
Typical Operation Data	(Vapor phase reflow) 20 to 100 sec up to 215°C, 50 sec at 215°C, then down to room temperature per 1 to 5°C / sec

Mechanical Characteristics

Free Drop	The specimen shall meet electrical characteristics after tested 3 times, Free Drop testing on the hard wooden board from a height of 75 cm.
Vibration	The specimen shall meet electrical characteristics after tested by the following conditions: 10-55Hz 1.5mm Amplitude, 55-2000 Hz 20 G's, 2 hours for each plane
Thermal Shock	After applied Thermal Shock of 260°C max x 10 sec max x 2 times, or 230°C max x 180 sec max, the specimen shall meet electrical characteristics
Solderability	(EIAJ-RCX-0102.101 Condition 1a) 1) Flux: MIL-F-14256 (WW Rosin=25%, Isopropyl Alcohol = 75%) 2) Solder: QQ-S-571 (Sn = 63%, Pb = 37%) 3) Solder bath temperature: 235°C ±5°C 4) Depth of immersion: Up to electrical terminal 5) Immersing time: Within 2 sec ±0.5 sec into solder bath

After performing the above procedures, a newly soldered coverage shall be greater than 90%

Suggested Pad Layout

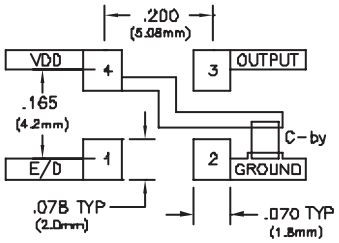

Bypass capacitor, C-by, should be ceramic capacitor ≥ .01 uf

Test Circuit

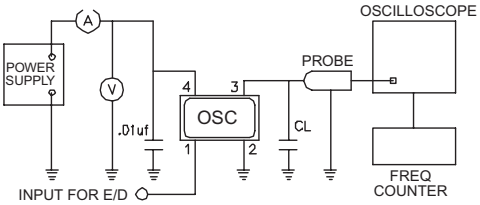

Output Waveform

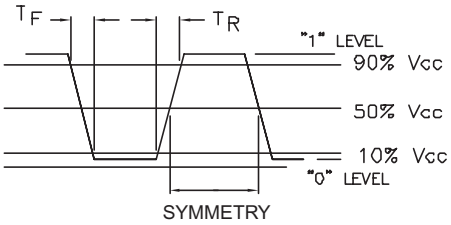

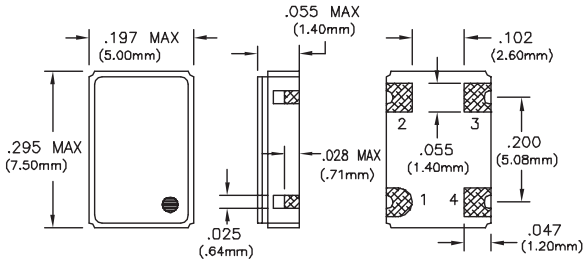

Pin Connections

1: Enable/Disable
2: Ground
3: Output
4: Vcc

Tape and Reel Dimensions

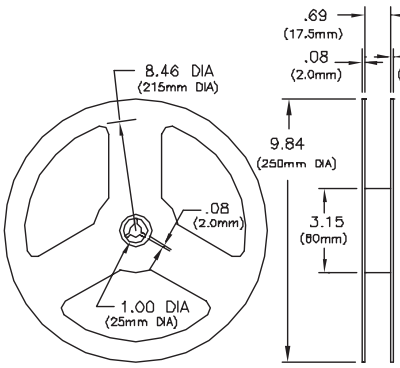

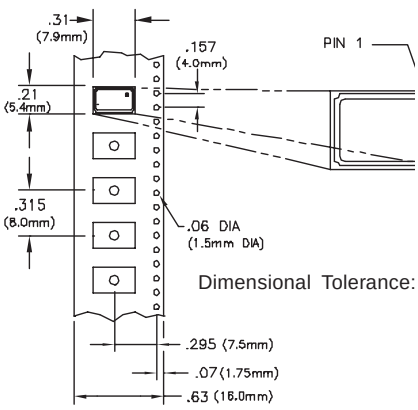

Dimensional Tolerance: ±.02" (.508mm)
±.005" (.127mm)

Meets EIA-481A and EIAJ-1009B
2,000 PCS/Reel

Ordering Information

5211 - 44.736 MHz

CLOCK SERIES — CENTER FREQUENCY

Bulletin	**Sm073**
Page	**2 of 2**
Revision	**01**
Date	**01 April 2002**