- Full-Carry Look-Ahead Across the Four Bits
- Systems Achieve Partial Look-Ahead Performance with the Economy of Ripple Carry
- Supply Voltage and Ground on Corner Pins to Simplify P-C Board Layout

TYPICAL ADD TIMES

TYPE	TWO 8-BIT WORDS	TWO 16-BIT WORDS	TYPICAL POWER DISSIPATION PER ADDER
'283	23ns	43ns	310 mW
'LS283	25ns	45ns	95 mW
'S283	15ns	30ns	510 mW

description

The '283 and 'LS283 adders are electrically and functionally identical to the '83A and 'LS83A, respectively; only the arrangement of the terminals has been changed. The 'S283 high performance versions are also functionally identical.

These improved full adders perform the addition of two 4-bit binary words. The sum (Σ) outputs are provided for each bit and the resultant carry (C4) is obtained from the fourth bit. These adders feature full internal look-ahead across all four bits generating the carry term in ten nanoseconds, typically, for the '283 and 'LS283, and 7.5 nanoseconds for the 'S283. This capability provides the system designer with partial look-ahead performance at the economy and reduced package count of a ripple-carry implementation.

The adder logic, including the carry, is implemented in its true form. End around carry can be accomplished without the need for logic or level inversion.

Series 54, Series 54LS, and Series 54S circuits are characterized for operation over the full temperature range of −55°C to 125°C. Series 74, Series 74LS, and Series 74S circuits are characterized for 0°C to 70°C operation.

SN54283, SN54LS283 . . . J OR W PACKAGE
SN54S283 . . . J PACKAGE
SN74283 . . . N PACKAGE
SN74LS283, SN74S283 . . . D OR N PACKAGE
(TOP VIEW)

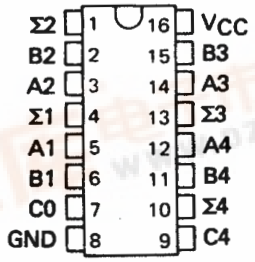

SN54LS283, SN54S283 . . . FK PACKAGE
(TOP VIEW)

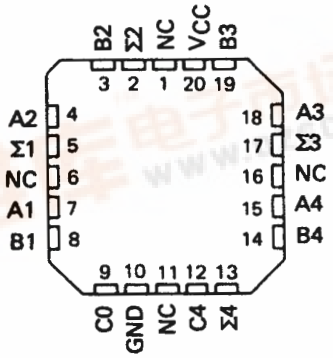

NC - No internal connection

FUNCTION TABLE

INPUT				OUTPUT WHEN C0 = L / WHEN C2 = L			OUTPUT WHEN C0 = H / WHEN C2 = H		
A1 / A3	B1 / B3	A2 / A4	B2 / B4	Σ1 / Σ3	Σ2 / Σ4	C2 / C4	Σ1 / Σ3	Σ2 / Σ4	C2 / C4
L	L	L	L	L	L	L	H	L	L
H	L	L	L	H	L	L	L	H	L
L	H	L	L	H	L	L	L	H	L
H	H	L	L	L	H	L	H	H	L
L	L	H	L	L	H	L	H	H	L
H	L	H	L	H	H	L	L	L	H
L	H	H	L	H	H	L	L	L	H
H	H	H	L	L	L	H	H	L	H
L	L	L	H	L	H	L	H	H	L
H	L	L	H	H	H	L	L	L	H
L	H	L	H	H	H	L	L	L	H
H	H	L	H	L	L	H	H	L	H
L	L	H	H	L	L	H	H	L	H
H	L	H	H	H	L	H	L	H	H
L	H	H	H	H	L	H	L	H	H
H	H	H	H	L	H	H	H	H	H

H = high level, L = low level

NOTE: Input conditions at A1, B1, A2, B2, and C0 are used to determine outputs Σ1 and Σ2 and the value of the internal carry C2. The values at C2, A3, B3, A4, and B4 are then used to determine outputs Σ3, Σ4, and C4.

logic symbol†

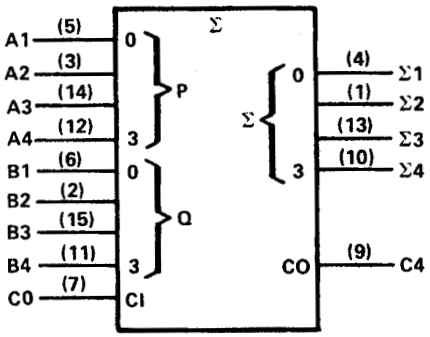

†This symbol is in accordance with ANSI/IEEE Std. 91-1984 and IEC Publication 617-12.
Pin numbers shown are for D, J, N, and W packages.

logic diagram (positive logic)

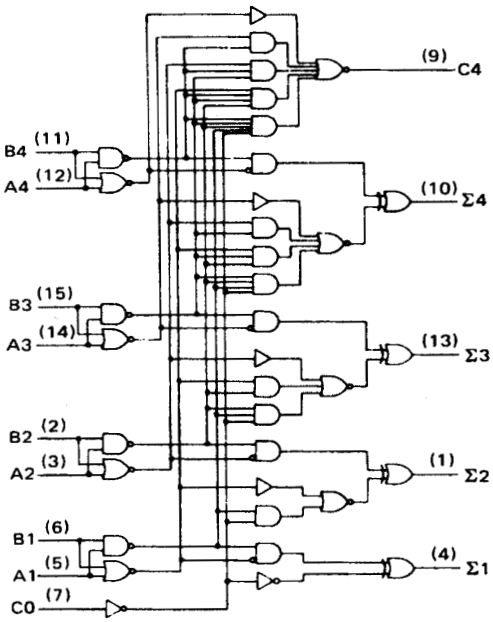

Pin numbers shown are for D, J, N, and W packages.

schematics of inputs and outputs

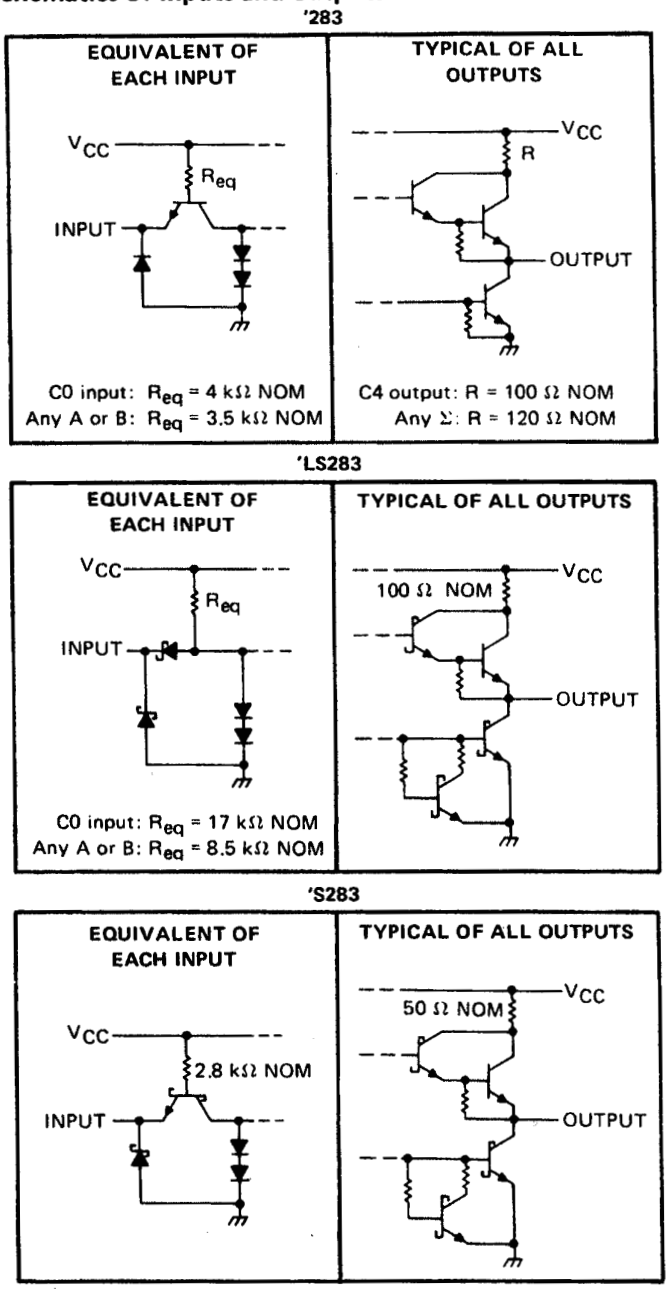

absolute maximum ratings over operating free-air temperature range (unless otherwise noted)

Supply voltage, V_{CC} (see Note 1)		7V
Input voltage: '283, 'S283		5.5V
'LS283		7V
Interemitter voltage (see Note 2)		5.5V
Operating free-air temperature range:	SN54283, SN54LS283, SN54S283	–55°C to 125°C
	SN74283, SN74LS283, SN74S283	0°C to 70°C
Storage temperature range		–65°C to 150°C

NOTES: 1. Voltage values, except interemitter voltage, are with respect to network ground terminal.
2. This is the voltage between two emitters of a multiple-emitter transistor. This rating applies for the '283 and 'S283 only between the following pairs: A1 and B1, A2 and B2, A3 and B3, A4 and B4.

recommended operating conditions

		SN54283			SN74283			UNIT
		MIN	NOM	MAX	MIN	NOM	MAX	
Supply Voltage, V_{CC}		4.5	5	5.5	4.75	5	5.25	V
High-level output current, I_{OH}	Any output except C4			–800			–800	μA
	Output C4			–400			–400	
Low-level output current, I_{OL}	Any output except C4			16			16	mA
	Output C4			8			8	
Operating free-air temperature, T_A		–55		125	0		70	°C

electrical characteristics over recommended operating free-air temperature range (unless otherwise noted)

PARAMETER		TEST CONDITIONS†		SN54283			SN74283			UNIT
				MIN	TYP‡	MAX	MIN	TYP‡	MAX	
V_{IH} High-level input voltage				2			2			V
V_{IL} Low-level input voltage						0.8			0.8	V
V_{IK} Input clamp voltage		V_{CC} = MIN, I_I = –12 mA				–1.5			–1.5	V
V_{OH} High-level output voltage		V_{CC} = MIN, V_{IH} = 2 V, V_{IL} = 0.8 V, I_{OH} = MAX		2.4	3.6		2.4	3.6		V
V_{OL} Low-level output voltage		V_{CC} = MIN, V_{IH} = 2 V, V_{IL} = 0.8 V, I_{OL} = MAX			0.2	0.4		0.2	0.4	V
I_I Input current at maximum input voltage		V_{CC} = MAX, V_I = 5.5 V				1			1	mA
I_{IH} High-level input current		V_{CC} = MAX, V_I = 2.4 V				40			40	μA
I_{IL} Low-level input current		V_{CC} = MAX, V_I = 0.4 V				–1.6			–1.6	mA
I_{OS} Short-circuit output current§	Any output except C4	V_{CC} = MAX		–20		–55	–18		–55	mA
	Output C4			–20		–70	–18		–70	
I_{CC} Supply current		V_{CC} = MAX, Outputs open	All B low, other inputs at 4.5 V		56			56		mA
			All inputs at 4.5 V		66	99		66	110	

†For conditions shown as MIN or MAX, use the appropriate value specified under recommended operating conditions.
‡All typical values are at V_{CC} = 5 V, T_A = 25°C.
§Only one output should be shorted at a time.

switching characteristics, V_{CC} = 5 V, T_A = 25°C

PARAMETER¶	FROM (INPUT)	TO (OUTPUT)	TEST CONDITIONS	MIN	TYP	MAX	UNIT
t_{PLH}	C0	Any Σ	C_L = 15 pF, R_L = 400 Ω, See Note 3		14	21	ns
t_{PHL}					12	21	
t_{PLH}	A_i or B_i	$Σ_i$			16	24	ns
t_{PHL}					16	24	
t_{PLH}	C0	C4	C_L = 15 pF, R_L = 780 Ω, See Note 3		9	14	ns
t_{PHL}					11	16	
t_{PLH}	A_i or B_i	C4			9	14	ns
t_{PHL}					11	16	

¶t_{PLH} = propagation delay time, low-to-high-level output
t_{PHL} = propagation delay time, high-to-low-level output
NOTE 3: Load circuits and voltage waveforms are shown in Section 1.

recommended operating conditions

	SN54LS283			SN74LS283			UNIT
	MIN	NOM	MAX	MIN	NOM	MAX	
Supply voltage, V_{CC}	4.5	5	5.5	4.75	5	5.25	V
High-level output current, I_{OH}			−400			−400	μA
Low-level output current, I_{OL}			4			8	mA
Operating free-air temperature, T_A	−55		125	0		70	°C

electrical characteristics over recommended operating free-air temperature range (unless otherwise noted)

PARAMETER			TEST CONDITIONS†		SN54LS283 MIN	SN54LS283 TYP‡	SN54LS283 MAX	SN74LS283 MIN	SN74LS283 TYP‡	SN74LS283 MAX	UNIT
V_{IH}	High-level input voltage				2			2			V
V_{IL}	Low-level input voltage						0.7			0.8	V
V_{IK}	Input clamp voltage		V_{CC} = MIN, I_I = −18 mA				−1.5			−1.5	V
V_{OH}	High-level output voltage		V_{CC} = MIN, V_{IH} = 2 V, V_{IL} = V_{IL} max, I_{OH} = −400 μA		2.5	3.4		2.7	3.4		V
V_{OL}	Low-level output voltage		V_{CC} = MIN, V_{IH} = 2 V, V_{IL} = V_{IL} max	I_{OL} = 4 mA		0.25	0.4		0.25	0.4	V
				I_{OL} = 8 mA					0.35	0.5	
I_I	Input current at maximum input voltage	Any A or B	V_{CC} = MAX, V_I = 7 V				0.2			0.2	mA
		C0					0.1			0.1	
I_{IH}	High-level input current	Any A or B	V_{CC} = MAX, V_I = 2.7 V				40			40	μA
		C0					20			20	
I_{IL}	Low-level input current	Any A or B	V_{CC} = MAX, V_I = 0.4 V				−0.8			−0.8	mA
		C0					−0.4			−0.4	
I_{OS}	Short-circuit output current§		V_{CC} = MAX		−20		−100	−20		−100	mA
I_{CC}	Supply current		V_{CC} = MAX, Outputs open	All inputs grounded		22	39		22	39	mA
				All B low, other inputs at 4.5 V		19	34		19	34	
				All inputs at 4.5 V		19	34		19	34	

†For conditions shown as MIN or MAX, use the appropriate value specified under recommended operating conditions.
‡All typical values are at V_{CC} = 5 V, T_A = 25°C.
§Only one output should be shorted at a time and duration of the short-circuit should not exceed one second.

switching characteristics, V_{CC} = 5 V, T_A = 25°C

PARAMETER¶	FROM (INPUT)	TO (OUTPUT)	TEST CONDITIONS	MIN	TYP	MAX	UNIT
t_{PLH}	C0	Any Σ	C_L = 15 pF, R_L = 2 kΩ, See Note 3		16	24	ns
t_{PHL}					15	24	
t_{PLH}	A_i or B_i	$Σ_i$			15	24	ns
t_{PHL}					15	24	
t_{PLH}	C0	C4			11	17	ns
t_{PHL}					11	22	
t_{PLH}	A_i or B_i	C4			11	17	ns
t_{PHL}					12	17	

¶t_{PLH} = propagation delay time, low-to-high-level output
t_{PHL} = propagation delay time, high-to-low-level output
NOTE 3: Load circuits and voltage waveforms are shown in Section 1.

recommended operating conditions

		SN54S283			SN74S283			UNIT
		MIN	NOM	MAX	MIN	NOM	MAX	
Supply voltage, V_{CC}		4.5	5	5.5	4.75	5	5.25	V
High-level output current, I_{OH}	Any output except C4			−1			−1	mA
	Output C4			−500			−500	μA
Low-level output current, I_{OL}	Any output except C4			20			20	mA
	Output C4			10			10	
Operating free-air temperature, T_A		−55		125	0		70	°C

electrical characteristics over recommended operating free-air temperature range (unless otherwise noted)

PARAMETER			TEST CONDITIONS†		MIN	TYP‡	MAX	UNIT
V_{IH}	High-level input voltage				2			V
V_{IL}	Low-level input voltage						0.8	V
V_{IK}	Input clamp voltage		V_{CC} = MIN,	I_I = −18 mA			−1.2	V
V_{OH}	High-level output voltage	SN54S283	V_{CC} = MIN,	V_{IH} = 2 V,	2.5	3.4		V
		SN74S283	V_{IL} = 0.8 V,	I_{OH} = MAX	2.7	3.4		
V_{OL}	Low-level output voltage		V_{CC} = MIN, V_{IL} = 0.8 V,	V_{IH} = 2 V, I_{OL} = MAX			0.5	V
I_I	Input current at maximum input voltage		V_{CC} = MAX,	V_I = 5.5 V			1	mA
I_{IH}	High-level input current		V_{CC} = MAX,	V_I = 2.7 V			50	μA
I_{IL}	Low-level input current		V_{CC} = MAX,	V_I = 0.5 V			−2	mA
I_{OS}	Short-circuit output current§	Any output except C4	V_{CC} = MAX		−40		−100	mA
		Output C4			−20		−100	
I_{CC}	Supply current		V_{CC} = MAX, Outputs open	All B low, other inputs at 4.5 V		80		mA
				All inputs at 4.5 V		95	160	

†For conditions shown as MIN or MAX, use the appropriate value specified under recommended operating conditions for the applicable device type.

‡All typical values are at V_{CC} = 5 V, T_A = 25°C.

§Only one output should be shorted at a time, and duration of the short-circuit should not exceed one second.

switching characteristics, V_{CC} = 5 V, T_A = 25°C

PARAMETER¶	FROM (INPUT)	TO (OUTPUT)	TEST CONDITIONS	MIN	TYP	MAX	UNIT
t_{PLH}	C0	Any Σ	C_L = 15 pF, R_L = 280 Ω, See Note 3		11	18	ns
t_{PHL}					12	18	
t_{PLH}	A_i or B_i	$Σ_i$			12	18	ns
t_{PHL}					11.5	18	
t_{PLH}	C0	C4	C_L = 15 pF, R_L = 560 Ω, See Note 3		6	11	ns
t_{PHL}					7.5	11	
t_{PLH}	A_i or B_i	C4			7.5	12	ns
t_{PHL}					8.5	12	

¶t_{PLH} = propagation delay time, low-to-high-level output
t_{PHL} = propagation delay time, high-to-low-level output
NOTE 3: Load circuits and voltage waveforms are shown in Section 1.

PACKAGING INFORMATION

Orderable Device	Status [1]	Package Type	Package Drawing	Pins	Package Qty	Eco Plan [2]	Lead/Ball Finish	MSL Peak Temp [3]
5962-7604301VEA	ACTIVE	CDIP	J	16	1	TBD	A42	N / A for Pkg Type
76043012A	ACTIVE	LCCC	FK	20	1	TBD	POST-PLATE	N / A for Pkg Type
7604301EA	ACTIVE	CDIP	J	16	1	TBD	A42	N / A for Pkg Type
7604301FA	ACTIVE	CFP	W	16	1	TBD	A42	N / A for Pkg Type
JM38510/31202B2A	ACTIVE	LCCC	FK	20	1	TBD	POST-PLATE	N / A for Pkg Type
JM38510/31202BEA	ACTIVE	CDIP	J	16	1	TBD	A42	N / A for Pkg Type
JM38510/31202BFA	ACTIVE	CFP	W	16	1	TBD	A42	N / A for Pkg Type
SN54LS283J	ACTIVE	CDIP	J	16	1	TBD	A42	N / A for Pkg Type
SN54S283J	ACTIVE	CDIP	J	16	1	TBD	A42	N / A for Pkg Type
SN74283N	OBSOLETE	PDIP	N	16		TBD	Call TI	Call TI
SN74LS283D	ACTIVE	SOIC	D	16	40	Green (RoHS & no Sb/Br)	CU NIPDAU	Level-1-260C-UNLIM
SN74LS283DE4	ACTIVE	SOIC	D	16	40	Green (RoHS & no Sb/Br)	CU NIPDAU	Level-1-260C-UNLIM
SN74LS283DG4	ACTIVE	SOIC	D	16	40	Green (RoHS & no Sb/Br)	CU NIPDAU	Level-1-260C-UNLIM
SN74LS283N	ACTIVE	PDIP	N	16	25	Pb-Free (RoHS)	CU NIPDAU	N / A for Pkg Type
SN74LS283N3	OBSOLETE	PDIP	N	16		TBD	Call TI	Call TI
SN74LS283NE4	ACTIVE	PDIP	N	16	25	Pb-Free (RoHS)	CU NIPDAU	N / A for Pkg Type
SN74LS283NSR	ACTIVE	SO	NS	16	2000	Green (RoHS & no Sb/Br)	CU NIPDAU	Level-1-260C-UNLIM
SN74LS283NSRE4	ACTIVE	SO	NS	16	2000	Green (RoHS & no Sb/Br)	CU NIPDAU	Level-1-260C-UNLIM
SN74LS283NSRG4	ACTIVE	SO	NS	16	2000	Green (RoHS & no Sb/Br)	CU NIPDAU	Level-1-260C-UNLIM
SN74S283D	OBSOLETE	SOIC	D	16		TBD	Call TI	Call TI
SN74S283N	ACTIVE	PDIP	N	16	25	Pb-Free (RoHS)	CU NIPDAU	N / A for Pkg Type
SN74S283N3	OBSOLETE	PDIP	N	16		TBD	Call TI	Call TI
SN74S283NE4	ACTIVE	PDIP	N	16	25	Pb-Free (RoHS)	CU NIPDAU	N / A for Pkg Type
SNJ54LS283FK	ACTIVE	LCCC	FK	20	1	TBD	POST-PLATE	N / A for Pkg Type
SNJ54LS283J	ACTIVE	CDIP	J	16	1	TBD	A42	N / A for Pkg Type
SNJ54LS283W	ACTIVE	CFP	W	16	1	TBD	A42	N / A for Pkg Type
SNJ54S283FK	ACTIVE	LCCC	FK	20	1	TBD	POST-PLATE	N / A for Pkg Type
SNJ54S283J	ACTIVE	CDIP	J	16	1	TBD	A42	N / A for Pkg Type
SNJ54S283W	ACTIVE	CFP	W	16	1	TBD	A42	N / A for Pkg Type

[1] The marketing status values are defined as follows:
ACTIVE: Product device recommended for new designs.
LIFEBUY: TI has announced that the device will be discontinued, and a lifetime-buy period is in effect.
NRND: Not recommended for new designs. Device is in production to support existing customers, but TI does not recommend using this part in a new design.
PREVIEW: Device has been announced but is not in production. Samples may or may not be available.
OBSOLETE: TI has discontinued the production of the device.

(2) Eco Plan - The planned eco-friendly classification: Pb-Free (RoHS), Pb-Free (RoHS Exempt), or Green (RoHS & no Sb/Br) - please check http://www.ti.com/productcontent for the latest availability information and additional product content details.
TBD: The Pb-Free/Green conversion plan has not been defined.
Pb-Free (RoHS): TI's terms "Lead-Free" or "Pb-Free" mean semiconductor products that are compatible with the current RoHS requirements for all 6 substances, including the requirement that lead not exceed 0.1% by weight in homogeneous materials. Where designed to be soldered at high temperatures, TI Pb-Free products are suitable for use in specified lead-free processes.
Pb-Free (RoHS Exempt): This component has a RoHS exemption for either 1) lead-based flip-chip solder bumps used between the die and package, or 2) lead-based die adhesive used between the die and leadframe. The component is otherwise considered Pb-Free (RoHS compatible) as defined above.
Green (RoHS & no Sb/Br): TI defines "Green" to mean Pb-Free (RoHS compatible), and free of Bromine (Br) and Antimony (Sb) based flame retardants (Br or Sb do not exceed 0.1% by weight in homogeneous material)

(3) MSL, Peak Temp. -- The Moisture Sensitivity Level rating according to the JEDEC industry standard classifications, and peak solder temperature.

Important Information and Disclaimer: The information provided on this page represents TI's knowledge and belief as of the date that it is provided. TI bases its knowledge and belief on information provided by third parties, and makes no representation or warranty as to the accuracy of such information. Efforts are underway to better integrate information from third parties. TI has taken and continues to take reasonable steps to provide representative and accurate information but may not have conducted destructive testing or chemical analysis on incoming materials and chemicals. TI and TI suppliers consider certain information to be proprietary, and thus CAS numbers and other limited information may not be available for release.

In no event shall TI's liability arising out of such information exceed the total purchase price of the TI part(s) at issue in this document sold by TI to Customer on an annual basis.

TAPE AND REEL INFORMATION

REEL DIMENSIONS

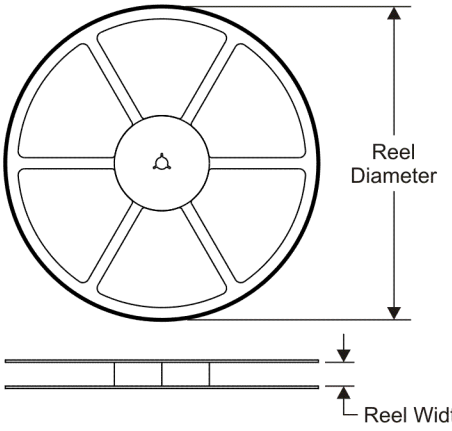

TAPE DIMENSIONS

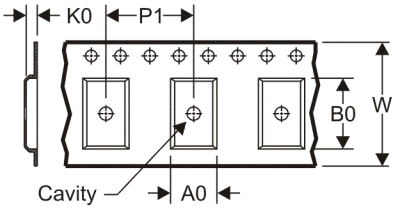

A0	Dimension designed to accommodate the component width
B0	Dimension designed to accommodate the component length
K0	Dimension designed to accommodate the component thickness
W	Overall width of the carrier tape
P1	Pitch between successive cavity centers

QUADRANT ASSIGNMENTS FOR PIN 1 ORIENTATION IN TAPE

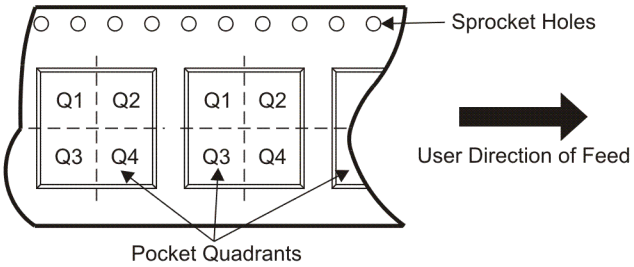

*All dimensions are nominal

Device	Package Type	Package Drawing	Pins	SPQ	Reel Diameter (mm)	Reel Width W1 (mm)	A0 (mm)	B0 (mm)	K0 (mm)	P1 (mm)	W (mm)	Pin1 Quadrant
SN74LS283NSR	SO	NS	16	2000	330.0	16.4	8.2	10.5	2.5	12.0	16.0	Q1

TAPE AND REEL BOX DIMENSIONS

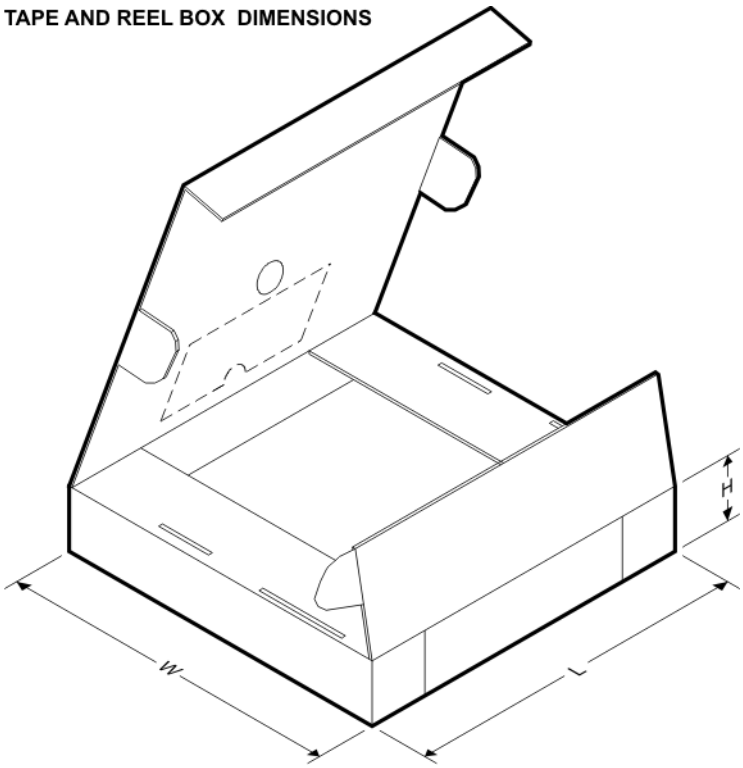

*All dimensions are nominal

Device	Package Type	Package Drawing	Pins	SPQ	Length (mm)	Width (mm)	Height (mm)
SN74LS283NSR	SO	NS	16	2000	346.0	346.0	33.0

IMPORTANT NOTICE

Texas Instruments Incorporated and its subsidiaries (TI) reserve the right to make corrections, modifications, enhancements, improvements, and other changes to its products and services at any time and to discontinue any product or service without notice. Customers should obtain the latest relevant information before placing orders and should verify that such information is current and complete. All products are sold subject to TI's terms and conditions of sale supplied at the time of order acknowledgment.

TI warrants performance of its hardware products to the specifications applicable at the time of sale in accordance with TI's standard warranty. Testing and other quality control techniques are used to the extent TI deems necessary to support this warranty. Except where mandated by government requirements, testing of all parameters of each product is not necessarily performed.

TI assumes no liability for applications assistance or customer product design. Customers are responsible for their products and applications using TI components. To minimize the risks associated with customer products and applications, customers should provide adequate design and operating safeguards.

TI does not warrant or represent that any license, either express or implied, is granted under any TI patent right, copyright, mask work right, or other TI intellectual property right relating to any combination, machine, or process in which TI products or services are used. Information published by TI regarding third-party products or services does not constitute a license from TI to use such products or services or a warranty or endorsement thereof. Use of such information may require a license from a third party under the patents or other intellectual property of the third party, or a license from TI under the patents or other intellectual property of TI.

Reproduction of TI information in TI data books or data sheets is permissible only if reproduction is without alteration and is accompanied by all associated warranties, conditions, limitations, and notices. Reproduction of this information with alteration is an unfair and deceptive business practice. TI is not responsible or liable for such altered documentation. Information of third parties may be subject to additional restrictions.

Resale of TI products or services with statements different from or beyond the parameters stated by TI for that product or service voids all express and any implied warranties for the associated TI product or service and is an unfair and deceptive business practice. TI is not responsible or liable for any such statements.

TI products are not authorized for use in safety-critical applications (such as life support) where a failure of the TI product would reasonably be expected to cause severe personal injury or death, unless officers of the parties have executed an agreement specifically governing such use. Buyers represent that they have all necessary expertise in the safety and regulatory ramifications of their applications, and acknowledge and agree that they are solely responsible for all legal, regulatory and safety-related requirements concerning their products and any use of TI products in such safety-critical applications, notwithstanding any applications-related information or support that may be provided by TI. Further, Buyers must fully indemnify TI and its representatives against any damages arising out of the use of TI products in such safety-critical applications.

TI products are neither designed nor intended for use in military/aerospace applications or environments unless the TI products are specifically designated by TI as military-grade or "enhanced plastic." Only products designated by TI as military-grade meet military specifications. Buyers acknowledge and agree that any such use of TI products which TI has not designated as military-grade is solely at the Buyer's risk, and that they are solely responsible for compliance with all legal and regulatory requirements in connection with such use.

TI products are neither designed nor intended for use in automotive applications or environments unless the specific TI products are designated by TI as compliant with ISO/TS 16949 requirements. Buyers acknowledge and agree that, if they use any non-designated products in automotive applications, TI will not be responsible for any failure to meet such requirements.

Following are URLs where you can obtain information on other Texas Instruments products and application solutions:

Products		**Applications**	
Amplifiers	amplifier.ti.com	Audio	www.ti.com/audio
Data Converters	dataconverter.ti.com	Automotive	www.ti.com/automotive
DLP® Products	www.dlp.com	Broadband	www.ti.com/broadband
DSP	dsp.ti.com	Digital Control	www.ti.com/digitalcontrol
Clocks and Timers	www.ti.com/clocks	Medical	www.ti.com/medical
Interface	interface.ti.com	Military	www.ti.com/military
Logic	logic.ti.com	Optical Networking	www.ti.com/opticalnetwork
Power Mgmt	power.ti.com	Security	www.ti.com/security
Microcontrollers	microcontroller.ti.com	Telephony	www.ti.com/telephony
RFID	www.ti-rfid.com	Video & Imaging	www.ti.com/video
RF/IF and ZigBee® Solutions	www.ti.com/lprf	Wireless	www.ti.com/wireless

Mailing Address: Texas Instruments, Post Office Box 655303, Dallas, Texas 75265