查询"L320ML11NL"供应商

Am29LV320MH/L

Data Sheet

SPANSION™

RETIRED PRODUCT

This product has been retired and is not available for designs. For new and current designs, S29GL032A supersedes Am29LV320MH/L and is the factory-recommended migration path. Please refer to the S29GL032A datasheet for specifications and ordering information. Availability of this document is retained for reference and historical purposes only.

The following document contains information on Spansion memory products. Although the document is marked with the name of the company that originally developed the specification, Spansion will continue to offer these products to existing customers.

Continuity of Specifications

There is no change to this data sheet as a result of offering the device as a Spansion product. Any changes that have been made are the result of normal data sheet improvement and are noted in the document revision summary, where supported. Future routine revisions will occur when appro and changes will be noted in a revision summary.

Continuity of Ordering Part Numbers

Spansion continues to support existing part numbers beginning with “Am” and “MBM”. To order these products, please use only the Ordering Part Numbers listed in this document.

For More Information

Please contact your local sales office for additional information about Spansion memory solutions.

Publication Number **26517** Revision **B** Amendment **4** Issue Date **January 31, 2007**

AMD

FUJITSU

查询"L320ML11NI"供应商

THIS PAGE LEFT INTENTIONALLY BLANK.

DATA SHEET

查询"L320MLHNI"供应商

Am29LV320MH/L

32 Megabit (2 M x 16-Bit/4 M x 8-Bit) MirrorBit™ 3.0 Volt-only Uniform Sector Flash Memory with VersatileI/O™ Control

This product has been retired and is not available for designs. For new and current designs, S29GL032A supersedes Am29LV320M H/L and is the factory-recommended migration path. Please refer to the S29GL032A datasheet for specifications and ordering information. Availability of this document is retained for reference and historical purposes only.

DISTINCTIVE CHARACTERISTICS

ARCHITECTURAL ADVANTAGES

- **Single power supply operation**
  - 3 V for read, erase, and program operations
- **VersatileI/O™ control**
  - Device generates data output voltages and tolerates data input voltages on the DQ inputs/outputs as determined by the voltage on the V_{IO} pin; operates from 1.65 to 3.6 V
- **Manufactured on 0.23 µm MirrorBit process technology**
- **Secured Silicon Sector region**
  - 128-word/256-byte sector for permanent, secure identification through an 8-word/16-byte random Electronic Serial Number, accessible through a command sequence
  - May be programmed and locked at the factory or by the customer
- **Flexible sector architecture**
  - Sixty-four 32 Kword/64-Kbyte sectors
- **Compatibility with JEDEC standards**
  - Provides pinout and software compatibility for single-power supply flash, and superior inadvertent write protection
- **Minimum 100,000 erase cycle guarantee per sector**
- **20-year data retention at 125°C**

PERFORMANCE CHARACTERISTICS

- **High performance**
  - 90 ns access time
  - 25 ns page read times
  - 0.5 s typical sector erase time
  - 15 µs typical effective write buffer word programming time: 16-word/32-byte write buffer reduces overall programming time for multiple-word/byte updates
  - 4-word/8-byte page read buffer
  - 16-word/32-byte write buffer
- **Low power consumption (typical values at 3.0 V, 5 MHz)**
  - 13 mA typical active read current
  - 50 mA typical erase/program current
  - 1 µA typical standby mode current
- **Package options**
  - 56-pin TSOP
  - 64-ball Fortified BGA

SOFTWARE & HARDWARE FEATURES

- **Software features**
  - Program Suspend & Resume: read other sectors before programming operation is completed
  - Erase Suspend & Resume: read/program other sectors before an erase operation is completed
  - Data# polling & toggle bits provide status
  - Unlock Bypass Program command reduces overall multiple-word programming time
  - CFI (Common Flash Interface) compliant: allows host system to identify and accommodate multiple flash devices
- **Hardware features**
  - Sector Group Protection: hardware-level method of preventing write operations within a sector group
  - Temporary Sector Unprotect: V_{ID}-level method of changing code in locked sectors
  - WP#/ACC input:
    Write Protect input (WP#) protects first or last sector regardless of sector protection settings
    ACC (high voltage) accelerates programming time for higher throughput during system production
  - Hardware reset input (RESET#) resets device
  - Ready/Busy# output (RY/BY#) indicates program or erase cycle completion

Publication# **26517** Rev: **B** Amendment/**4**
Issue Date: **January 31, 2007**

GENERAL DESCRIPTION

查询"L320ML11NJ"供应商

The Am29LV320MH/L is a 32 Mbit, 3.0 volt single power supply flash memory device organized as 2,097,152 words or 4,194,304 bytes. The device has an 8-bit/16-bit bus and can be programmed either in the host system or in standard EPROM programmers.

An access time of 90, 100, 110, or 120 ns is available. Note that each access time has a specific operating voltage range (V_{CC}) and an I/O voltage range (V_{IO}), as specified in the Product Selector Guide and the Ordering Information sections. The device is offered in a 56-pin TSOP or 64-ball Fortified BGA package. Each device has separate chip enable (CE#), write enable (WE#) and output enable (OE#) controls.

Each device requires only a **single 3.0 volt power supply** for both read and write functions. In addition to a V_{CC} input, a high-voltage **accelerated program (ACC)** feature provides shorter programming times through increased current on the WP#/ACC input. This feature is intended to facilitate factory throughput during system production, but may also be used in the field if desired.

The device is entirely command set compatible with the **JEDEC single-power-supply Flash standard**. Commands are written to the device using standard microprocessor write timing. Write cycles also internally latch addresses and data needed for the programming and erase operations.

The **sector erase architecture** allows memory sectors to be erased and reprogrammed without affecting the data contents of other sectors. The device is fully erased when shipped from the factory.

Device programming and erasure are initiated through command sequences. Once a program or erase operation has begun, the host system need only poll the DQ7 (Data# Polling) or DQ6 (toggle) **status bits** or monitor the **Ready/Busy# (RY/BY#)** output to determine whether the operation is complete. To facilitate programming, an **Unlock Bypass** mode reduces command sequence overhead by requiring only two write cycles to program data instead of four.

The **VersatileI/O™** (V_{IO}) control allows the host system to set the voltage levels that the device generates and tolerates on the CE# control input and DQ I/Os to the same voltage level that is asserted on the V_{IO} pin. Refer to the Ordering Information section for valid V_{IO} options.

Hardware data protection measures include a low V_{CC} detector that automatically inhibits write operations during power transitions. The hardware sector protection feature disables both program and erase operations in any combination of sectors of memory. This can be achieved in-system or via programming equipment.

The **Erase Suspend/Erase Resume** feature allows the host system to pause an erase operation in a given sector to read or program any other sector and then complete the erase operation. The **Program Suspend/Program Resume** feature enables the host system to pause a program operation in a given sector to read any other sector and then complete the program operation.

The **hardware RESET# pin** terminates any operation in progress and resets the device, after which it is then ready for a new operation. The RESET# pin may be tied to the system reset circuitry. A system reset would thus also reset the device, enabling the host system to read boot-up firmware from the Flash memory device.

The device reduces power consumption in the **standby mode** when it detects specific voltage levels on CE# and RESET#, or when addresses have been stable for a specified period of time.

The **Write Protect (WP#)** feature protects the first or last sector by asserting a logic low on the WP#/ACC pin. The protected sector will still be protected even during accelerated programming.

The **Secured Silicon Sector** provides a 128-word/256-byte area for code or data that can be permanently protected. Once this sector is protected, no further changes within the sector can occur.

AMD MirrorBit flash technology combines years of Flash memory manufacturing experience to produce the highest levels of quality, reliability and cost effectiveness. The device electrically erases all bits within a sector simultaneously via hot-hole assisted erase. The data is programmed using hot electron injection.

MIRRORBIT 32 MBIT DEVICE FAMILY

查询"L320ML11NI"供应商

Device	Bus	Sector Architecture	Packages	V_{IO}	RY/BY#	WP#, ACC	WP# Protection
LV033MU	x8	Uniform (64 Kbyte)	40-pin TSOP (std. & rev. pinout), 48-ball FBGA	Yes	Yes	ACC only	No WP#
LV320MT/B	x8/x16	Boot (8 x 8 Kbyte at top & bottom)	48-pin TSOP, 48-ball Fine-pitch BGA, 64-ball Fortified BGA	No	Yes	WP#/ACC pin	2 x 8 Kbyte top or bottom
LV320MH/L	x8/x16	Uniform (64 Kbyte)	56-pin TSOP (std. & rev. pinout), 64 Fortified BGA	Yes	Yes	WP#/ACC pin	1 x 64 Kbyte high or low

RELATED DOCUMENTS

To download related documents, click on the following links or go to www.amd.com→Flash Memory→Product Information→MirrorBit→Flash Information→Technical Documentation.

MirrorBit™ Flash Memory Write Buffer Programming and Page Buffer Read

Implementing a Common Layout for AMD MirrorBit and Intel StrataFlash Memory Devices

Migrating from Single-byte to Three-byte Device IDs

AMD MirrorBit™ White Paper

TABLE OF CONTENTS

查询"L320ML11NI"供应商

Product Selector Guide 5
Block Diagram 5
Connection Diagrams 6
Logic Symbol 8
Ordering Information 9
Device Bus Operations 10
Table 1. Device Bus Operations 10
VersatileIO™ (V_{IO}) Control 10
Requirements for Reading Array Data 11
Page Mode Read 11
Writing Commands/Command Sequences 11
Write Buffer 11
Accelerated Program Operation 11
Autoselect Functions 11
Automatic Sleep Mode 12
RESET#: Hardware Reset Pin 12
Output Disable Mode 12
Table 2. Sector Address Table 13
Table 3. Autoselect Codes, (High Voltage Method) 15
Sector Group Protection and Unprotection 16
Table 4. Sector Group Protection/Unprotection Address Table 16
Temporary Sector Group Unprotect 17
Figure 1. Temporary Sector Group Unprotect Operation 17
Figure 2. In-System Sector Group Protect/Unprotect Algorithms 18
Secured Silicon Sector Flash Memory Region 19
Table 5. Secured Silicon Sector Contents 19
Figure 3. Secured Silicon Sector Protect Verify 20
Hardware Data Protection 20
Low VCC Write Inhibit 20
Write Pulse “Glitch” Protection 20
Logical Inhibit 20
Power-Up Write Inhibit 20
Common Flash Memory Interface (CFI) 20
Table 6. CFI Query Identification String 21
Table 7. System Interface String 21
Table 8. Device Geometry Definition 22
Table 9. Primary Vendor-Specific Extended Query 23
Command Definitions 24
Reading Array Data 24
Reset Command 24
Autoselect Command Sequence 24
Enter Secured Silicon Sector/Exit Secured Silicon Sector Command Sequence 25
Word/Byte Program Command Sequence 25
Unlock Bypass Command Sequence 25
Write Buffer Programming 25
Accelerated Program 26
Figure 4. Write Buffer Programming Operation 27
Figure 5. Program Operation 28
Program Suspend/Program Resume Command Sequence 28
Figure 6. Program Suspend/Program Resume 29
Chip Erase Command Sequence 29
Sector Erase Command Sequence 29
Erase Suspend/Erase Resume Commands 30
Figure 7. Erase Operation 30
Table 10. Command Definitions (x16 Mode, BYTE# = V_{IH}) 31
Table 11. Command Definitions (x8 Mode, BYTE# = V_{IL}) 32
Write Operation Status 33
DQ7: Data# Polling 33
Figure 8. Data# Polling Algorithm 33
DQ6: Toggle Bit I 34
Figure 9. Toggle Bit Algorithm 35
DQ2: Toggle Bit II 35
Reading Toggle Bits DQ6/DQ2 35
DQ5: Exceeded Timing Limits 36
DQ3: Sector Erase Timer 36
DQ1: Write-to-Buffer Abort 36
Table 12. Write Operation Status 36
Figure 10. Maximum Negative Overshoot Waveform 37
Figure 11. Maximum Positive Overshoot Waveform 37
Operating Ranges 37
DC Characteristics 38
Test Conditions 39
Figure 12. Test Setup 39
Table 13. Test Specifications 39
Key to Switching Waveforms 39
Figure 13. Input Waveforms and Measurement Levels 39
AC Characteristics 40
Read-Only Operations 40
Figure 14. Read Operation Timing 40
Figure 15. Page Read Timings 41
Hardware Reset (RESET#) 42
Figure 16. Reset Timings 42
Erase and Program Operations 43
Figure 17. Program Operation Timings 44
Figure 18. Accelerated Program Timing Diagram 44
Figure 19. Chip/Sector Erase Operation Timings 45
Figure 20. Data# Polling Timings (During Embedded Algorithms) 46
Figure 21. Toggle Bit Timings (During Embedded Algorithms) 47
Figure 22. DQ2 vs. DQ6 47
Temporary Sector Unprotect 48
Figure 23. Temporary Sector Group Unprotect Timing Diagram 48
Figure 24. Sector Group Protect and Unprotect Timing Diagram 49
Alternate CE# Controlled Erase and Program Operations 50
Figure 25. Alternate CE# Controlled Write (Erase/Program) Operation Timings 51
Erase And Programming Performance 52
Latchup Characteristics 52
TSOP Pin and BGA Package Capacitance 53
Data Retention 53
Physical Dimensions 54
TS056/TSR056—56-Pin Standard and Reverse Pinout Thin Small Outline Package (TSOP) 54
LAA064—64-Ball Fortified Ball Grid Array (FBGA) 13 x 11 mm Package 55
Revision Summary 56

PRODUCT SELECTOR GUIDE

查询"L320ML11NI"供应商

Part Number		Am29LV320MH/L					
Speed Option	V_{CC} = 3.0–3.6 V	**90R** (V_{IO} = 3.0–3.6 V)	**101R** (V_{IO} = 2.7–3.6 V)	**112R** (V_{IO} = 1.65–3.6 V)		**120R** (V_{IO} = 1.65–3.6 V)	
	V_{CC} = 2.7–3.6 V		**101** (V_{IO} = 2.7–3.6 V)		**112** (V_{IO} = 1.65–3.6 V)		**120** (V_{IO} = 1.65–3.6 V)
Max. Access Time (ns)		90	100	110		120	
Max. CE# Access Time (ns)		90	100	110		120	
Max. Page access Time (t_{PACC})		25	30	30	40	30	40
Max. OE# Access Time (ns)		25	30	30	40	30	40

Note:

1. *See AC Characteristics for full specifications.*
2. *For the Am29LV320MH/L device, the last numeric digit in the speed option (e.g. 90R, 101, 112, 120) is used for internal purposes only. Please use OPNs as listed when placing orders.*

BLOCK DIAGRAM

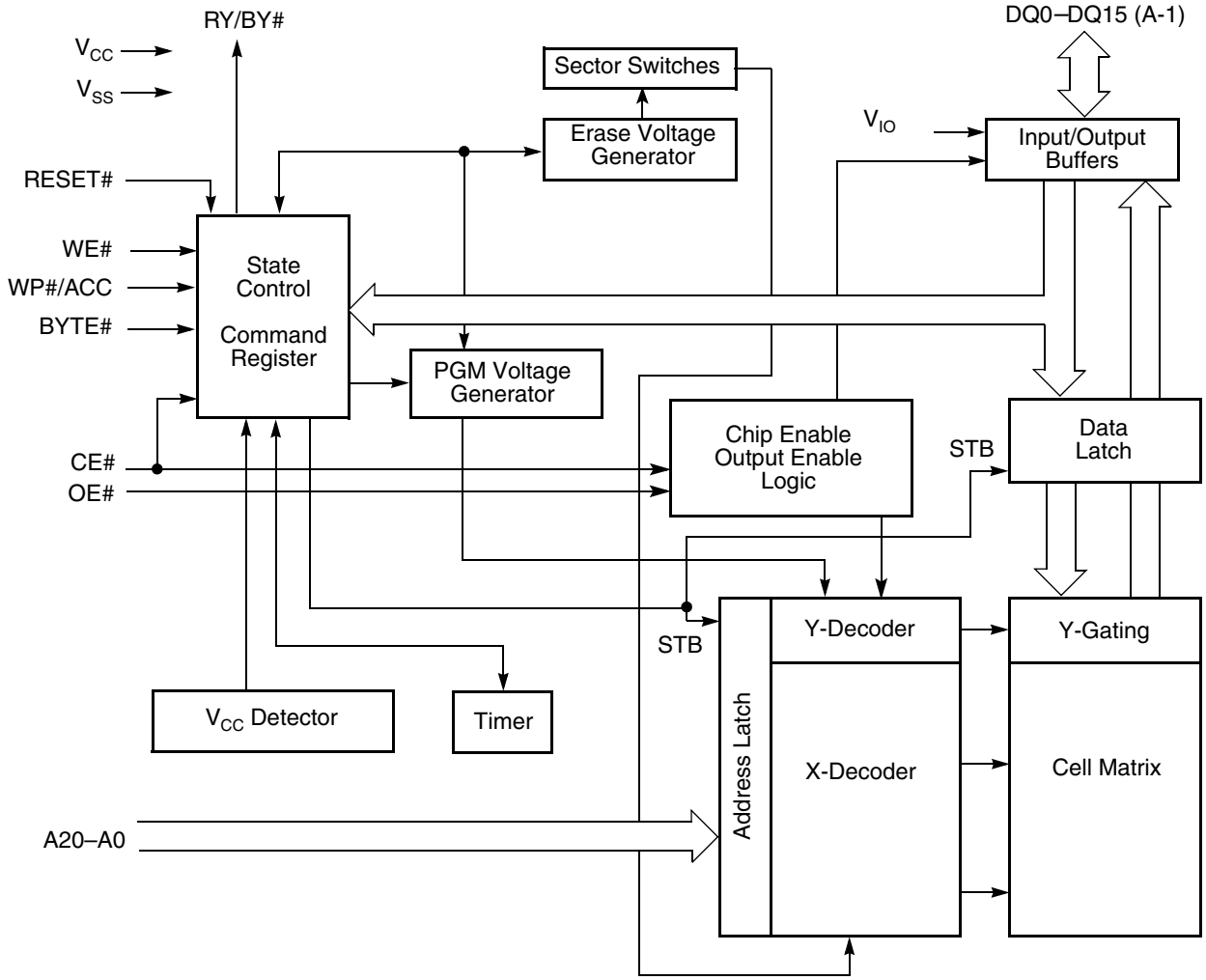

CONNECTION DIAGRAMS

查询"L320ML11NI"供应商

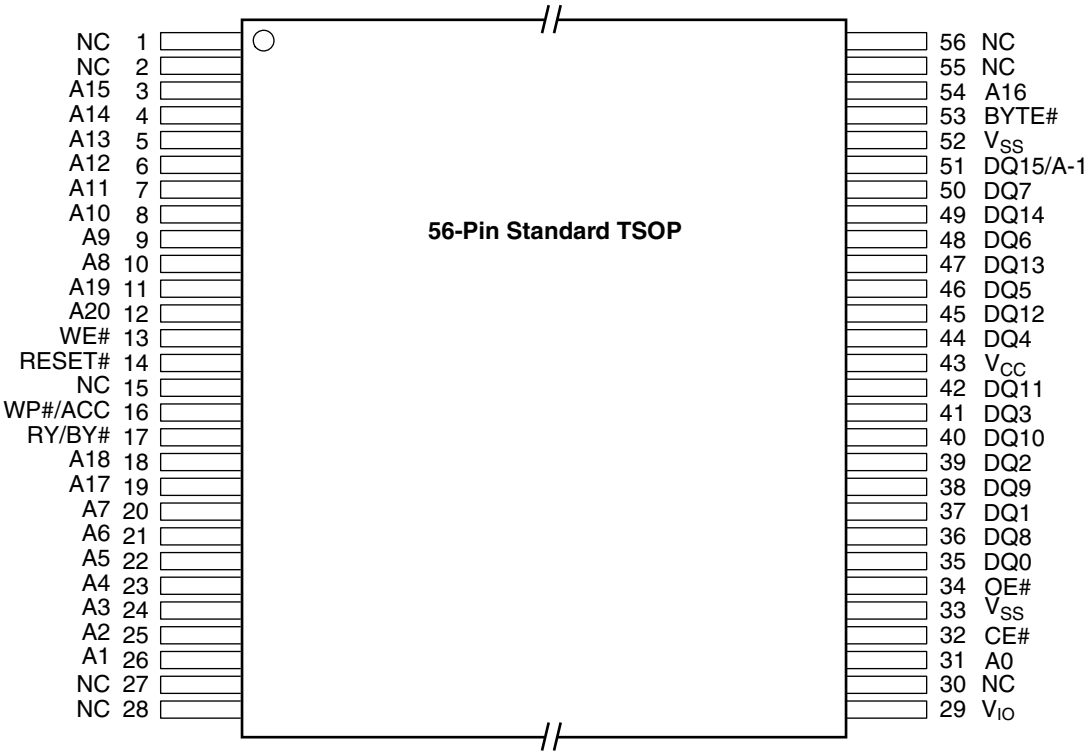

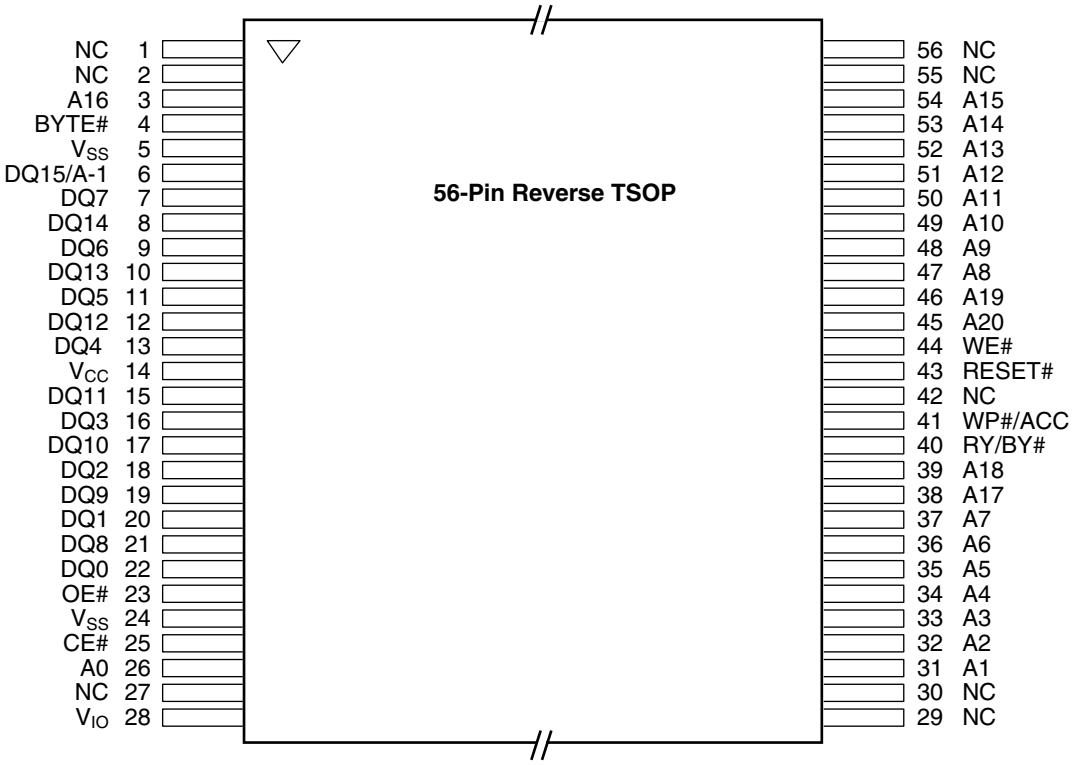

CONNECTION DIAGRAMS

查询"L320ML11NI"供应商

64-Ball Fortified BGA
Top View, Balls Facing Down

A8	B8	C8	D8	E8	F8	G8	H8
NC	NC	NC	V_{IO}	V_{SS}	NC	NC	NC
A7	B7	C7	D7	E7	F7	G7	H7
A13	A12	A14	A15	A16	BYTE#	DQ15/A-1	V_{SS}
A6	B6	C6	D6	E6	F6	G6	H6
A9	A8	A10	A11	DQ7	DQ14	DQ13	DQ6
A5	B5	C5	D5	E5	F5	G5	H5
WE#	RESET#	NC	A19	DQ5	DQ12	V_{CC}	DQ4
A4	B4	C4	D4	E4	F4	G4	H4
RY/BY#	WP#/ACC	A18	A20	DQ2	DQ10	DQ11	DQ3
A3	B3	C3	D3	E3	F3	G3	H3
A7	A17	A6	A5	DQ0	DQ8	DQ9	DQ1
A2	B2	C2	D2	E2	F2	G2	H2
A3	A4	A2	A1	A0	CE#	OE#	V_{SS}
A1	B1	C1	D1	E1	F1	G1	H1
NC	NC	NC	NC	NC	V_{IO}	NC	NC

Special Package Handling Instructions

Special handling is required for Flash Memory products in molded packages (TSOP, BGA, SSOP, PDIP, PLCC).

The package and/or data integrity may be compromised if the package body is exposed to temperatures above 150°C for prolonged periods of time.

PIN DESCRIPTION

查询"L320ML11NI"供应商

A20–A0	=	21 Address inputs
DQ14–DQ0	=	15 Data inputs/outputs
DQ15/A-1	=	DQ15 (Data input/output, word mode), A-1 (LSB Address input, byte mode)
CE#	=	Chip Enable input
OE#	=	Output Enable input
WE#	=	Write Enable input
WP#/ACC	=	Hardware Write Protect input/Programming Acceleration input
RESET#	=	Hardware Reset Pin input
RY/BY#	=	Ready/Busy output
BYTE#	=	Selects 8-bit or 16-bit mode
V_{CC}	=	3.0 volt-only single power supply (see Product Selector Guide for speed options and voltage supply tolerances)
V_{IO}	=	Output Buffer power
V_{SS}	=	Device Ground
NC	=	Pin Not Connected Internally

LOGIC SYMBOL

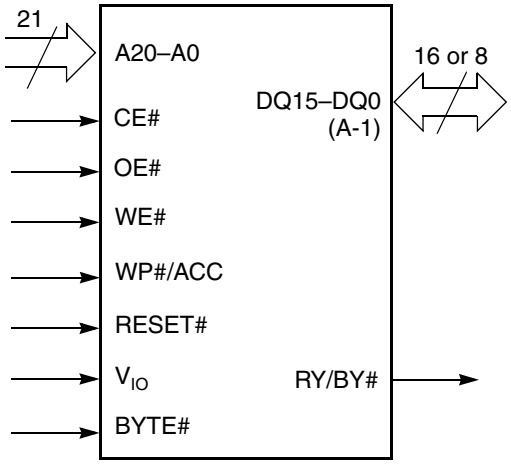

ORDERING INFORMATION

查询"L320ML11NI"供应商

Standard Products

AMD standard products are available in several packages and operating ranges. The order number (Valid Combination) is formed by a combination of the following:

Am29LV320M H 120R PC I

TEMPERATURE RANGE

I = Industrial (–40°C to +85°C)
F = Industrial (–40°C to +85°C) with Pb-free Packages

PACKAGE TYPE

E = 56-Pin Thin Small Outline Package (TSOP) Standard Pinout (TS 056)
F = 56-Pin Thin Small Outline Package (TSOP) Reverse Pinout (TSR056)
PC = 64-Ball Fortified Ball Grid Array
1.0 mm pitch, 13 x 11 mm package (LAA064)

SPEED OPTION

See Product Selector Guide and Valid Combinations

SECTOR ARCHITECTURE AND WP# PROTECTION (WP# = V_{IL})

H = Uniform sector device, highest address sector protected
L = Uniform sector device, lowest address sector protected

DEVICE NUMBER/DESCRIPTION

Am29LV320M
32 Megabit (2 M x 16-Bit/4 M x 8-Bit) MirrorBit™ Uniform Sector Flash Memory
with VersatileIO™ Control, 3.0 Volt-only Read, Program, and Erase

Valid Combinations for TSOP Package		Speed (ns)	V_{IO} Range	V_{CC} Range
Am29LV320MH90R, Am29LV320ML90R	EI, FI, EF	90	3.0–3.6 V	3.0–3.6 V
Am29LV320MH101, Am29LV320ML101		100	2.7–3.6 V	2.7–3.6 V
Am29LV320MH112, Am29LV320ML112		110	1.65–3.6 V	
Am29LV320MH120, Am29LV320ML120		120	1.65–3.6 V	
Am29LV320MH101R, Am29LV320ML101R		100	2.7–3.6 V	3.0–3.6 V
Am29LV320MH112R, Am29LV320ML112R		110	1.65–3.6 V	
Am29LV320MH120R, Am29LV320ML120R		120	1.65–3.6 V	

Valid Combinations for Fortified BGA Package				Speed (ns)	V_{IO} Range	V_{CC} Range
Order Number		Package Marking				
Am29LV320MH90R, Am29LV320ML90R	PCI, PCF	L320MH90N, L320ML90N	I, F	90	3.0–3.6 V	3.0–3.6 V
Am29LV320MH101, Am29LV320ML101		L320MH01P, L320ML01P		100	2.7–3.6 V	2.7–3.6 V
Am29LV320MH112, Am29LV320ML112		L320MH11P, L320ML11P		110	1.65–3.6 V	
Am29LV320MH120, Am29LV320ML120		L320MH12P, L320ML12P		120	1.65–3.6 V	
Am29LV320MH101R, Am29LV320ML101R		L320MH01N, L320ML01N		100	2.7–3.6 V	3.0–3.6 V
Am29LV320MH112R, Am29LV320ML112R		L320MH11N, L320ML11N		110	1.65–3.6 V	
Am29LV320MH120R, Am29LV320ML120R		L320MH12N, L320ML12N		120	1.65–3.6 V	

Valid Combinations

Valid Combinations list configurations planned to be supported in volume for this device. Consult the local AMD sales office to confirm availability of specific valid combinations and to check on newly released combinations.

Note:
For the Am29LV320MH/L device, the last numeric digit in the speed option (e.g. 90R, 101, 112, 120) is used for internal purposes only. Please use OPNs as listed when placing orders.

DEVICE BUS OPERATIONS

查询"L320ML11NI"供应商

This section describes the requirements and use of the device bus operations, which are initiated through the internal command register. The command register itself does not occupy any addressable memory location. The register is a latch used to store the commands, along with the address and data information needed to execute the command. The contents of the register serve as inputs to the internal state machine. The state machine outputs dictate the function of the device. Table 1 lists the device bus operations, the inputs and control levels they require, and the resulting output. The following subsections describe each of these operations in further detail.

Table 1. Device Bus Operations

Operation	CE#	OE#	WE#	RESET#	WP#	ACC	Addresses (Note 2)	DQ0–DQ7	DQ8–DQ15 BYTE# = V_{IH}	DQ8–DQ15 BYTE# = V_{IL}
Read	L	L	H	H	X	X	A_{IN}	D_{OUT}	D_{OUT}	DQ8–DQ14 = High-Z, DQ15 = A-1
Write (Program/Erase)	L	H	L	H	(Note 3)	X	A_{IN}	(Note 4)	(Note 4)	
Accelerated Program	L	H	L	H	(Note 3)	V_{HH}	A_{IN}	(Note 4)	(Note 4)	
Standby	$V_{CC} \pm$ 0.3 V	X	X	$V_{CC} \pm$ 0.3 V	X	H	X	High-Z	High-Z	High-Z
Output Disable	L	H	H	H	X	X	X	High-Z	High-Z	High-Z
Reset	X	X	X	L	X	X	X	High-Z	High-Z	High-Z
Sector Group Protect (Note 2)	L	H	L	V_{ID}	H	X	SA, A6 =L, A3=L, A2=L, A1=H, A0=L	(Note 4)	X	X
Sector Group Unprotect (Note 2)	L	H	L	V_{ID}	H	X	SA, A6=H, A3=L, A2=L, A1=H, A0=L	(Note 4)	X	X
Temporary Sector Group Unprotect	X	X	X	V_{ID}	H	X	A_{IN}	(Note 4)	(Note 4)	High-Z

Legend: *L = Logic Low = V_{IL}, H = Logic High = V_{IH}, V_{ID} = 11.5–12.5 V, V_{HH} = 11.5–12.5 V, X = Don't Care, SA = Sector Address, A_{IN} = Address In, D_{IN} = Data In, D_{OUT} = Data Out*

Notes:

1. *Addresses are A20:A0 in word mode; A20:A-1 in byte mode. Sector addresses are A20:A15 in both modes.*
2. *The sector protect and sector unprotect functions may also be implemented via programming equipment. See the "Sector Group Protection and Unprotection" section.*
3. *If WP# = V_{IL}, the first or last sector remains protected. If WP# = V_{IH}, the first or last sector will be protected or unprotected as determined by the method described in "Sector Group Protection and Unprotection". All sectors are unprotected when shipped from the factory (The Secured Silicon Sector may be factory protected depending on version ordered.)*
4. *D_{IN} or D_{OUT} as required by command sequence, data polling, or sector protect algorithm (see Figure 2).*

Word/Byte Configuration

The BYTE# pin controls whether the device data I/O pins operate in the byte or word configuration. If the BYTE# pin is set at logic '1', the device is in word configuration, DQ0–DQ15 are active and controlled by CE# and OE#.

If the BYTE# pin is set at logic '0', the device is in byte configuration, and only data I/O pins DQ0–DQ7 are active and controlled by CE# and OE#. The data I/O pins DQ8–DQ14 are tri-stated, and the DQ15 pin is used as an input for the LSB (A-1) address function.

VersatileIO™ (V_{IO}) Control

The VersatileIO™ (V_{IO}) control allows the host system to set the voltage levels that the device generates and tolerates on CE# and DQ I/Os to the same voltage level that is asserted on V_{IO}. See "Ordering Information" on page 9 for V_{IO} options on this device.

For example, a $V_{I/O}$ of 1.65–3.6 volts allows for I/O at the "1.8 volt level" driving and receiving signals to and from other 1.8 or 3 V devices on the same data bus.

查询"Am29LV320MH/L"供应商

Requirements for Reading Array Data

To read array data from the outputs, the system must drive the CE# and OE# pins to V_{IL}. CE# is the power control and selects the device. OE# is the output control and gates array data to the output pins. WE# should remain at V_{IH}.

The internal state machine is set for reading array data upon device power-up, or after a hardware reset. This ensures that no spurious alteration of the memory content occurs during the power transition. No command is necessary in this mode to obtain array data. Standard microprocessor read cycles that assert valid addresses on the device address inputs produce valid data on the device data outputs. The device remains enabled for read access until the command register contents are altered.

See "Reading Array Data" for more information. Refer to the AC Read-Only Operations table for timing specifications and to Figure 13 for the timing diagram. Refer to the DC Characteristics table for the active current specification on reading array data.

Page Mode Read

The device is capable of fast page mode read and is compatible with the page mode Mask ROM read operation. This mode provides faster read access speed for random locations within a page. The page size of the device is 4 words/8 bytes. The appropriate page is selected by the higher address bits A(max)–A2. Address bits A1–A0 in word mode (A1–A-1 in byte mode) determine the specific word within a page. This is an asynchronous operation; the microprocessor supplies the specific word location.

The random or initial page access is equal to t_{ACC} or t_{CE} and subsequent page read accesses (as long as the locations specified by the microprocessor falls within that page) is equivalent to t_{PACC}. When CE# is deasserted and reasserted for a subsequent access, the access time is t_{ACC} or t_{CE}. Fast page mode accesses are obtained by keeping the "read-page addresses" constant and changing the "intra-read page" addresses.

Writing Commands/Command Sequences

To write a command or command sequence (which includes programming data to the device and erasing sectors of memory), the system must drive WE# and CE# to V_{IL}, and OE# to V_{IH}.

The device features an **Unlock Bypass** mode to facilitate faster programming. Once the device enters the Unlock Bypass mode, only two write cycles are required to program a word or byte, instead of four. The "Word/Byte Program Command Sequence" section has details on programming data to the device using both standard and Unlock Bypass command sequences.

An erase operation can erase one sector, multiple sectors, or the entire device. Table 2 indicates the address space that each sector occupies.

Refer to the DC Characteristics table for the active current specification for the write mode. The AC Characteristics section contains timing specification tables and timing diagrams for write operations.

Write Buffer

Write Buffer Programming allows the system to write a maximum of 16 words/32 bytes in one programming operation. This results in faster effective programming time than the standard programming algorithms. See "Write Buffer" for more information.

Accelerated Program Operation

The device offers accelerated program operations through the ACC function. This is one of two functions provided by the WP#/ACC pin. This function is primarily intended to allow faster manufacturing throughput at the factory.

If the system asserts V_{HH} on this pin, the device automatically enters the aforementioned Unlock Bypass mode, temporarily unprotects any protected sectors, and uses the higher voltage on the pin to reduce the time required for program operations. The system would use a two-cycle program command sequence as required by the Unlock Bypass mode. Removing V_{HH} from the WP#/ACC pin returns the device to normal operation. *Note that the WP#/ACC pin must not be at V_{HH} for operations other than accelerated programming, or device damage may result. In addition, no external pullup is necessary since the WP#/ACC pin has internal pullup to V_{CC}.*

Autoselect Functions

If the system writes the autoselect command sequence, the device enters the autoselect mode. The system can then read autoselect codes from the internal register (which is separate from the memory array) on DQ7–DQ0. Standard read cycle timings apply in this mode. Refer to the Autoselect Mode and Autoselect Command Sequence sections for more information.

Standby Mode

When the system is not reading or writing to the device, it can place the device in the standby mode. In this mode, current consumption is greatly reduced,

and the outputs are placed in the high impedance state regardless of the OE# input.

查询"LS20MEI1NI"供应商

The device enters the CMOS standby mode when the CE# and RESET# pins are both held at V_{IO} ± 0.3 V. (Note that this is a more restricted voltage range than V_{IH}.) If CE# and RESET# are held at V_{IH}, but not within V_{IO} ± 0.3 V, the device will be in the standby mode, but the standby current will be greater. The device requires standard access time (t_{CE}) for read access when the device is in either of these standby modes, before it is ready to read data.

If the device is deselected during erasure or programming, the device draws active current until the operation is completed.

Refer to the DC Characteristics table for the standby current specification.

Automatic Sleep Mode

The automatic sleep mode minimizes Flash device energy consumption. The device automatically enables this mode when addresses remain stable for t_{ACC} + 30 ns. The automatic sleep mode is independent of the CE#, WE#, and OE# control signals. Standard address access timings provide new data when addresses are changed. While in sleep mode, output data is latched and always available to the system. Refer to the DC Characteristics table for the automatic sleep mode current specification.

RESET#: Hardware Reset Pin

The RESET# pin provides a hardware method of resetting the device to reading array data. When the RESET# pin is driven low for at least a period of t_{RP}, the device immediately terminates any operation in progress, tristates all output pins, and ignores all read/write commands for the duration of the RESET# pulse. The device also resets the internal state machine to reading array data. The operation that was interrupted should be reinitiated once the device is ready to accept another command sequence, to ensure data integrity.

Current is reduced for the duration of the RESET# pulse. When RESET# is held at V_{SS}±0.3 V, the device draws CMOS standby current (I_{CC4}). If RESET# is held at V_{IL} but not within V_{SS}±0.3 V, the standby current will be greater.

The RESET# pin may be tied to the system reset circuitry. A system reset would thus also reset the Flash memory, enabling the system to read the boot-up firmware from the Flash memory.

Refer to the AC Characteristics tables for RESET# parameters and to Figure 16 for the timing diagram.

Output Disable Mode

When the OE# input is at V_{IH}, output from the device is disabled. The output pins are placed in the high impedance state.

查询"L320ML11NI"供应商

Table 2. Sector Address Table

Sector	A20-A15						Sector Size (Kbytes/Kwords)	8-bit Address Range (in hexadecimal)	16-bit Address Range (in hexadecimal)
SA0	0	0	0	0	0	0	64/32	000000–00FFFF	000000–007FFF
SA1	0	0	0	0	0	1	64/32	010000–01FFFF	008000–00FFFF
SA2	0	0	0	0	1	0	64/32	020000–02FFFF	010000–017FFF
SA3	0	0	0	0	1	1	64/32	030000–03FFFF	018000–01FFFF
SA4	0	0	0	1	0	0	64/32	040000–04FFFF	020000–027FFF
SA5	0	0	0	1	0	1	64/32	050000–05FFFF	028000–02FFFF
SA6	0	0	0	1	1	0	64/32	060000–06FFFF	030000–037FFF
SA7	0	0	0	1	1	1	64/32	070000–07FFFF	038000–03FFFF
SA8	0	0	1	0	0	0	64/32	080000–08FFFF	040000–047FFF
SA9	0	0	1	0	0	1	64/32	090000–09FFFF	048000–04FFFF
SA10	0	0	1	0	1	0	64/32	0A0000–0AFFFF	050000–057FFF
SA11	0	0	1	0	1	1	64/32	0B0000–0BFFFF	058000–05FFFF
SA12	0	0	1	1	0	0	64/32	0C0000–0CFFFF	060000–067FFF
SA13	0	0	1	1	0	1	64/32	0D0000–0DFFFF	068000–06FFFF
SA14	0	0	1	1	1	0	64/32	0E0000–0EFFFF	070000–077FFF
SA15	0	0	1	1	1	1	64/32	0F0000–0FFFFF	078000–07FFFF
SA16	0	1	0	0	0	0	64/32	100000–10FFFF	080000–087FFF
SA17	0	1	0	0	0	1	64/32	110000–11FFFF	088000–08FFFF
SA18	0	1	0	0	1	0	64/32	120000–12FFFF	090000–097FFF
SA19	0	1	0	0	1	1	64/32	130000–13FFFF	098000–09FFFF
SA20	0	1	0	1	0	0	64/32	140000–14FFFF	0A0000–0A7FFF
SA21	0	1	0	1	0	1	64/32	150000–15FFFF	0A8000–0AFFFF
SA22	0	1	0	1	1	0	64/32	160000–16FFFF	0B0000–0B7FFF
SA23	0	1	0	1	1	1	64/32	170000–17FFFF	0B8000–0BFFFF
SA24	0	1	1	0	0	0	64/32	180000–18FFFF	0C0000–0C7FFF
SA25	0	1	1	0	0	1	64/32	190000–19FFFF	0C8000–0CFFFF
SA26	0	1	1	0	1	0	64/32	1A0000–1AFFFF	0D0000–0D7FFF
SA27	0	1	1	0	1	1	64/32	1B0000–1BFFFF	0D8000–0DFFFF
SA28	0	1	1	1	0	0	64/32	1C0000–1CFFFF	0E0000–0E7FFF
SA29	0	1	1	1	0	1	64/32	1D0000–1DFFFF	0E8000–0EFFFF
SA30	0	1	1	1	1	0	64/32	1E0000–1EFFFF	0F0000–0F7FFF
SA31	0	1	1	1	1	1	64/32	1F0000–1FFFFF	0F8000–0FFFFF
SA32	1	0	0	0	0	0	64/32	200000–20FFFF	100000–107FFF
SA33	1	0	0	0	0	1	64/32	210000–21FFFF	108000–10FFFF
SA34	1	0	0	0	1	0	64/32	220000–22FFFF	110000–117FFF
SA35	1	0	0	0	1	1	64/32	230000–23FFFF	118000–11FFFF
SA36	1	0	0	1	0	0	64/32	240000–24FFFF	120000–127FFF
SA37	1	0	0	1	0	1	64/32	250000–25FFFF	128000–12FFFF
SA38	1	0	0	1	1	0	64/32	260000–26FFFF	130000–137FFF
SA39	1	0	0	1	1	1	64/32	270000–27FFFF	138000–13FFFF
SA40	1	0	1	0	0	0	64/32	280000–28FFFF	140000–147FFF
SA41	1	0	1	0	0	1	64/32	290000–29FFFF	148000–14FFFF
SA42	1	0	1	0	1	0	64/32	2A0000–2AFFFF	150000–157FFF
SA43	1	0	1	0	1	1	64/32	2B0000–2BFFFF	158000–15FFFF

查询"L320ML11NI"供应商

Table 2. Sector Address Table (Continued)

Sector	A20-A15						Sector Size (Kbytes/Kwords)	8-bit Address Range (in hexadecimal)	16-bit Address Range (in hexadecimal)
SA44	1	0	1	1	0	0	64/32	2C0000–2CFFFF	160000–167FFF
SA45	1	0	1	1	0	1	64/32	2D0000–2DFFFF	168000–16FFFF
SA46	1	0	1	1	1	0	64/32	2E0000–2EFFFF	170000–177FFF
SA47	1	0	1	1	1	1	64/32	2F0000–2FFFFF	178000–17FFFF
SA48	1	1	0	0	0	0	64/32	300000–30FFFF	180000–187FFF
SA49	1	1	0	0	0	1	64/32	310000–31FFFF	188000–18FFFF
SA50	1	1	0	0	1	0	64/32	320000–32FFFF	190000–197FFF
SA51	1	1	0	0	1	1	64/32	330000–33FFFF	198000–19FFFF
SA52	1	1	0	1	0	0	64/32	340000–34FFFF	1A0000–1A7FFF
SA53	1	1	0	1	0	1	64/32	350000–35FFFF	1A8000–1AFFFF
SA54	1	1	0	1	1	0	64/32	360000–36FFFF	1B0000–1B7FFF
SA55	1	1	0	1	1	1	64/32	370000–37FFFF	1B8000–1BFFFF
SA56	1	1	1	0	0	0	64/32	380000–38FFFF	1C0000–1C7FFF
SA57	1	1	1	0	0	1	64/32	390000–39FFFF	1C8000–1CFFFF
SA58	1	1	1	0	1	0	64/32	3A0000–3AFFFF	1D0000–1D7FFF
SA59	1	1	1	0	1	1	64/32	3B0000–3BFFFF	1D8000–1DFFFF
SA60	1	1	1	1	0	0	64/32	3C0000–3CFFFF	1E0000–1E7FFF
SA61	1	1	1	1	0	1	64/32	3D0000–3DFFFF	1E8000–1EFFFF
SA62	1	1	1	1	1	0	64/32	3E0000–3EFFFF	1F0000–1F7FFF
SA63	1	1	1	1	1	1	64/32	3F0000–3FFFFF	1F8000–1FFFFF

Notes: *The address range is A20:A-1 in byte mode (BYTE# = V_{IL}) or A20:A0 in word mode (BYTE# = V_{IH}).*

Autoselect Mode

查询"L320ML11NI"供应商

The autoselect mode provides manufacturer and device identification, and sector protection verification, through identifier codes output on DQ7–DQ0. This mode is primarily intended for programming equipment to automatically match a device to be programmed with its corresponding programming algorithm. However, the autoselect codes can also be accessed in-system through the command register.

When using programming equipment, the autoselect mode requires V_{ID} on address pin A9. Address pins A6, A3, A2, A1, and A0 must be as shown in Table 3.

In addition, when verifying sector protection, the sector address must appear on the appropriate highest order address bits (see Table 2). Table 3 shows the remaining address bits that are don't care. When all necessary bits have been set as required, the programming equipment may then read the corresponding identifier code on DQ7–DQ0.

To access the autoselect codes in-system, the host system can issue the autoselect command via the command register, as shown in Tables 10 and 11. This method does not require V_{ID}. Refer to the Autoselect Command Sequence section for more information.

Table 3. Autoselect Codes, (High Voltage Method)

Description		CE#	OE#	WE#	A20 to A15	A14 to A10	A9	A8 to A7	A6	A5 to A4	A3 to A2	A1	A0	DQ8 to DQ15		DQ7 to DQ0
														BYTE# = V_{IH}	BYTE# = V_{IL}	
Manufacturer ID: AMD		L	L	H	X	X	V_{ID}	X	L	X	L	L	L	00	X	01h
Device ID	Cycle 1	L	L	H	X	X	V_{ID}	X	L	X	L	L	H	22	X	7Eh
	Cycle 2										H	H	L	22	X	1Dh
	Cycle 3										H	H	H	22	X	00h
Sector Protection Verification		L	L	H	SA	X	V_{ID}	X	L	X	L	H	L	X	X	01h (protected), 00h (unprotected)
Secured Silicon Sector Indicator Bit (DQ7), WP# protects highest address sector		L	L	H	X	X	V_{ID}	X	L	X	L	H	H	X	X	98h (factory locked), 18h (not factory locked)
Secured Silicon Sector Indicator Bit (DQ7), WP# protects lowest address sector		L	L	H	X	X	V_{ID}	X	L	X	L	H	H	X	X	88h (factory locked), 08h (not factory locked)

Legend: *L = Logic Low = V_{IL}, H = Logic High = V_{IH}, SA = Sector Address, X = Don't care.*

Sector Group Protection and Unprotection

查询"L320ML11NI"供应商

The hardware sector group protection feature disables both program and erase operations in any sector group. In this device, a sector group consists of four adjacent sectors that are protected or unprotected at the same time (see Table 4). The hardware sector group unprotection feature re-enables both program and erase operations in previously protected sector groups. Sector group protection/unprotection can be implemented via two methods.

Sector protection/unprotection requires V_{ID} on the RESET# pin only, and can be implemented either in-system or via programming equipment. Figure 2 shows the algorithms and Figure 24 shows the timing diagram. This method uses standard microprocessor bus cycle timing. For sector group unprotect, all unprotected sector groups must first be protected prior to the first sector group unprotect write cycle.

The device is shipped with all sector groups unprotected. AMD offers the option of programming and protecting sector groups at its factory prior to shipping the device through AMD's ExpressFlash™ Service. Contact an AMD representative for details.

It is possible to determine whether a sector group is protected or unprotected. See the Autoselect Mode section for details.

Table 4. Sector Group Protection/Unprotection Address Table

Sector Group	A20–A15
SA0	000000
SA1	000001
SA2	000010
SA3	000011
SA4–SA7	0001xx
SA8–SA11	0010xx
SA12–SA15	0011xx
SA16–SA19	0100xx
SA20–SA23	0101xx
SA24–SA27	0110xx
SA28–SA31	0111xx
SA32–SA35	1000xx
SA36–SA39	1001xx
SA40–SA43	1010xx
SA44–SA47	1011xx
SA48–SA51	1100xx
SA52–SA55	1101xx
SA56–SA59	1110xx
SA60	111100
SA61	111101
SA62	111110
SA63	111111

Write Protect (WP#)

查询"L320ML11NJ"供应商

The Write Protect function provides a hardware method of protecting the first or last sector without using V_{ID}. Write Protect is one of two functions provided by the WP#/ACC input.

If the system asserts V_{IL} on the WP#/ACC pin, the device disables program and erase functions in the first or last sector independently of whether those sectors were protected or unprotected using the method described in "Sector Group Protection and Unprotection". Note that if WP#/ACC is at V_{IL} when the device is in the standby mode, the maximum input load current is increased. See the table in "DC Characteristics".

If the system asserts V_{IH} on the WP#/ACC pin, the device reverts to whether the first or last sector was previously set to be protected or unprotected using the method described in "Sector Group Protection and Unprotection". *Note: No external pullup is necessary since the WP#/ACC pin has internal pullup to V_{CC}.*

Temporary Sector Group Unprotect

*(**Note:** In this device, a sector group consists of four adjacent sectors that are protected or unprotected at the same time (see Table 4).*

This feature allows temporary unprotection of previously protected sector groups to change data in-system. The Sector Group Unprotect mode is activated by setting the RESET# pin to V_{ID}. During this mode, formerly protected sector groups can be programmed or erased by selecting the sector group addresses. Once V_{ID} is removed from the RESET# pin, all the previously protected sector groups are protected again. Figure 1 shows the algorithm, and Figure 23 shows the timing diagrams, for this feature.

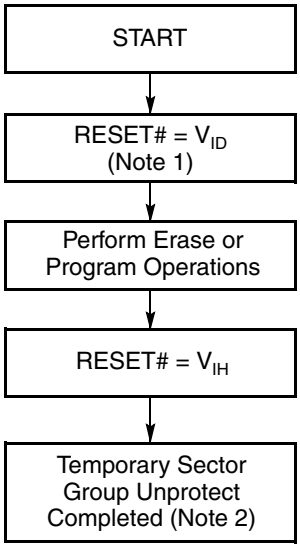

Notes:

1. *All protected sector groups unprotected (If WP# = V_{IL}, the first or last sector will remain protected).*
2. *All previously protected sector groups are protected once again.*

Figure 1. Temporary Sector Group Unprotect Operation

查询"L320ML11NI"供应商

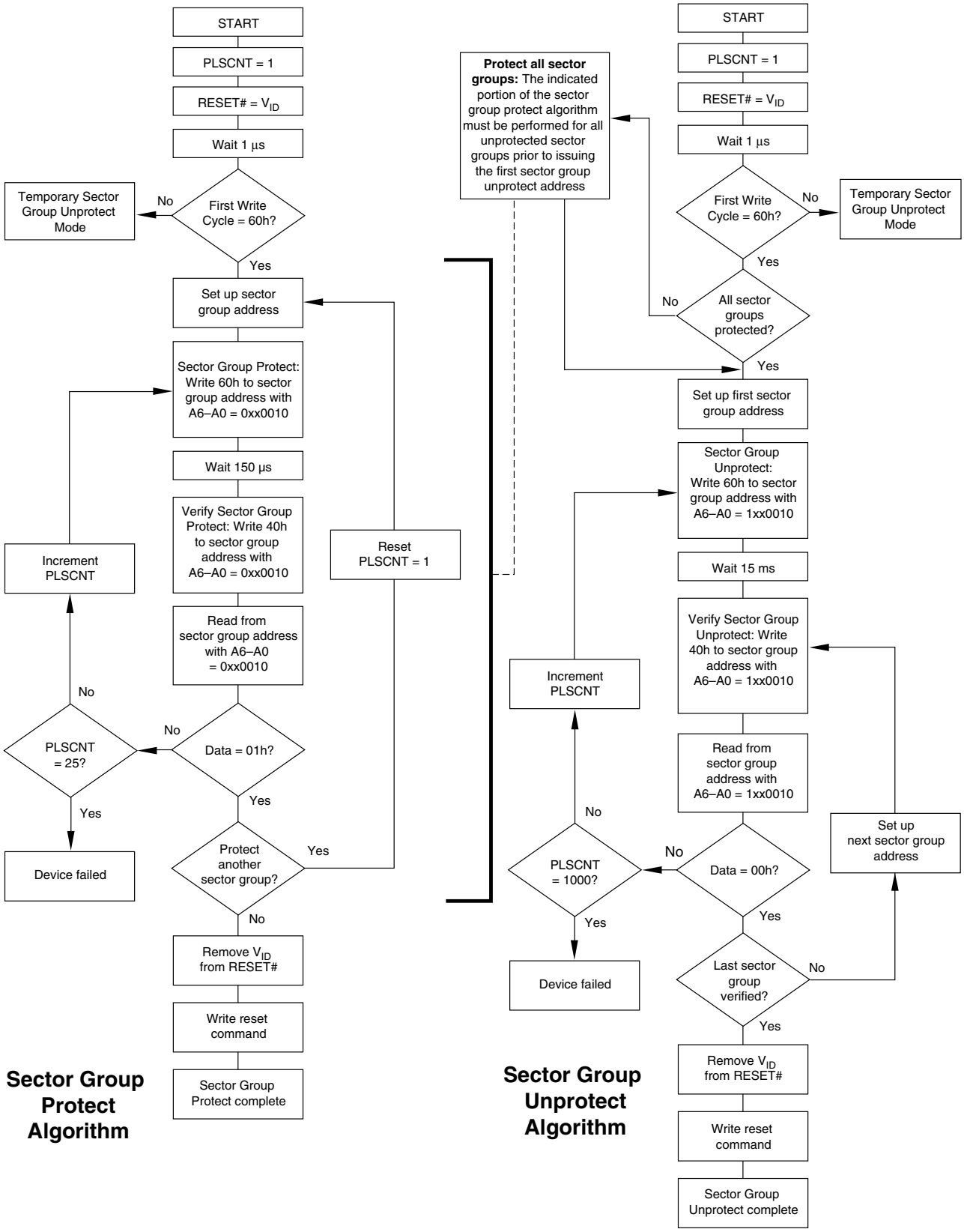

Figure 2. In-System Sector Group Protect/Unprotect Algorithms

Secured Silicon Sector Flash Memory Region

查询"L320MH-11NI"供应商

The Secured Silicon Sector feature provides a Flash memory region that enables permanent part identification through an Electronic Serial Number (ESN). The Secured Silicon Sector is 256 bytes in length, and uses a Secured Silicon Sector Indicator Bit (DQ7) to indicate whether or not the Secured Silicon Sector is locked when shipped from the factory. This bit is permanently set at the factory and cannot be changed, which prevents cloning of a factory locked part. This ensures the security of the ESN once the product is shipped to the field.

AMD offers the device with the Secured Silicon Sector either customer lockable (standard shipping option) or factory locked (contact an AMD sales representative for ordering information). The customer-lockable version is shipped with the Secured Silicon Sector unprotected, allowing customers to program the sector after receiving the device. The customer-lockable version also has the Secured Silicon Sector Indicator Bit permanently set to a "0." The factory-locked version is always protected when shipped from the factory, and has the Secured Silicon Sector Indicator Bit permanently set to a "1." Thus, the Secured Silicon Sector Indicator Bit prevents customer-lockable devices from being used to replace devices that are factory locked. *Note that the ACC function and unlock bypass modes are not available when the Secured Silicon Sector is enabled.*

The Secured Silicon sector address space in this device is allocated as follows:

Table 5. Secured Silicon Sector Contents

Secured Silicon Sector Address Range	Customer Lockable	ESN Factory Locked	ExpressFlash Factory Locked
000000h–000007h	Determined by customer	ESN	ESN or determined by customer
000008h–00007Fh		Unavailable	Determined by customer

The system accesses the Secured Silicon Sector through a command sequence (see "Enter Secured Silicon Sector/Exit Secured Silicon Sector Command Sequence"). After the system has written the Enter Secured Silicon Sector command sequence, it may read the Secured Silicon Sector by using the addresses normally occupied by the first sector (SA0). This mode of operation continues until the system issues the Exit Secured Silicon Sector command sequence, or until power is removed from the device. On power-up, or following a hardware reset, the device reverts to sending commands to sector SA0.

Customer Lockable: Secured Silicon Sector NOT Programmed or Protected At the Factory

Unless otherwise specified, the device is shipped such that the customer may program and protect the 256-byte Secured Silicon sector.

The system may program the Secured Silicon Sector using the write-buffer, accelerated and/or unlock bypass methods, in addition to the standard programming command sequence. See Command Definitions.

Programming and protecting the Secured Silicon Sector must be used with caution since, once protected, there is no procedure available for unprotecting the Secured Silicon Sector area and none of the bits in the Secured Silicon Sector memory space can be modified in any way.

The Secured Silicon Sector area can be protected using one of the following procedures:

- Write the three-cycle Enter Secured Silicon Sector Region command sequence, and then follow the in-system sector protect algorithm as shown in Figure 2, except that *RESET# may be at either V_{IH} or V_{ID}*. This allows in-system protection of the Secured Silicon Sector without raising any device pin to a high voltage. Note that this method is only applicable to the Secured Silicon Sector.
- To verify the protect/unprotect status of the Secured Silicon Sector, follow the algorithm shown in Figure 3.

Once the Secured Silicon Sector is programmed, locked and verified, the system must write the Exit Secured Silicon Sector Region command sequence to return to reading and writing within the remainder of the array.

Factory Locked: Secured Silicon Sector Programmed and Protected At the Factory

In devices with an ESN, the Secured Silicon Sector is protected when the device is shipped from the factory. The Secured Silicon Sector cannot be modified in any way. An ESN Factory Locked device has an 16-byte random ESN at addresses 000000h–000007h. Please contact your local AMD sales representative for details on ordering ESN Factory Locked devices.

Customers may opt to have their code programmed by AMD through the AMD ExpressFlash service (Express Flash Factory Locked). The devices are then shipped from AMD's factory with the Secured Silicon Sector permanently locked. Contact an AMD representative for details on using AMD's ExpressFlash service.

查询"L320MH-UNI"供应商

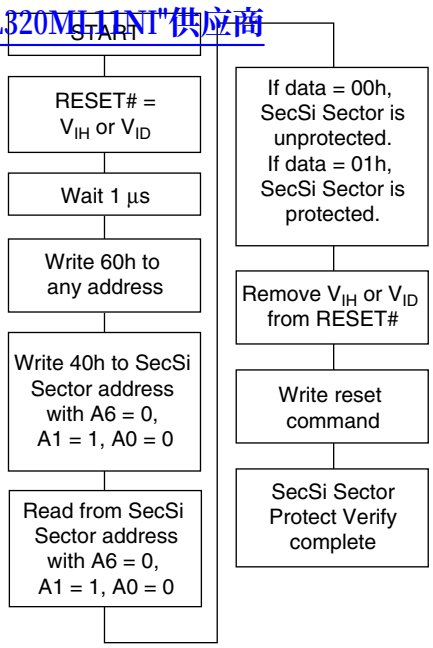

Figure 3. Secured Silicon Sector Protect Verify

Hardware Data Protection

The command sequence requirement of unlock cycles for programming or erasing provides data protection against inadvertent writes (refer to Tables 10 and 11 for command definitions). In addition, the following hardware data protection measures prevent accidental erasure or programming, which might otherwise be caused by spurious system level signals during V_{CC} power-up and power-down transitions, or from system noise.

Low V_{CC} Write Inhibit

When V_{CC} is less than V_{LKO}, the device does not accept any write cycles. This protects data during V_{CC} power-up and power-down. The command register and all internal program/erase circuits are disabled, and the device resets to the read mode. Subsequent writes are ignored until V_{CC} is greater than V_{LKO}. The system must provide the proper signals to the control pins to prevent unintentional writes when V_{CC} is greater than V_{LKO}.

Write Pulse "Glitch" Protection

Noise pulses of less than 5 ns (typical) on OE#, CE# or WE# do not initiate a write cycle.

Logical Inhibit

Write cycles are inhibited by holding any one of OE# = V_{IL}, CE# = V_{IH} or WE# = V_{IH}. To initiate a write cycle, CE# and WE# must be a logical zero while OE# is a logical one.

Power-Up Write Inhibit

If WE# = CE# = V_{IL} and OE# = V_{IH} during power up, the device does not accept commands on the rising edge of WE#. The internal state machine is automatically reset to the read mode on power-up.

COMMON FLASH MEMORY INTERFACE (CFI)

The Common Flash Interface (CFI) specification outlines device and host system software interrogation handshake, which allows specific vendor-specified software algorithms to be used for entire families of devices. Software support can then be device-independent, JEDEC ID-independent, and forward- and backward-compatible for the specified flash device families. Flash vendors can standardize their existing interfaces for long-term compatibility.

This device enters the CFI Query mode when the system writes the CFI Query command, 98h, to address 55h, any time the device is ready to read array data. The system can read CFI information at the addresses given in Tables 6–9. To terminate reading CFI data, the system must write the reset command.

The system can also write the CFI query command when the device is in the autoselect mode. The device enters the CFI query mode, and the system can read CFI data at the addresses given in Tables 6–9. The system must write the reset command to return the device to reading array data.

For further information, please refer to the CFI Specification and CFI Publication 100, available via the World Wide Web at http://www.amd.com/flash/cfi. Alternatively, contact an AMD representative for copies of these documents.

查询"L320ML11NI"供应商

Table 6. CFI Query Identification String

Addresses (x16)	Addresses (x8)	Data	Description
10h 11h 12h	20h 22h 24h	0051h 0052h 0059h	Query Unique ASCII string “QRY”
13h 14h	26h 28h	0002h 0000h	Primary OEM Command Set
15h 16h	2Ah 2Ch	0040h 0000h	Address for Primary Extended Table
17h 18h	2Eh 30h	0000h 0000h	Alternate OEM Command Set (00h = none exists)
19h 1Ah	32h 34h	0000h 0000h	Address for Alternate OEM Extended Table (00h = none exists)

Table 7. System Interface String

Addresses (x16)	Addresses (x8)	Data	Description
1Bh	36h	0027h	V_{CC} Min. (write/erase) D7–D4: volt, D3–D0: 100 millivolt
1Ch	38h	0036h	V_{CC} Max. (write/erase) D7–D4: volt, D3–D0: 100 millivolt
1Dh	3Ah	0000h	V_{PP} Min. voltage (00h = no V_{PP} pin present)
1Eh	3Ch	0000h	V_{PP} Max. voltage (00h = no V_{PP} pin present)
1Fh	3Eh	0007h	Typical timeout per single byte/word write 2^N µs
20h	40h	0007h	Typical timeout for Min. size buffer write 2^N µs (00h = not supported)
21h	42h	000Ah	Typical timeout per individual block erase 2^N ms
22h	44h	0000h	Typical timeout for full chip erase 2^N ms (00h = not supported)
23h	46h	0001h	Max. timeout for byte/word write 2^N times typical
24h	48h	0005h	Max. timeout for buffer write 2^N times typical
25h	4Ah	0004h	Max. timeout per individual block erase 2^N times typical
26h	4Ch	0000h	Max. timeout for full chip erase 2^N times typical (00h = not supported)

Table 8. Device Geometry Definition

查询"L320MLLINI"供应商

Addresses (x16)	Addresses (x8)	Data	Description
27h	4Eh	0016h	Device Size = 2^N byte
28h 29h	50h 52h	0002h 0000h	Flash Device Interface description (refer to CFI publication 100)
2Ah 2Bh	54h 56h	0005h 0000h	Max. number of byte in multi-byte write = 2^N (00h = not supported)
2Ch	58h	0001h	Number of Erase Block Regions within device (01h = uniform device, 02h = boot device)
2Dh 2Eh 2Fh 30h	5Ah 5Ch 5Eh 60h	003Fh 0000h 0000h 0001h	Erase Block Region 1 Information (refer to the CFI specification or CFI publication 100)
31h 32h 33h 34h	62h 64h 66h 68h	0000h 0000h 0000h 0000h	Erase Block Region 2 Information (refer to CFI publication 100)
35h 36h 37h 38h	6Ah 6Ch 6Eh 70h	0000h 0000h 0000h 0000h	Erase Block Region 3 Information (refer to CFI publication 100)
39h 3Ah 3Bh 3Ch	72h 74h 76h 78h	0000h 0000h 0000h 0000h	Erase Block Region 4 Information (refer to CFI publication 100)

Table 9. Primary Vendor-Specific Extended Query

查询"L320ML11NI"供应商

Addresses (x16)	Addresses (x8)	Data	Description
40h 41h 42h	80h 82h 84h	0050h 0052h 0049h	Query-unique ASCII string “PRI”
43h	86h	0031h	Major version number, ASCII
44h	88h	0033h	Minor version number, ASCII
45h	8Ah	0008h	Address Sensitive Unlock (Bits 1-0) 0 = Required, 1 = Not Required Process Technology (Bits 7-2) 0010b = 0.23 µm MirrorBit
46h	8Ch	0002h	Erase Suspend 0 = Not Supported, 1 = To Read Only, 2 = To Read & Write
47h	8Eh	0001h	Sector Protect 0 = Not Supported, X = Number of sectors in per group
48h	90h	0001h	Sector Temporary Unprotect 00 = Not Supported, 01 = Supported
49h	92h	0004h	Sector Protect/Unprotect scheme 04 = 29LV800 mode
4Ah	94h	0000h	Simultaneous Operation 00 = Not Supported, X = Number of Sectors in Bank
4Bh	96h	0000h	Burst Mode Type 00 = Not Supported, 01 = Supported
4Ch	98h	0001h	Page Mode Type 00 = Not Supported, 01 = 4 Word/8 Byte Page, 02 = 8 Word/16 Byte Page
4Dh	9Ah	00B5h	ACC (Acceleration) Supply Minimum 00h = Not Supported, D7-D4: Volt, D3-D0: 100 mV
4Eh	9Ch	00C5h	ACC (Acceleration) Supply Maximum 00h = Not Supported, D7-D4: Volt, D3-D0: 100 mV
4Fh	9Eh	0004h/ 0005h	Top/Bottom Boot Sector Flag 00h = Uniform Device without WP# protect, 02h = Bottom Boot Device, 03h = Top Boot Device, 04h = Uniform sectors bottom WP# protect, 05h = Uniform sectors top WP# protect
50h	A0h	0001h	Program Suspend 00h = Not Supported, 01h = Supported

COMMAND DEFINITIONS

查询"L320ML11NI"供应商

Writing specific address and data commands or sequences into the command register initiates device operations. Tables 10 and 11 define the valid register command sequences. *Writing incorrect address and data values or writing them in the improper sequence may place the device in an unknown state. A reset command is then required to return the device to reading array data.*

All addresses are latched on the falling edge of WE# or CE#, whichever happens later. All data is latched on the rising edge of WE# or CE#, whichever happens first. Refer to the AC Characteristics section for timing diagrams.

Reading Array Data

The device is automatically set to reading array data after device power-up. No commands are required to retrieve data. The device is ready to read array data after completing an Embedded Program or Embedded Erase algorithm.

After the device accepts an Erase Suspend command, the device enters the erase-suspend-read mode, after which the system can read data from any non-erase-suspended sector. After completing a programming operation in the Erase Suspend mode, the system may once again read array data with the same exception. See the Erase Suspend/Erase Resume Commands section for more information.

The system *must* issue the reset command to return the device to the read (or erase-suspend-read) mode if DQ5 goes high during an active program or erase operation, or if the device is in the autoselect mode. See the next section, Reset Command, for more information.

See also Requirements for Reading Array Data in the Device Bus Operations section for more information. The Read-Only Operations table provides the read parameters, and Figure 13 shows the timing diagram.

Reset Command

Writing the reset command resets the device to the read or erase-suspend-read mode. Address bits are don't cares for this command.

The reset command may be written between the sequence cycles in an erase command sequence before erasing begins. This resets the device to the read mode. Once erasure begins, however, the device ignores reset commands until the operation is complete.

The reset command may be written between the sequence cycles in a program command sequence before programming begins. This resets the device to the read mode. If the program command sequence is written while the device is in the Erase Suspend mode, writing the reset command returns the device to the erase-suspend-read mode. Once programming begins, however, the device ignores reset commands until the operation is complete.

The reset command may be written between the sequence cycles in an autoselect command sequence. Once in the autoselect mode, the reset command must be written to return to the read mode. If the device entered the autoselect mode while in the Erase Suspend mode, writing the reset command returns the device to the erase-suspend-read mode.

If DQ5 goes high during a program or erase operation, writing the reset command returns the device to the read mode (or erase-suspend-read mode if the device was in Erase Suspend).

Note that if DQ1 goes high during a Write Buffer Programming operation, the system must write the Write-to-Buffer-Abort Reset command sequence to reset the device for the next operation.

Autoselect Command Sequence

The autoselect command sequence allows the host system to read several identifier codes at specific addresses:

Identifier Code	A7:A0 (x16)	A6:A-1 (x8)
Manufacturer ID	00h	00h
Device ID, Cycle 1	01h	02h
Device ID, Cycle 2	0Eh	1Ch
Device ID, Cycle 3	0Fh	1Eh
Secured Silicon Sector Factory Protect	03h	06h
Sector Protect Verify	(SA)02h	(SA)04h

Note: *The device ID is read over three cycles. SA = Sector Address*

Tables 10 and 11 show the address requirements and codes. This method is an alternative to that shown in Table 3, which is intended for PROM programmers and requires V_{ID} on address pin A9. The autoselect command sequence may be written to an address that is either in the read or erase-suspend-read mode. The autoselect command may not be written while the device is actively programming or erasing.

The autoselect command sequence is initiated by first writing two unlock cycles. This is followed by a third write cycle that contains the autoselect command. The device then enters the autoselect mode. The system may read at any address any number of times without initiating another autoselect command sequence:

The system must write the reset command to return to the read mode (or erase-suspend-read mode if the device was previously in Erase Suspend).

Enter Secured Silicon Sector/Exit Secured Silicon Sector Command Sequence

查询"Am29LV320MH/L"供应商

The Secured Silicon Sector region provides a secured data area containing an 8-word/16-byte random Electronic Serial Number (ESN). The system can access the Secured Silicon Sector region by issuing the three-cycle Enter Secured Silicon Sector command sequence. The device continues to access the Secured Silicon Sector region until the system issues the four-cycle Exit Secured Silicon Sector command sequence. The Exit Secured Silicon Sector command sequence returns the device to normal operation. Tables 10 and 11 show the address and data requirements for both command sequences. See also "Secured Silicon Sector Flash Memory Region" for further information. *Note that the ACC function and unlock bypass modes are not available when the Secured Silicon Sector is enabled.*

Word/Byte Program Command Sequence

Programming is a four-bus-cycle operation. The program command sequence is initiated by writing two unlock write cycles, followed by the program set-up command. The program address and data are written next, which in turn initiate the Embedded Program algorithm. The system is *not* required to provide further controls or timings. The device automatically provides internally generated program pulses and verifies the programmed cell margin. Tables 10 and 11 show the address and data requirements for the word/byte program command sequence, respectively. *Note that the Secured Silicon Sector, autoselect, and CFI functions are unavailable when a program operation is in progress.*

When the Embedded Program algorithm is complete, the device then returns to the read mode and addresses are no longer latched. The system can determine the status of the program operation by using DQ7 or DQ6. Refer to the Write Operation Status section for information on these status bits.

Any commands written to the device during the Embedded Program Algorithm are ignored. Note that a **hardware reset** immediately terminates the program operation. The program command sequence should be reinitiated once the device has returned to the read mode, to ensure data integrity.

Programming is allowed in any sequence and across sector boundaries. **A bit cannot be programmed from "0" back to a "1."** Attempting to do so may cause the device to set DQ5 = 1, or cause the DQ7 and DQ6 status bits to indicate the operation was successful. However, a succeeding read will show that the data is still "0." Only erase operations can convert a "0" to a "1."

Unlock Bypass Command Sequence

The unlock bypass feature allows the system to program words to the device faster than using the standard program command sequence. The unlock bypass command sequence is initiated by first writing two unlock cycles. This is followed by a third write cycle containing the unlock bypass command, 20h. The device then enters the unlock bypass mode. A two-cycle unlock bypass program command sequence is all that is required to program in this mode. The first cycle in this sequence contains the unlock bypass program command, A0h; the second cycle contains the program address and data. Additional data is programmed in the same manner. This mode dispenses with the initial two unlock cycles required in the standard program command sequence, resulting in faster total programming time. Tables 10 and 11 show the requirements for the command sequence.

During the unlock bypass mode, only the Unlock Bypass Program and Unlock Bypass Reset commands are valid. To exit the unlock bypass mode, the system must issue the two-cycle unlock bypass reset command sequence. The first cycle must contain the data 90h. The second cycle must contain the data 00h. The device then returns to the read mode.

Write Buffer Programming

Write Buffer Programming allows the system write to a maximum of 16 words/32 bytes in one programming operation. This results in faster effective programming time than the standard programming algorithms. The Write Buffer Programming command sequence is initiated by first writing two unlock cycles. This is followed by a third write cycle containing the Write Buffer Load command written at the Sector Address in which programming will occur. The fourth cycle writes the sector address and the number of word locations, minus one, to be programmed. For example, if the system will program 6 unique address locations, then 05h should be written to the device. This tells the device how many write buffer addresses will be loaded with data and therefore when to expect the Program Buffer to Flash command. The number of locations to program cannot exceed the size of the write buffer or the operation will abort.

The fifth cycle writes the first address location and data to be programmed. The write-buffer-page is selected by address bits A_{MAX}–A_4. All subsequent address/data pairs must fall within the selected-write-buffer-page. The system then writes the remaining address/data pairs into the write buffer. Write buffer locations may be loaded in any order.

The write-buffer-page address must be the same for all address/data pairs loaded into the write buffer. (This means Write Buffer Programming cannot be performed across multiple write-buffer pages. This also

means that Write Buffer Programming cannot be performed across multiple sectors. If the system attempts to load programming data outside of the selected write-buffer page, the operation will abort.

查询"Am29LV320MH/L"供应商

Note that if a Write Buffer address location is loaded multiple times, the address/data pair counter will be decremented for every data load operation. The host system must therefore account for loading a write-buffer location more than once. The counter decrements for each data load operation, not for each unique write-buffer-address location. Note also that if an address location is loaded more than once into the buffer, the final data loaded for that address will be programmed.

Once the specified number of write buffer locations have been loaded, the system must then write the Program Buffer to Flash command at the sector address. Any other address and data combination aborts the Write Buffer Programming operation. The device then begins programming. Data polling should be used while monitoring the last address location loaded into the write buffer. DQ7, DQ6, DQ5, and DQ1 should be monitored to determine the device status during Write Buffer Programming.

The write-buffer programming operation can be suspended using the standard program suspend/resume commands. Upon successful completion of the Write Buffer Programming operation, the device is ready to execute the next command.

The Write Buffer Programming Sequence can be aborted in the following ways:

- Load a value that is greater than the page buffer size during the Number of Locations to Program step.
- Write to an address in a sector different than the one specified during the Write-Buffer-Load command.
- Write an Address/Data pair to a different write-buffer-page than the one selected by the Starting Address during the write buffer data loading stage of the operation.
- Write data other than the Confirm Command after the specified number of data load cycles.

The abort condition is indicated by DQ1 = 1, DQ7 = DATA# (for the last address location loaded), DQ6 = toggle, and DQ5=0. A Write-to-Buffer-Abort Reset command sequence must be written to reset the device for the next operation. Note that the full 3-cycle Write-to-Buffer-Abort Reset command sequence is required when using Write-Buffer-Programming features in Unlock Bypass mode.

Accelerated Program

The device offers accelerated program operations through the WP#/ACC pin. When the system asserts V_{HH} on the WP#/ACC pin, the device automatically enters the Unlock Bypass mode. The system may then write the two-cycle Unlock Bypass program command sequence. The device uses the higher voltage on the WP#/ACC pin to accelerate the operation. *Note that the* WP#/*ACC pin must not be at V_{HH} for operations other than accelerated programming, or device damage may result. In addition, no external pullup is necessary since the WP#/ACC pin has internal pullup to V_{CC}.*

Figure 5 illustrates the algorithm for the program operation. Refer to the Erase and Program Operations table in the AC Characteristics section for parameters, and Figure 17 for timing diagrams.

查询"L320ML11NI"供应商

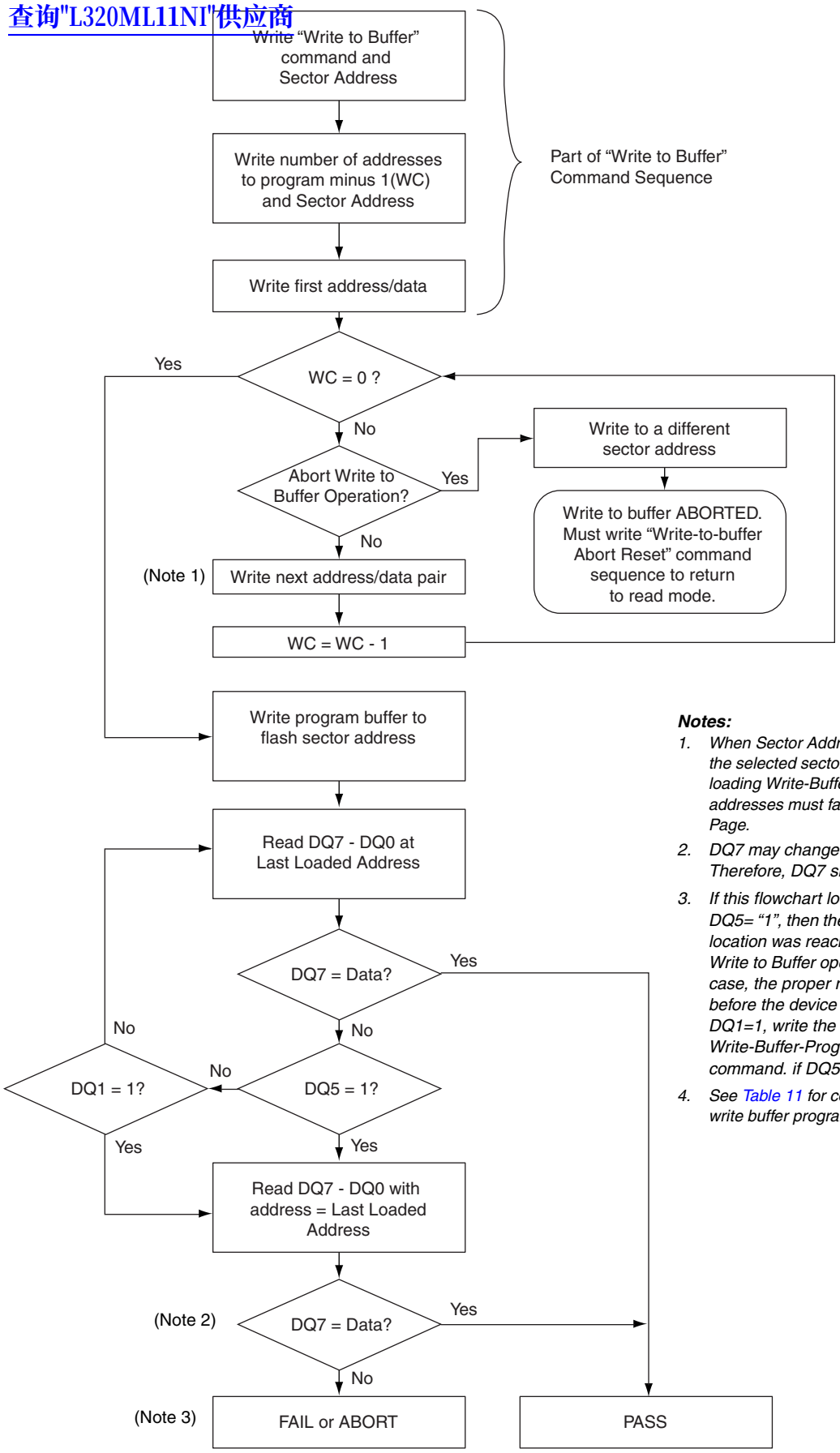

Notes:

1. *When Sector Address is specified, any address in the selected sector is acceptable. However, when loading Write-Buffer address locations with data, all addresses must fall within the selected Write-Buffer Page.*
2. *DQ7 may change simultaneously with DQ5. Therefore, DQ7 should be verified.*
3. *If this flowchart location was reached because DQ5= "1", then the device FAILED. If this flowchart location was reached because DQ1= "1", then the Write to Buffer operation was ABORTED. In either case, the proper reset command must be written before the device can begin another operation. If DQ1=1, write the Write-Buffer-Programming-Abort-Reset command. if DQ5=1, write the Reset command.*
4. *See Table 11 for command sequences required for write buffer programming.*

Figure 4. Write Buffer Programming Operation

查询"L320ML11NI"供应商

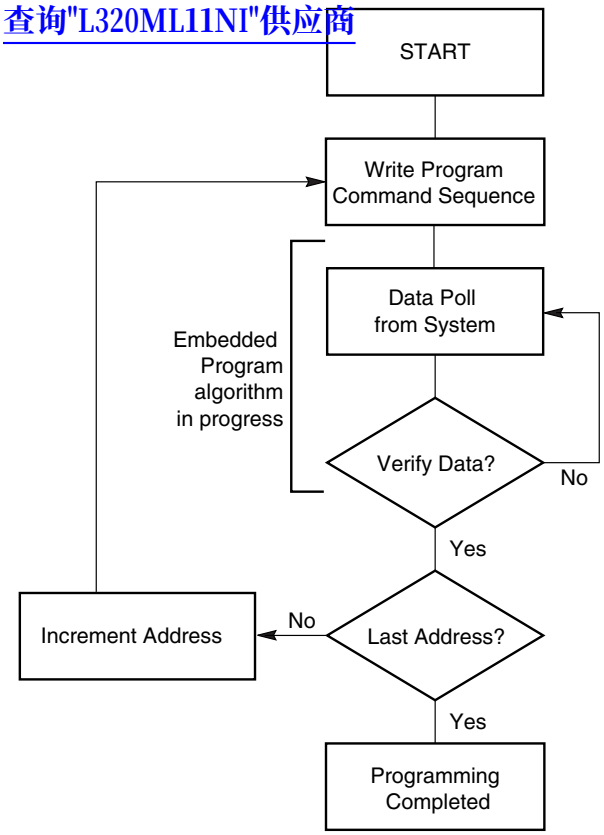

Note: *See Tables 10 and 11 for program command sequence.*

Figure 5. Program Operation

Program Suspend/Program Resume Command Sequence

The Program Suspend command allows the system to interrupt a programming operation or a Write to Buffer programming operation so that data can be read from any non-suspended sector. When the Program Suspend command is written during a programming process, the device halts the program operation within 15 µs (maximum) 5µs typical and updates the status bits. Addresses are not required when writing the Program Suspend command.

After the programming operation has been suspended, the system can read array data from any non-suspended sector. The Program Suspend command may also be issued during a programming operation while an erase is suspended. In this case, data may be read from any addresses not in Erase Suspend or Program Suspend. If a read is needed from the Secured Silicon Sector area (One-time Program area), then user must use the proper command sequences to enter and exit this region.

The system may also write the autoselect command sequence when the device is in the Program Suspend mode. The system can read as many autoselect codes as required. When the device exits the autoselect mode, the device reverts to the Program Suspend mode, and is ready for another valid operation. See Autoselect Command Sequence for more information.

After the Program Resume command is written, the device reverts to programming. The system can determine the status of the program operation using the DQ7 or DQ6 status bits, just as in the standard program operation. See Write Operation Status for more information.

The system must write the Program Resume command (address bits are don't care) to exit the Program Suspend mode and continue the programming operation. Further writes of the Resume command are ignored. Another Program Suspend command can be written after the device has resume programming.

查询"L320ML11NI"供应商

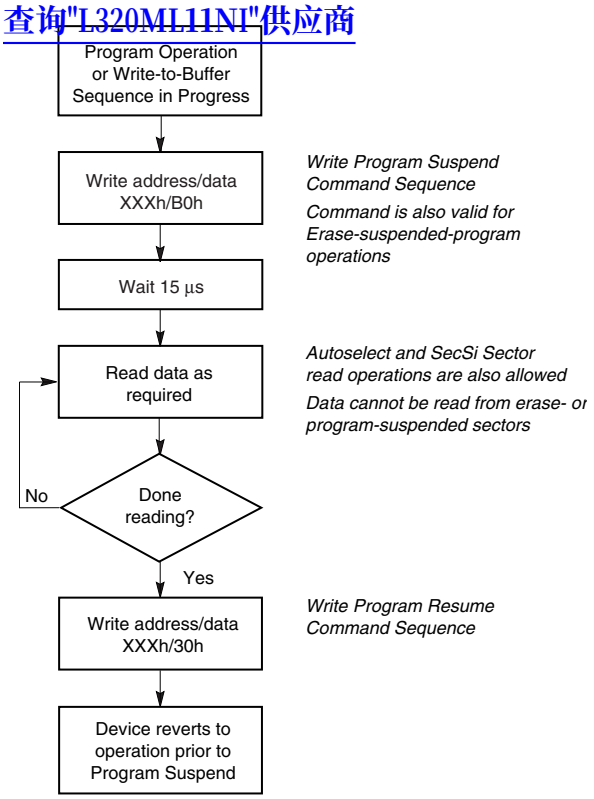

Figure 6. Program Suspend/Program Resume

Chip Erase Command Sequence

Chip erase is a six bus cycle operation. The chip erase command sequence is initiated by writing two unlock cycles, followed by a set-up command. Two additional unlock write cycles are then followed by the chip erase command, which in turn invokes the Embedded Erase algorithm. The device does *not* require the system to preprogram prior to erase. The Embedded Erase algorithm automatically preprograms and verifies the entire memory for an all zero data pattern prior to electrical erase. The system is not required to provide any controls or timings during these operations. Tables 10 and 11 show the address and data requirements for the chip erase command sequence. *Note that the Secured Silicon Sector, autoselect, and CFI functions are unavailable when a erase operation is in progress.*

When the Embedded Erase algorithm is complete, the device returns to the read mode and addresses are no longer latched. The system can determine the status of the erase operation by using DQ7, DQ6, or DQ2. Refer to the Write Operation Status section for information on these status bits.

Any commands written during the chip erase operation are ignored. However, note that a **hardware reset** immediately terminates the erase operation. If that occurs, the chip erase command sequence should be reinitiated once the device has returned to reading array data, to ensure data integrity.

Figure 7 illustrates the algorithm for the erase operation. Refer to the Erase and Program Operations tables in the AC Characteristics section for parameters, and Figure 19 section for timing diagrams.

Sector Erase Command Sequence

Sector erase is a six bus cycle operation. The sector erase command sequence is initiated by writing two unlock cycles, followed by a set-up command. Two additional unlock cycles are written, and are then followed by the address of the sector to be erased, and the sector erase command. Tables 10 and 11 show the address and data requirements for the sector erase command sequence. *Note that the Secured Silicon Sector, autoselect, and CFI functions are unavailable when a erase operation is in progress.*

The device does *not* require the system to preprogram prior to erase. The Embedded Erase algorithm automatically programs and verifies the entire memory for an all zero data pattern prior to electrical erase. The system is not required to provide any controls or timings during these operations.

After the command sequence is written, a sector erase time-out of 50 µs occurs. During the time-out period, additional sector addresses and sector erase commands may be written. Loading the sector erase buffer may be done in any sequence, and the number of sectors may be from one sector to all sectors. The time between these additional cycles must be less than 50 µs, otherwise erasure may begin. Any sector erase address and command following the exceeded time-out may or may not be accepted. It is recommended that processor interrupts be disabled during this time to ensure all commands are accepted. The interrupts can be re-enabled after the last Sector Erase command is written. **Any command other than Sector Erase or Erase Suspend during the time-out period resets the device to the read mode.** The system must rewrite the command sequence and any additional addresses and commands.

查询"Am29LV320MH/L"供应商

The system can monitor DQ3 to determine if the sector erase timer has timed out (See the section on DQ3: Sector Erase Timer.). The time-out begins from the rising edge of the final WE# pulse in the command sequence.

When the Embedded Erase algorithm is complete, the device returns to reading array data and addresses are no longer latched. The system can determine the status of the erase operation by reading DQ7, DQ6, or DQ2 in the erasing sector. Refer to the Write Operation Status section for information on these status bits.

Once the sector erase operation has begun, only the Erase Suspend command is valid. All other commands are ignored. However, note that a **hardware reset** immediately terminates the erase operation. If that occurs, the sector erase command sequence should be reinitiated once the device has returned to reading array data, to ensure data integrity.

Figure 7 illustrates the algorithm for the erase operation. Refer to the Erase and Program Operations tables in the AC Characteristics section for parameters, and Figure 19 section for timing diagrams.

Erase Suspend/Erase Resume Commands

The Erase Suspend command, B0h, allows the system to interrupt a sector erase operation and then read data from, or program data to, any sector not selected for erasure. This command is valid only during the sector erase operation, including the 50 µs time-out period during the sector erase command sequence. The Erase Suspend command is ignored if written during the chip erase operation or Embedded Program algorithm.

When the Erase Suspend command is written during the sector erase operation, the device requires a typical of 5 µs (maximum of 20 µs) to suspend the erase operation. However, when the Erase Suspend command is written during the sector erase time-out, the device immediately terminates the time-out period and suspends the erase operation.

After the erase operation has been suspended, the device enters the erase-suspend-read mode. The system can read data from or program data to any sector not selected for erasure. (The device "erase suspends" all sectors selected for erasure.) Reading at any address within erase-suspended sectors produces status information on DQ7–DQ0. The system can use DQ7, or DQ6 and DQ2 together, to determine if a sector is actively erasing or is erase-suspended. Refer to the Write Operation Status section for information on these status bits.

After an erase-suspended program operation is complete, the device returns to the erase-suspend-read mode. The system can determine the status of the program operation using the DQ7 or DQ6 status bits, just as in the standard word program operation. Refer to the Write Operation Status section for more information.

In the erase-suspend-read mode, the system can also issue the autoselect command sequence. Refer to the Autoselect Mode and Autoselect Command Sequence sections for details.

To resume the sector erase operation, the system must write the Erase Resume command. Further writes of the Resume command are ignored. Another Erase Suspend command can be written after the chip has resumed erasing.

Note: During an erase operation, this flash device performs multiple internal operations which are invisible to the system. When an erase operation is suspended, any of the internal operations that were not fully completed must be restarted. As such, if this flash device is continually issued suspend/resume commands in rapid succession, erase progress will be impeded as a function of the number of suspends. The result will be a longer cumulative erase time than without suspends. Note that the additional suspends do not affect device reliability or future performance. In most systems rapid erase/suspend activity occurs only briefly. In such cases, erase performance will not be significantly impacted.

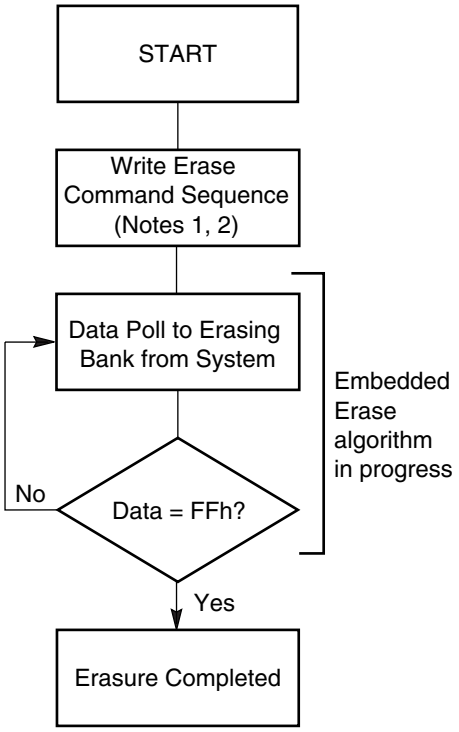

Notes:

1. *See Tables 10 and 11 for erase command sequence.*
2. *See the section on DQ3 for information on the sector erase timer.*

Figure 7. Erase Operation

Command Definitions

查询"L320ML11NI"供应商

Table 10. Command Definitions (x16 Mode, BYTE# = V_{IH})

Command Sequence (Note 1)		Cycles	Bus Cycles (Notes 2–5)											
			First		Second		Third		Fourth		Fifth		Sixth	
			Addr	Data	Addr	Data	Addr	Data	Addr	Data	Addr	Data	Addr	Data
Read (Note 5)		1	RA	RD										
Reset (Note 6)		1	XXX	F0										
Autoselect (Note 7)	Manufacturer ID	4	555	AA	2AA	55	555	90	X00	0001				
	Device ID (Note 8)	6	555	AA	2AA	55	555	90	X01	227E	X0E	**XX1D**	X0F	**XX00**
	Secured Silicon Sector Factory Protect (Note 9)	4	555	AA	2AA	55	555	90	X03	(Note 9)				
	Sector Group Protect Verify (Note 10)	4	555	AA	2AA	55	555	90	(SA)X02	00/01				
Enter Secured Silicon Sector Region		3	555	AA	2AA	55	555	88						
Exit Secured Silicon Sector Region		4	555	AA	2AA	55	555	90	XXX	00				
Program		4	555	AA	2AA	55	555	A0	PA	PD				
Write to Buffer (Note 11)		6	555	AA	2AA	55	SA	25	SA	WC	PA	PD	WBL	PD
Program Buffer to Flash		1	SA	29										
Write to Buffer Abort Reset (Note 12)		3	555	AA	2AA	55	555	F0						
Unlock Bypass		3	555	AA	2AA	55	555	20						
Unlock Bypass Program (Note 13)		2	XXX	A0	PA	PD								
Unlock Bypass Reset (Note 14)		2	XXX	90	XXX	00								
Chip Erase		6	555	AA	2AA	55	555	80	555	AA	2AA	55	555	10
Sector Erase		6	555	AA	2AA	55	555	80	555	AA	2AA	55	SA	30
Program/Erase Suspend (Note 15)		1	XXX	B0										
Program/Erase Resume (Note 16)		1	XXX	30										
CFI Query (Note 17)		1	55	98										

Legend:

X = Don't care

RA = Read Address of memory location to be read.

RD = Read Data read from location RA during read operation.

PA = Program Address. Addresses latch on falling edge of WE# or CE# pulse, whichever happens later.

PD = Program Data for location PA. Data latches on rising edge of WE# or CE# pulse, whichever happens first.

SA = Sector Address of sector to be verified (in autoselect mode) or erased. Address bits A20–A15 uniquely select any sector.

WBL = Write Buffer Location. Address must be within same write buffer page as PA.

WC = Word Count. Number of write buffer locations to load minus 1.

Notes:

1. *See Table 1 for description of bus operations.*
2. *All values are in hexadecimal.*
3. *Shaded cells indicate read cycles. All others are write cycles.*
4. *During unlock and command cycles, when lower address bits are 555 or 2AA as shown in table, address bits above A11 and data bits above DQ7 are don't care.*
5. *No unlock or command cycles required when device is in read mode.*
6. *Reset command is required to return to read mode (or to erase-suspend-read mode if previously in Erase Suspend) when device is in autoselect mode, or if DQ5 goes high while device is providing status information.*
7. *Fourth cycle of the autoselect command sequence is a read cycle. Data bits DQ15–DQ8 are don't care. Except for RD, PD, and WC. See Autoselect Command Sequence section for more information.*
8. *Device ID must be read in three cycles.*
9. *If WP# protects highest address sector, data is 98h for factory locked and 18h for not factory locked. If WP# protects lowest address sector, data is 88h for factory locked and 08h for not factor locked.*
10. *Data is 00h for an unprotected sector group and 01h for a protected sector group.*
11. *Total number of cycles in command sequence is determined by number of words written to write buffer. Maximum number of cycles in command sequence is 21.*
12. *Command sequence resets device for next command after aborted write-to-buffer operation.*
13. *Unlock Bypass command is required prior to Unlock Bypass Program command.*
14. *Unlock Bypass Reset command is required to return to read mode when device is in unlock bypass mode.*
15. *System may read and program in non-erasing sectors, or enter autoselect mode, when in Erase Suspend mode. Erase Suspend command is valid only during a sector erase operation.*
16. *Erase Resume command is valid only during Erase Suspend mode.*
17. *Command is valid when device is ready to read array data or when device is in autoselect mode.*

Table 11. Command Definitions (x8 Mode, BYTE# = V_{IL})

查询"L320ML11NI"供应商

Command Sequence (Note 1)		Cycles	Bus Cycles (Notes 2–5)											
			First		Second		Third		Fourth		Fifth		Sixth	
			Addr	Data	Addr	Data	Addr	Data	Addr	Data	Addr	Data	Addr	Data
Read (Note 6)		1	RA	RD										
Reset (Note 7)		1	XXX	F0										
Autoselect (Note 8)	Manufacturer ID	4	AAA	AA	555	55	AAA	90	X00	01				
	Device ID (Note 9)	6	AAA	AA	555	55	AAA	90	X02	7E	X1C	**1D**	X1E	**00**
	Secured Silicon Sector Factory Protect (Note 10)	4	AAA	AA	555	55	AAA	90	X06	(Note 10)				
	Sector Group Protect Verify (Note 11)	4	AAA	AA	555	55	AAA	90	(SA)X04	00/01				
Enter Secured Silicon Sector Region		3	AAA	AA	555	55	AAA	88						
Exit Secured Silicon Sector Region		4	AAA	AA	555	55	AAA	90	XXX	00				
Program		4	555	AA	2AA	55	555	A0	PA	PD				
Write to Buffer (Note 12)		6	AAA	AA	555	55	SA	25	SA	BC	PA	PD	WBL	PD
Program Buffer to Flash		1	SA	29										
Write to Buffer Abort Reset (Note 13)		3	AAA	AA	555	55	AAA	F0						
Unlock Bypass		3	AAA	AA	555	55	AAA	20						
Unlock Bypass Program (Note 13)		2	XXX	A0	PA	PD								
Unlock Bypass Reset (Note 15)		2	XXX	90	XXX	00								
Chip Erase		6	AAA	AA	555	55	AAA	80	AAA	AA	555	55	AAA	10
Sector Erase		6	AAA	AA	555	55	AAA	80	AAA	AA	555	55	SA	30
Program/Erase Suspend (Note 16)		1	XXX	B0										
Program/Erase Resume (Note 17)		1	XXX	30										
CFI Query (Note 18)		1	AA	98										

Legend:

X = Don't care

RA = Read Address of memory location to be read.

RD = Read Data read from location RA during read operation.

PA = Program Address. Addresses latch on falling edge of WE# or CE# pulse, whichever happens later.

PD = Program Data for location PA. Data latches on rising edge of WE# or CE# pulse, whichever happens first.

SA = Sector Address of sector to be verified (in autoselect mode) or erased. Address bits A20–A15 uniquely select any sector.

WBL = Write Buffer Location. Address must be within same write buffer page as PA.

BC = Byte Count. Number of write buffer locations to load minus 1.

Notes:

1. *See Table 1 for description of bus operations.*
2. *All values are in hexadecimal.*
3. *Shaded cells indicate read cycles. All others are write cycles.*
4. *During unlock and command cycles, when lower address bits are 555 or AAA as shown in table, address bits above A11 are don't care.*
5. *Unless otherwise noted, address bits A20–A11 are don't cares.*
6. *No unlock or command cycles required when device is in read mode.*
7. *Reset command is required to return to read mode (or to erase-suspend-read mode if previously in Erase Suspend) when device is in autoselect mode, or if DQ5 goes high while device is providing status information.*
8. *Fourth cycle of autoselect command sequence is a read cycle. Data bits DQ15–DQ8 are don't care. See Autoselect Command Sequence section or more information.*
9. *Device ID must be read in three cycles.*
10. *If WP# protects highest address sector, data is 98h for factory locked and 18h for not factory locked. If WP# protects lowest address sector, data is 88h for factory locked and 08h for not factor locked.*
11. *Data is 00h for an unprotected sector group and 01h for a protected sector group.*
12. *Total number of cycles in command sequence is determined by number of words written to write buffer. Maximum number of cycles in command sequence is 21.*
13. *Command sequence resets device for next command after aborted write-to-buffer operation.*
14. *Unlock Bypass command is required prior to Unlock Bypass Program command.*
15. *Unlock Bypass Reset command is required to return to read mode when device is in unlock bypass mode.*
16. *System may read and program in non-erasing sectors, or enter autoselect mode, when in Erase Suspend mode. Erase Suspend command is valid only during a sector erase operation.*
17. *Erase Resume command is valid only during Erase Suspend mode.*
18. *Command is valid when device is ready to read array data or when device is in autoselect mode.*

WRITE OPERATION STATUS

查询"L320ML11NI"供应商

The device provides several bits to determine the status of a program or erase operation: DQ2, DQ3, DQ5, DQ6, and DQ7. Table 12 and the following subsections describe the function of these bits. DQ7 and DQ6 each offer a method for determining whether a program or erase operation is complete or in progress. The device also provides a hardware-based output signal, RY/BY#, to determine whether an Embedded Program or Erase operation is in progress or has been completed.

DQ7: Data# Polling

The Data# Polling bit, DQ7, indicates to the host system whether an Embedded Program or Erase algorithm is in progress or completed, or whether the device is in Erase Suspend. Data# Polling is valid after the rising edge of the final WE# pulse in the command sequence.

During the Embedded Program algorithm, the device outputs on DQ7 the complement of the datum programmed to DQ7. This DQ7 status also applies to programming during Erase Suspend. When the Embedded Program algorithm is complete, the device outputs the datum programmed to DQ7. The system must provide the program address to read valid status information on DQ7. If a program address falls within a protected sector, Data# Polling on DQ7 is active for approximately 1 µs, then the device returns to the read mode.

During the Embedded Erase algorithm, Data# Polling produces a “0” on DQ7. When the Embedded Erase algorithm is complete, or if the device enters the Erase Suspend mode, Data# Polling produces a “1” on DQ7. The system must provide an address within any of the sectors selected for erasure to read valid status information on DQ7.

After an erase command sequence is written, if all sectors selected for erasing are protected, Data# Polling on DQ7 is active for approximately 100 µs, then the device returns to the read mode. If not all selected sectors are protected, the Embedded Erase algorithm erases the unprotected sectors, and ignores the selected sectors that are protected. However, if the system reads DQ7 at an address within a protected sector, the status may not be valid.

Just prior to the completion of an Embedded Program or Erase operation, DQ7 may change asynchronously with DQ0–DQ6 while Output Enable (OE#) is asserted low. That is, the device may change from providing status information to valid data on DQ7. Depending on when the system samples the DQ7 output, it may read the status or valid data. Even if the device has completed the program or erase operation and DQ7 has valid data, the data outputs on DQ0–DQ6 may be still invalid. Valid data on DQ0–DQ7 will appear on successive read cycles.

Table 12 shows the outputs for Data# Polling on DQ7. Figure 8 shows the Data# Polling algorithm. Figure 20 in the AC Characteristics section shows the Data# Polling timing diagram.

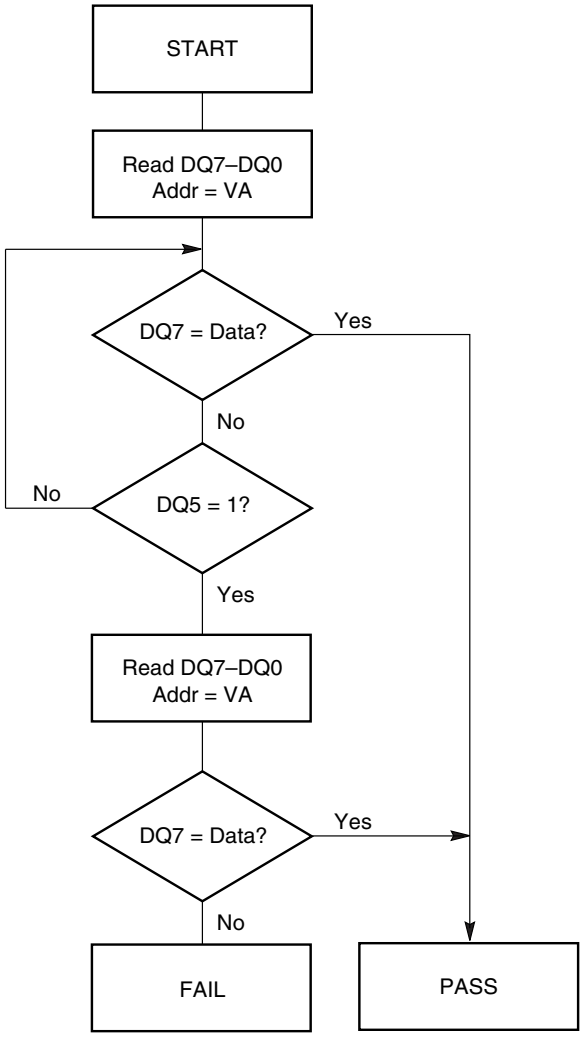

Notes:

1. *VA = Valid address for programming. During a sector erase operation, a valid address is any sector address within the sector being erased. During chip erase, a valid address is any non-protected sector address.*
2. *DQ7 should be rechecked even if DQ5 = “1” because DQ7 may change simultaneously with DQ5.*

Figure 8. Data# Polling Algorithm

RY/BY#: Ready/Busy#

查询"L320ML11NI"供应商

The RY/BY# is a dedicated, open-drain output pin which indicates whether an Embedded Algorithm is in progress or complete. The RY/BY# status is valid after the rising edge of the final WE# pulse in the command sequence. Since RY/BY# is an open-drain output, several RY/BY# pins can be tied together in parallel with a pull-up resistor to V_{CC}.

If the output is low (Busy), the device is actively erasing or programming. (This includes programming in the Erase Suspend mode.) If the output is high (Ready), the device is in the read mode, the standby mode, or in the erase-suspend-read mode. Table 12 shows the outputs for RY/BY#.

DQ6: Toggle Bit I

Toggle Bit I on DQ6 indicates whether an Embedded Program or Erase algorithm is in progress or complete, or whether the device has entered the Erase Suspend mode. Toggle Bit I may be read at any address, and is valid after the rising edge of the final WE# pulse in the command sequence (prior to the program or erase operation), and during the sector erase time-out.

During an Embedded Program or Erase algorithm operation, successive read cycles to any address cause DQ6 to toggle. The system may use either OE# or CE# to control the read cycles. When the operation is complete, DQ6 stops toggling.

After an erase command sequence is written, if all sectors selected for erasing are protected, DQ6 toggles for approximately 100 µs, then returns to reading array data. If not all selected sectors are protected, the Embedded Erase algorithm erases the unprotected sectors, and ignores the selected sectors that are protected.

The system can use DQ6 and DQ2 together to determine whether a sector is actively erasing or is erase-suspended. When the device is actively erasing (that is, the Embedded Erase algorithm is in progress), DQ6 toggles. When the device enters the Erase Suspend mode, DQ6 stops toggling. However, the system must also use DQ2 to determine which sectors are erasing or erase-suspended. Alternatively, the system can use DQ7 (see the subsection on DQ7: Data# Polling).

If a program address falls within a protected sector, DQ6 toggles for approximately 1 µs after the program command sequence is written, then returns to reading array data.

DQ6 also toggles during the erase-suspend-program mode, and stops toggling once the Embedded Program algorithm is complete.

Table 12 shows the outputs for Toggle Bit I on DQ6. Figure 9 shows the toggle bit algorithm. Figure 21 in the "AC Characteristics" section shows the toggle bit timing diagrams. Figure 22 shows the differences between DQ2 and DQ6 in graphical form. See also the subsection on DQ2: Toggle Bit II.

查询"L320MLHNI"供应商

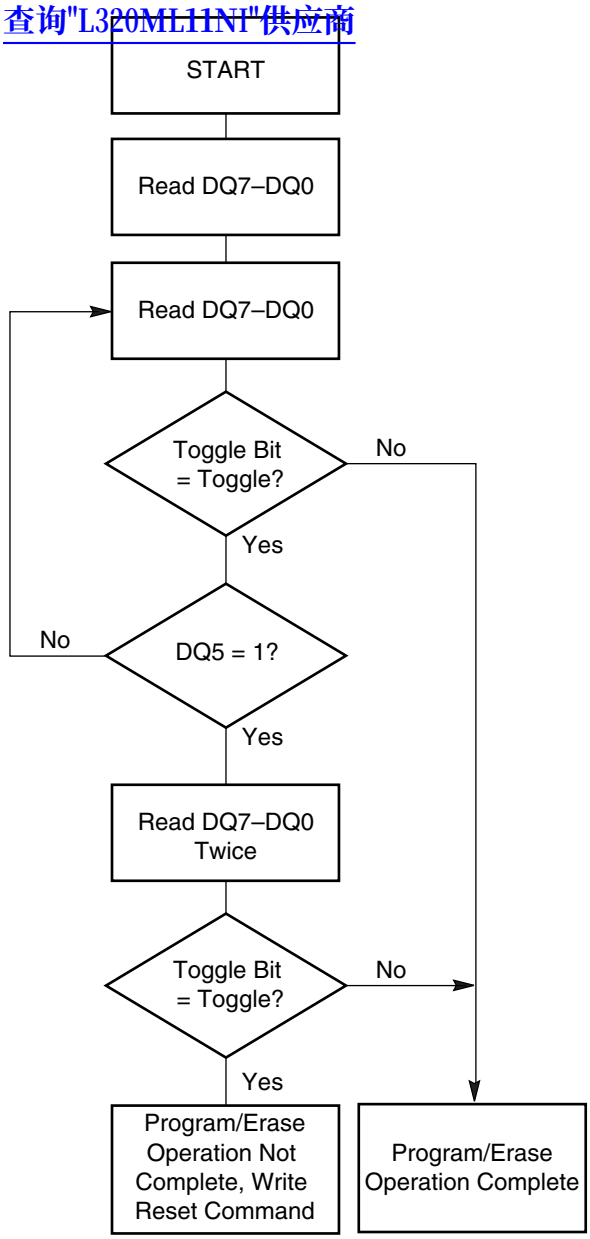

Note: *The system should recheck the toggle bit even if DQ5 = "1" because the toggle bit may stop toggling as DQ5 changes to "1." See the subsections on DQ6 and DQ2 for more information.*

Figure 9. Toggle Bit Algorithm

DQ2: Toggle Bit II

The "Toggle Bit II" on DQ2, when used with DQ6, indicates whether a particular sector is actively erasing (that is, the Embedded Erase algorithm is in progress), or whether that sector is erase-suspended. Toggle Bit II is valid after the rising edge of the final WE# pulse in the command sequence.

DQ2 toggles when the system reads at addresses within those sectors that have been selected for erasure. (The system may use either OE# or CE# to control the read cycles.) But DQ2 cannot distinguish whether the sector is actively erasing or is erase-suspended. DQ6, by comparison, indicates whether the device is actively erasing, or is in Erase Suspend, but cannot distinguish which sectors are selected for erasure. Thus, both status bits are required for sector and mode information. Refer to Table 12 to compare outputs for DQ2 and DQ6.

Figure 9 shows the toggle bit algorithm in flowchart form, and the section "DQ2: Toggle Bit II" explains the algorithm. See also the RY/BY#: Ready/Busy# subsection. Figure 21 shows the toggle bit timing diagram. Figure 22 shows the differences between DQ2 and DQ6 in graphical form.

Reading Toggle Bits DQ6/DQ2

Refer to Figure 9 for the following discussion. Whenever the system initially begins reading toggle bit status, it must read DQ7–DQ0 at least twice in a row to determine whether a toggle bit is toggling. Typically, the system would note and store the value of the toggle bit after the first read. After the second read, the system would compare the new value of the toggle bit with the first. If the toggle bit is not toggling, the device has completed the program or erase operation. The system can read array data on DQ7–DQ0 on the following read cycle.

However, if after the initial two read cycles, the system determines that the toggle bit is still toggling, the system also should note whether the value of DQ5 is high (see the section on DQ5). If it is, the system should then determine again whether the toggle bit is toggling, since the toggle bit may have stopped toggling just as DQ5 went high. If the toggle bit is no longer toggling, the device has successfully completed the program or erase operation. If it is still toggling, the device did not completed the operation successfully, and the system must write the reset command to return to reading array data.

The remaining scenario is that the system initially determines that the toggle bit is toggling and DQ5 has not gone high. The system may continue to monitor the toggle bit and DQ5 through successive read cycles, determining the status as described in the previous paragraph. Alternatively, it may choose to perform

other system tasks. In this case, the system must start at the beginning of the algorithm when it returns to determine the status of the operation (top of Figure 9).

DQ5: Exceeded Timing Limits

DQ5 indicates whether the program, erase, or write-to-buffer time has exceeded a specified internal pulse count limit. Under these conditions DQ5 produces a "1," indicating that the program or erase cycle was not successfully completed.

The device may output a "1" on DQ5 if the system tries to program a "1" to a location that was previously programmed to "0." **Only an erase operation can change a "0" back to a "1."** Under this condition, the device halts the operation, and when the timing limit has been exceeded, DQ5 produces a "1."

In all these cases, the system must write the reset command to return the device to the reading the array (or to erase-suspend-read if the device was previously in the erase-suspend-program mode).

DQ3: Sector Erase Timer

After writing a sector erase command sequence, the system may read DQ3 to determine whether or not erasure has begun. (The sector erase timer does not apply to the chip erase command.) If additional sectors are selected for erasure, the entire time-out also applies after each additional sector erase command. When the time-out period is complete, DQ3 switches from a "0" to a "1." If the time between additional sector erase commands from the system can be assumed to be less than 50 µs, the system need not monitor DQ3. See also the Sector Erase Command Sequence section.

After the sector erase command is written, the system should read the status of DQ7 (Data# Polling) or DQ6 (Toggle Bit I) to ensure that the device has accepted the command sequence, and then read DQ3. If DQ3 is "1," the Embedded Erase algorithm has begun; all further commands (except Erase Suspend) are ignored until the erase operation is complete. If DQ3 is "0," the device will accept additional sector erase commands. To ensure the command has been accepted, the system software should check the status of DQ3 prior to and following each subsequent sector erase command. If DQ3 is high on the second status check, the last command might not have been accepted.

Table 12 shows the status of DQ3 relative to the other status bits.

DQ1: Write-to-Buffer Abort

DQ1 indicates whether a Write-to-Buffer operation was aborted. Under these conditions DQ1 produces a "1". The system must issue the Write-to-Buffer-Abort-Reset command sequence to return the device to reading array data. See Write Buffer

Table 12. Write Operation Status

Status			DQ7 (Note 2)	DQ6	DQ5 (Note 1)	DQ3	DQ2 (Note 2)	DQ1	RY/BY#
Standard Mode	Embedded Program Algorithm		DQ7#	Toggle	0	N/A	No toggle	0	0
	Embedded Erase Algorithm		0	Toggle	0	1	Toggle	N/A	0
Program Suspend Mode	Program-Suspend Read	Program-Suspended Sector	Invalid (not allowed)						1
		Non-Program Suspended Sector	Data						1
Erase Suspend Mode	Erase-Suspend Read	Erase-Suspended Sector	1	No toggle	0	N/A	Toggle	N/A	1
		Non-Erase Suspended Sector	Data						1
	Erase-Suspend-Program (Embedded Program)		DQ7#	Toggle	0	N/A	N/A	N/A	0
Write-to-Buffer	Busy (Note 3)		DQ7#	Toggle	0	N/A	N/A	0	0
	Abort (Note 4)		DQ7#	Toggle	0	N/A	N/A	1	0

Notes:

1. *DQ5 switches to '1' when an Embedded Program, Embedded Erase, or Write-to-Buffer operation has exceeded the maximum timing limits. Refer to the section on DQ5 for more information.*
2. *DQ7 and DQ2 require a valid address when reading status information. Refer to the appropriate subsection for further details.*
3. *The Data# Polling algorithm should be used to monitor the last loaded write-buffer address location.*
4. *DQ1 switches to '1' when the device has aborted the write-to-buffer operation.*

ABSOLUTE MAXIMUM RATINGS

查询"L320ML11NI"供应商

Storage Temperature

Plastic Packages . . . . . –65°C to +150°C

Ambient Temperature
with Power Applied. . . . . –65°C to +125°C

Voltage with Respect to Ground

V_{CC} (Note 1) . . . . . –0.5 V to +4.0 V

V_{IO}. . . . . –0.5 V to +4.0 V

A9, OE#, ACC, and RESET#
(Note 2). . . . . –0.5 V to +12.5 V

All other pins (Note 1). . . . . –0.5 V to V_{CC} +0.5 V

Output Short Circuit Current (Note 3) . . . . . 200 mA

Notes:

1. *Minimum DC voltage on input or I/O pins is –0.5 V. During voltage transitions, input or I/O pins may overshoot V_{SS} to –2.0 V for periods of up to 20 ns. Maximum DC voltage on input or I/O pins is V_{CC} +0.5 V. See Figure 10. During voltage transitions, input or I/O pins may overshoot to V_{CC} +2.0 V for periods up to 20 ns. See Figure 11.*
2. *Minimum DC input voltage on pins A9, OE#, ACC, and RESET# is –0.5 V. During voltage transitions, A9, OE#, ACC, and RESET# may overshoot V_{SS} to –2.0 V for periods of up to 20 ns. See Figure 10. Maximum DC input voltage on pin A9, OE#, ACC, and RESET# is +12.5 V which may overshoot to +14.0 V for periods up to 20 ns.*
3. *No more than one output may be shorted to ground at a time. Duration of the short circuit should not be greater than one second.*

Stresses above those listed under "Absolute Maximum Ratings" may cause permanent damage to the device. This is a stress rating only; functional operation of the device at these or any other conditions above those indicated in the operational sections of this data sheet is not implied. Exposure of the device to absolute maximum rating conditions for extended periods may affect device reliability.

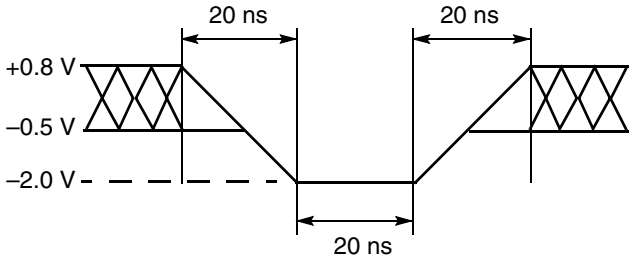

Figure 10. Maximum Negative Overshoot Waveform

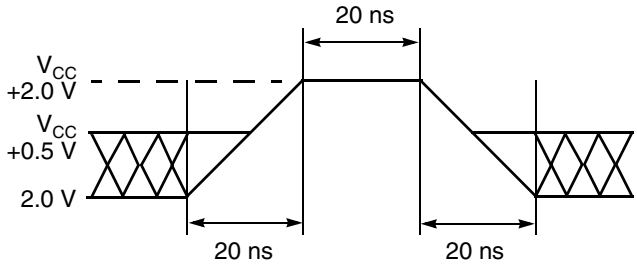

Figure 11. Maximum Positive Overshoot Waveform

OPERATING RANGES

Industrial (I) Devices

Ambient Temperature (T_A) . . . . . –40°C to +85°C

Supply Voltages

V_{CC} full voltage range. . . . . 2.7–3.6 V

V_{CC} regulated voltage range . . . . . 3.0–3.6 V

V_{IO} (Note 2) . . . . . 1.65–3.6 V

Notes:

1. *Operating ranges define those limits between which the functionality of the device is guaranteed.*
2. *See Ordering Information section for valid V_{CC}/V_{IO} range combinations. The I/Os will not operate at 3 V when V_{IO} = 1.8 V.*

DC CHARACTERISTICS

查询"L320ML11NI"供应商

CMOS Compatible

Parameter Symbol	Parameter Description (Notes)	Test Conditions		Min	Typ	Max	Unit
I_{LI}	Input Load Current (1)	$V_{IN} = V_{SS}$ to V_{CC}, $V_{CC} = V_{CC\ max}$				±1.0	µA
I_{LIT}	A9, ACC Input Load Current	$V_{CC} = V_{CC\ max}$; A9 = 12.5 V				35	µA
I_{LR}	Reset Leakage Current	$V_{CC} = V_{CC\ max}$; RESET# = 12.5 V				35	µA
I_{LO}	Output Leakage Current	$V_{OUT} = V_{SS}$ to V_{CC}, $V_{CC} = V_{CC\ max}$				±1.0	µA
I_{CC1}	V_{CC} Active Read Current (2, 3)	CE# = V_{IL}, OE# = V_{IH},	5 MHz		3	34	mA
			1 MHz		13	43	
I_{CC2}	V_{CC} Initial Page Read Current (2, 3)	CE# = V_{IL}, OE# = V_{IH}	1 MHz		4	50	mA
			10 MHz		40	80	
I_{CC3}	V_{CC} Intra-Page Read Current (2, 3)	CE# = V_{IL}, OE# = V_{IH}	10 MHz		3	20	
			33 MHz		6	40	mA
I_{CC4}	V_{CC} Active Write Current (3, 4)	CE# = V_{IL}, OE# = V_{IH}			50	60	mA
I_{CC5}	V_{CC} Standby Current (3)	CE#, RESET# = V_{CC} ± 0.3 V, WP# = V_{IH}			1	5	µA
I_{CC6}	V_{CC} Reset Current (3)	RESET# = V_{SS} ± 0.3 V, WP# = V_{IH}			1	5	µA
I_{CC7}	Automatic Sleep Mode (3, 5)	$V_{IH} = V_{CC}$ ± 0.3 V; $V_{IL} = V_{SS}$ ± 0.3 V, WP# = V_{IH}			1	5	µA
V_{IL1}	Input Low Voltage 1(5, 6)			–0.5		0.8	V
V_{IH1}	Input High Voltage 1 (5, 6)			1.9		V_{CC} + 0.5	V
V_{IL2}	Input Low Voltage 2 (5, 7)			–0.5		0.3 x V_{IO}	V
V_{IH2}	Input High Voltage 2 (5, 7)			1.9		V_{IO} + 0.5	V
V_{HH}	Voltage for ACC Program Acceleration	V_{CC} = 2.7 –3.6 V		11.5		12.5	V
V_{ID}	Voltage for Autoselect and Temporary Sector Unprotect	V_{CC} = 2.7 –3.6 V		11.5		12.5	V
V_{OL}	Output Low Voltage	I_{OL} = 4.0 mA, $V_{CC} = V_{CC\ min} = V_{IO}$				0.15 x V_{IO}	V
V_{OH1}	Output High Voltage	I_{OH} = –2.0 mA, $V_{CC} = V_{CC\ min} = V_{IO}$		0.85 V_{IO}			V
V_{OH2}		I_{OH} = –100 µA, $V_{CC} = V_{CC\ min} = V_{IO}$		V_{IO}–0.4			V
V_{LKO}	Low V_{CC} Lock-Out Voltage (8)			2.3		2.5	V
V_{IL1}	Input Low Voltage 1(5, 6)			–0.5		0.8	V

Notes:

1. *On the WP#/ACC pin only, the maximum input load current when WP# = V_{IL} is ± 5.0 µA.*
2. *The I_{CC} current listed is typically less than 2 mA/MHz, with OE# at V_{IH}.*
3. *Maximum I_{CC} specifications are tested with $V_{CC} = V_{CC}$max.*
4. *I_{CC} active while Embedded Erase or Embedded Program is in progress.*
5. *Automatic sleep mode enables the low power mode when addresses remain stable for t_{ACC} + 30 ns. TIf $V_{IO} < V_{CC}$, maximum V_{IL} for CE# and DQ I/Os is 0.3 V_{IO}. If $V_{IO} < V_{CC}$, minimum V_{IH} for CE# and DQ I/Os is 0.7 V_{IO}. Maximum V_{IH} for these connections is V_{IO} + 0.3 V*
6. *V_{CC} voltage requirements.*
7. *V_{IO} voltage requirements.*
8. *Not 100% tested.*
9. *Includes RY/BY#*

TEST CONDITIONS

查询"L320ML11NI"供应商

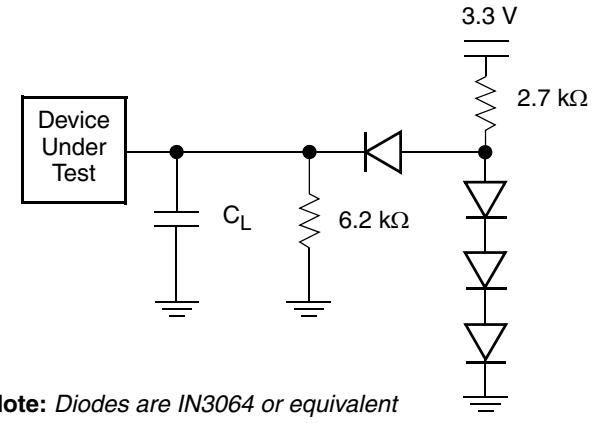

Note: *Diodes are IN3064 or equivalent*

Figure 12. Test Setup

Table 13. Test Specifications

Test Condition	All Speeds	Unit
Output Load	1 TTL gate	
Output Load Capacitance, C_L (including jig capacitance)	30	pF
Input Rise and Fall Times	5	ns
Input Pulse Levels	0.0–3.0	V
Input timing measurement reference levels (See Note)	1.5	V
Output timing measurement reference levels	0.5 V_{IO}	V

Note: *If $V_{IO} < V_{CC}$, the reference level is 0.5 V_{IO}.*

KEY TO SWITCHING WAVEFORMS

WAVEFORM	INPUTS	OUTPUTS
	Steady	
	Changing from H to L	
	Changing from L to H	
	Don't Care, Any Change Permitted	Changing, State Unknown
	Does Not Apply	Center Line is High Impedance State (High Z)

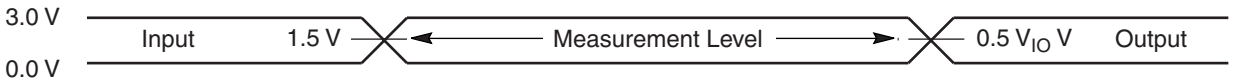

Note: *If $V_{IO} < V_{CC}$, the input measurement reference level is 0.5 V_{IO}.*

Figure 13. Input Waveforms and Measurement Levels

AC CHARACTERISTICS

查询"L320ML11NJ"供应商

Read-Only Operations

Parameter						Speed Options						
JEDEC	Std.	Description		Test Setup		90R	101, 101R	112R	112	120R	120	Unit
t_{AVAV}	t_{RC}	Read Cycle Time (Note 1)			Min	90	100	110		120		ns
t_{AVQV}	t_{ACC}	Address to Output Delay		CE#, OE# = V_{IL}	Max	90	100	110		120		ns
t_{ELQV}	t_{CE}	Chip Enable to Output Delay		OE# = V_{IL}	Max	90	100	110		120		ns
	t_{PACC}	Page Access Time			Max	25	30	30	40	30	40	ns
t_{GLQV}	t_{OE}	Output Enable to Output Delay			Max	25	30	30	40	30	40	ns
t_{EHQZ}	t_{DF}	Chip Enable to Output High Z (Note 1)			Max	16						ns
t_{GHQZ}	t_{DF}	Output Enable to Output High Z (Note 1)			Max	16						ns
t_{AXQX}	t_{OH}	Output Hold Time From Addresses, CE# or OE#, Whichever Occurs First			Min	0						ns
	t_{OEH}	Output Enable Hold Time (Note 1)	Read		Min	0						ns
			Toggle and Data# Polling		Min	10						ns

Notes:

1. *Not 100% tested.*
2. *See Figure 12 and Table 13 for test specifications.*
3. *AC specifications listed are tested with VIO = VCC. Contact AMD for information on AC operation VIO ≠ VCC.*

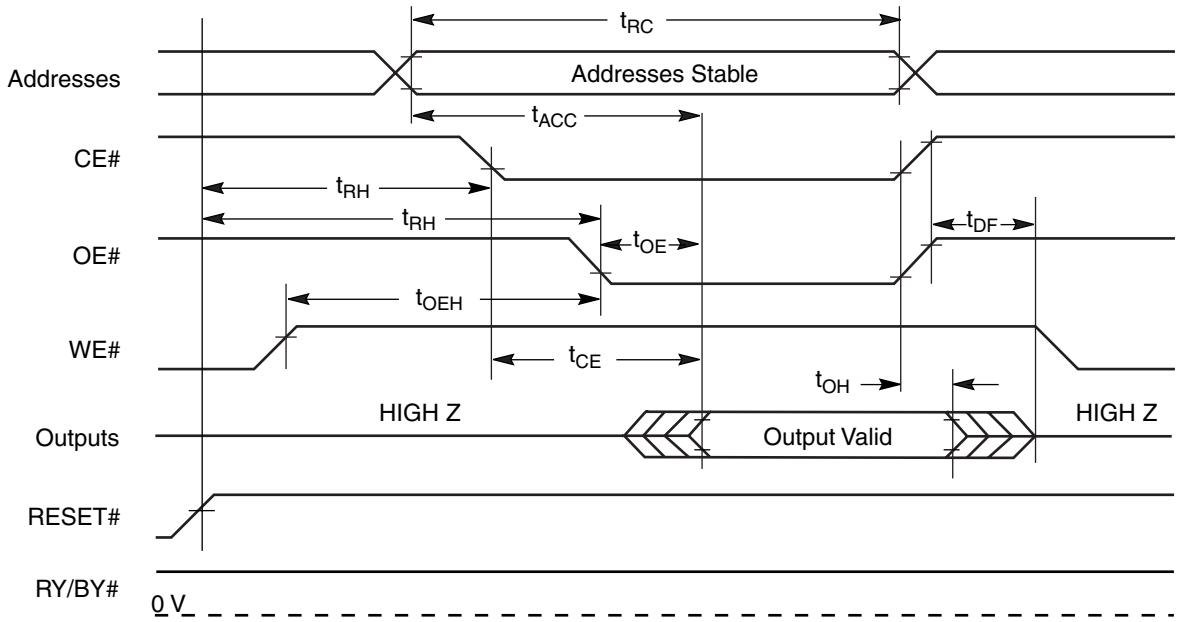

Figure 14. Read Operation Timing

AC CHARACTERISTICS

查询"L320ML11NI"供应商

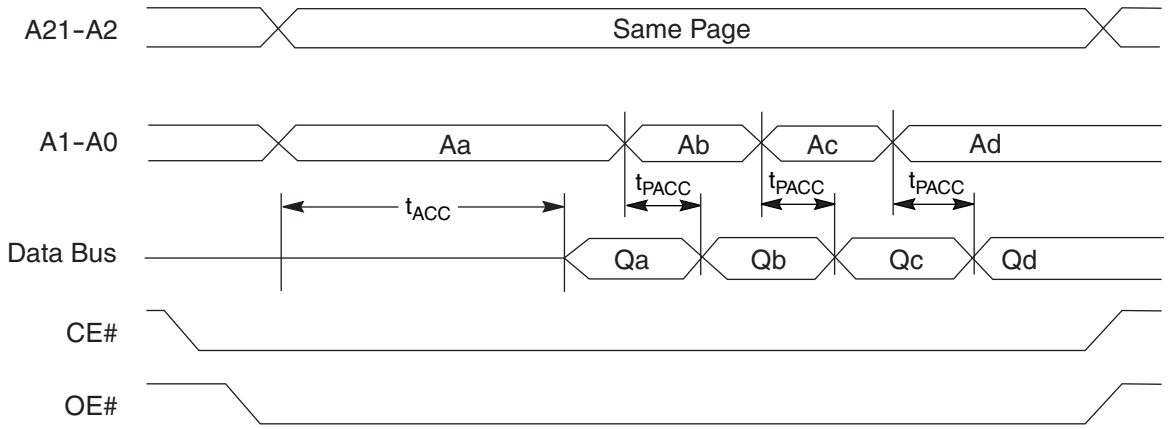

** Figure shows device in word mode. Addresses are A1–A-1 for byte mode.*

Figure 15. Page Read Timings

AC CHARACTERISTICS

查询"L320ML11NL"供应商

Hardware Reset (RESET#)

Parameter		Description		All Speed Options	Unit
JEDEC	Std.				
	t_{Ready}	RESET# Pin Low (During Embedded Algorithms) to Read Mode (See Note)	Max	20	µs
	t_{Ready}	RESET# Pin Low (NOT During Embedded Algorithms) to Read Mode (See Note)	Max	500	ns
	t_{RP}	RESET# Pulse Width	Min	500	ns
	t_{RH}	Reset High Time Before Read (See Note)	Min	50	ns
	t_{RPD}	RESET# Low to Standby Mode	Min	20	µs

Note:

1. *Not 100% tested*
2. *AC specifications listed are tested with $V_{IO} = V_{CC}$. Contact AMD for information on AC operation with $V_{IO} \neq V_{CC}$.*

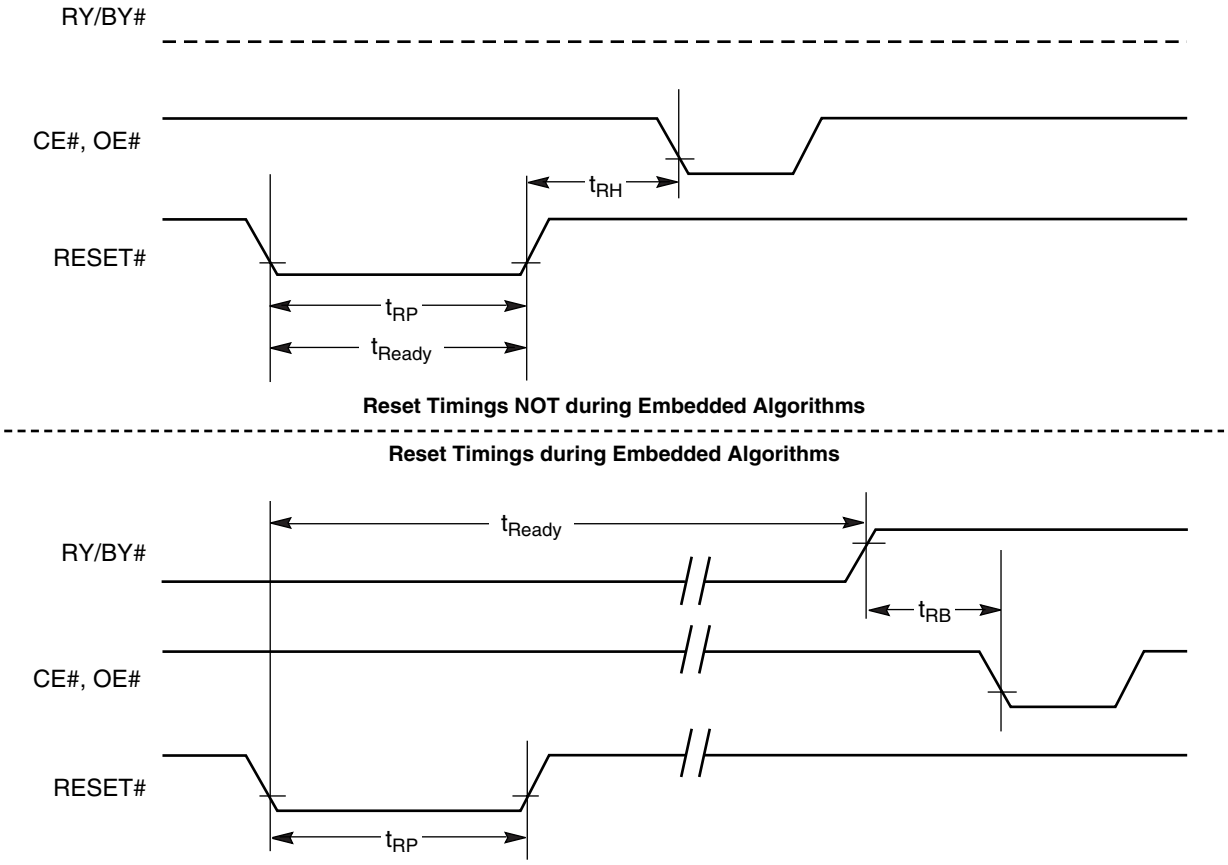

Figure 16. Reset Timings

AC CHARACTERISTICS

查询"L320ML11NI"供应商

Erase and Program Operations

Parameter					Speed Options				
JEDEC	Std.	Description			90R	101, 101R	112, 112R	120, 120R	Unit
t_{AVAV}	t_{WC}	Write Cycle Time (Note 1)		Min	90	100	110	120	ns
t_{AVWL}	t_{AS}	Address Setup Time		Min	0				ns
	t_{ASO}	Address Setup Time to OE# low during toggle bit polling		Min	15				ns
t_{WLAX}	t_{AH}	Address Hold Time		Min	45				ns
	t_{AHT}	Address Hold Time From CE# or OE# high during toggle bit polling		Min	0				ns
t_{DVWH}	t_{DS}	Data Setup Time		Min	45				ns
t_{WHDX}	t_{DH}	Data Hold Time		Min	0				ns
	t_{OEPH}	Output Enable High during toggle bit polling		Min	20				ns
t_{GHWL}	t_{GHWL}	Read Recovery Time Before Write (OE# High to WE# Low)		Min	0				ns
t_{ELWL}	t_{CS}	CE# Setup Time		Min	0				ns
t_{WHEH}	t_{CH}	CE# Hold Time		Min	0				ns
t_{WLWH}	t_{WP}	Write Pulse Width		Min	35				ns
t_{WHDL}	t_{WPH}	Write Pulse Width High		Min	30				ns
t_{WHWH1}	t_{WHWH1}	Write Buffer Program Operation (Notes 2, 3)		Typ	240				µs
		Effective Write Buffer Program Operation (Notes 2, 4)	Per Byte	Typ	7.5				µs
			Per Word	Typ	15				µs
		Accelerated Effective Write Buffer Program Operation (Notes 2, 5)	Per Byte	Typ	6.25				µs
			Per Word	Typ	12.5				µs
		Single Word/Byte Program Operation (Notes 2, 5)	Byte	Typ	60				µs
			Word		60				
		Accelerated Single Word/Byte Programming Operation (Note 2)	Byte	Typ	54				µs
			Word		54				
t_{WHWH2}	t_{WHWH2}	Sector Erase Operation (Note 2)		Typ	0.5				sec
	t_{VHH}	V_{HH} Rise and Fall Time (Note 1)		Min	250				ns
	t_{VCS}	V_{CC} Setup Time (Note 1)		Min	50				µs
	t_{BUSY}	WE# to RY/BY#		Max	90	100	110	120	ns
	t_{POLL}	Program Valid Before Status Polling (Note 7)		Max	4				µs

Notes:

1. *Not 100% tested.*
2. *See the "Erase And Programming Performance" section for more information.*
3. *For 1–16 words/1–32 bytes programmed.*
4. *Effective write buffer specification is based upon a 16-word/32-byte write buffer operation.*
5. *Word/Byte programming specification is based upon a single word/byte programming operation not utilizing the write buffer.*
6. *AC specifications listed are tested with $V_{IO} = V_{CC}$. Contact AMD for information on AC operation with $V_{IO} \neq V_{CC}$.*
7. *When using the program suspend/resume feature, if the suspend command is issued within t_{POLL}, t_{POLL} must be fully re-applied upon resuming the programming operation. If the suspend command is issued after t_{POLL}, t_{POLL} is not required again prior to reading the status bits upon resuming.*

AC CHARACTERISTICS

查询"L320ML11NI"供应商

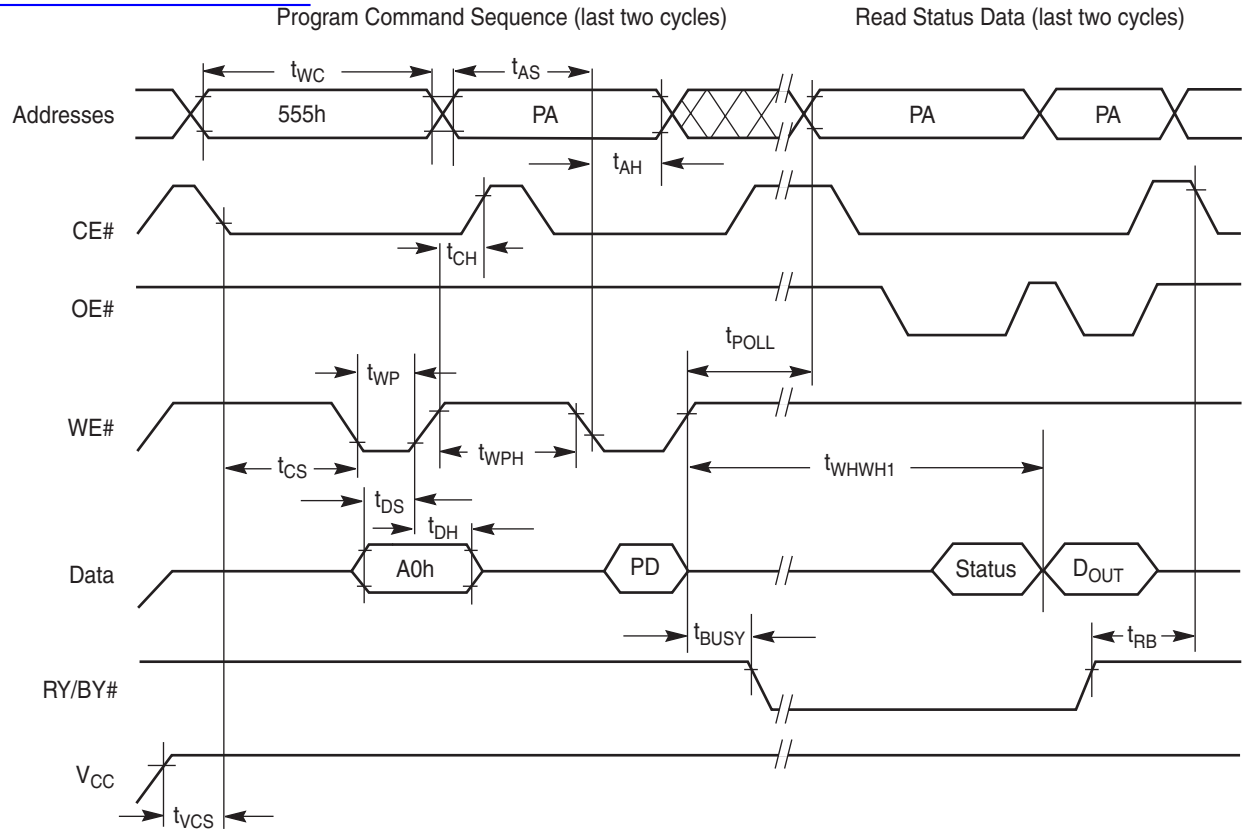

Notes:

1. *PA = program address, PD = program data, D_{OUT} is the true data at the program address.*
2. *Illustration shows device in word mode.*

Figure 17. Program Operation Timings

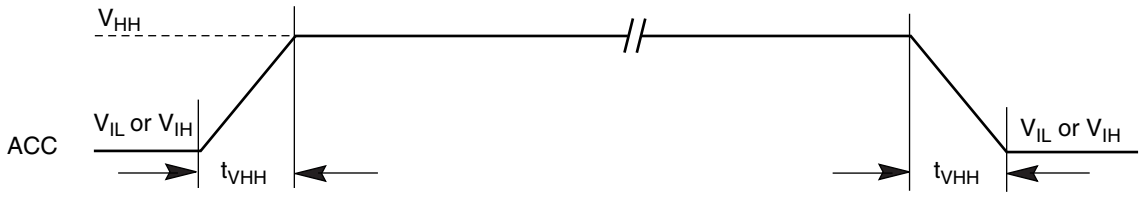

Figure 18. Accelerated Program Timing Diagram

AC CHARACTERISTICS

查询"L320ML11NI"供应商

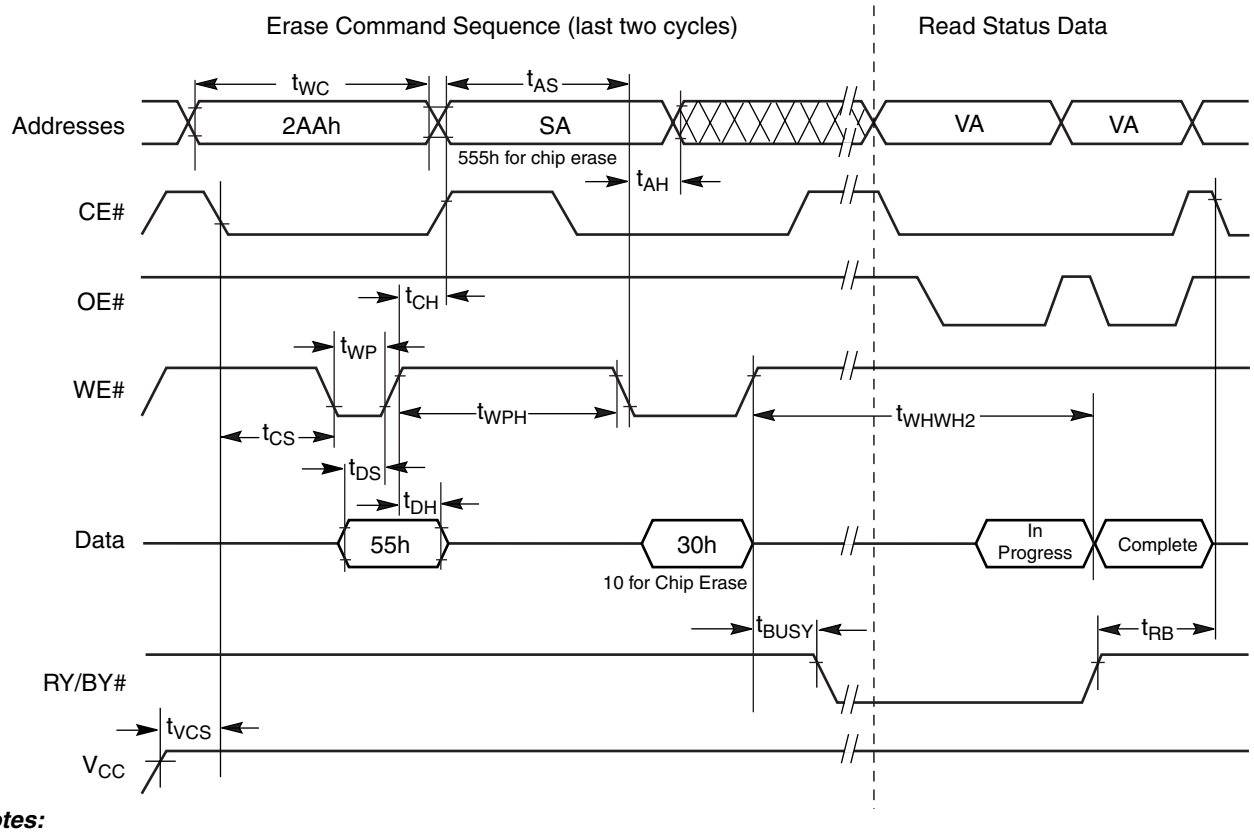

Notes:

1. *SA = sector address (for Sector Erase), VA = Valid Address for reading status data (see "Write Operation Status".*
2. *Illustration shows device in word mode.*

Figure 19. Chip/Sector Erase Operation Timings

AC CHARACTERISTICS

查询"L320ML11NI"供应商

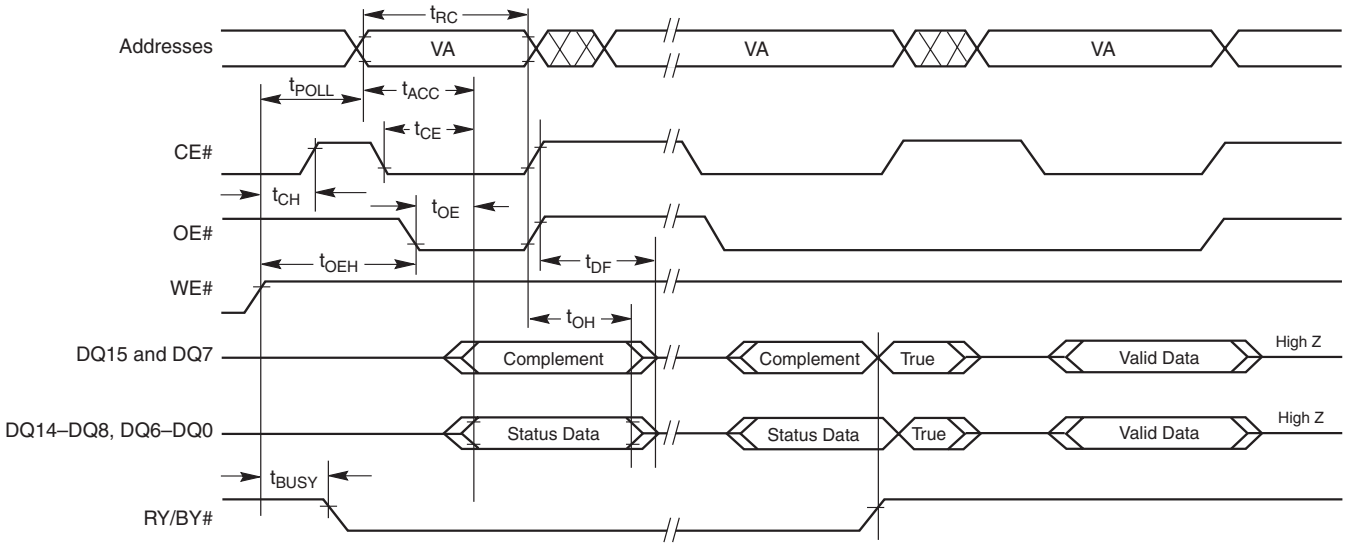

Note: *VA = Valid address. Illustration shows first status cycle after command sequence, last status read cycle, and array data read cycle.*

Figure 20. Data# Polling Timings (During Embedded Algorithms)

AC CHARACTERISTICS

查询"L320ML11NI"供应商

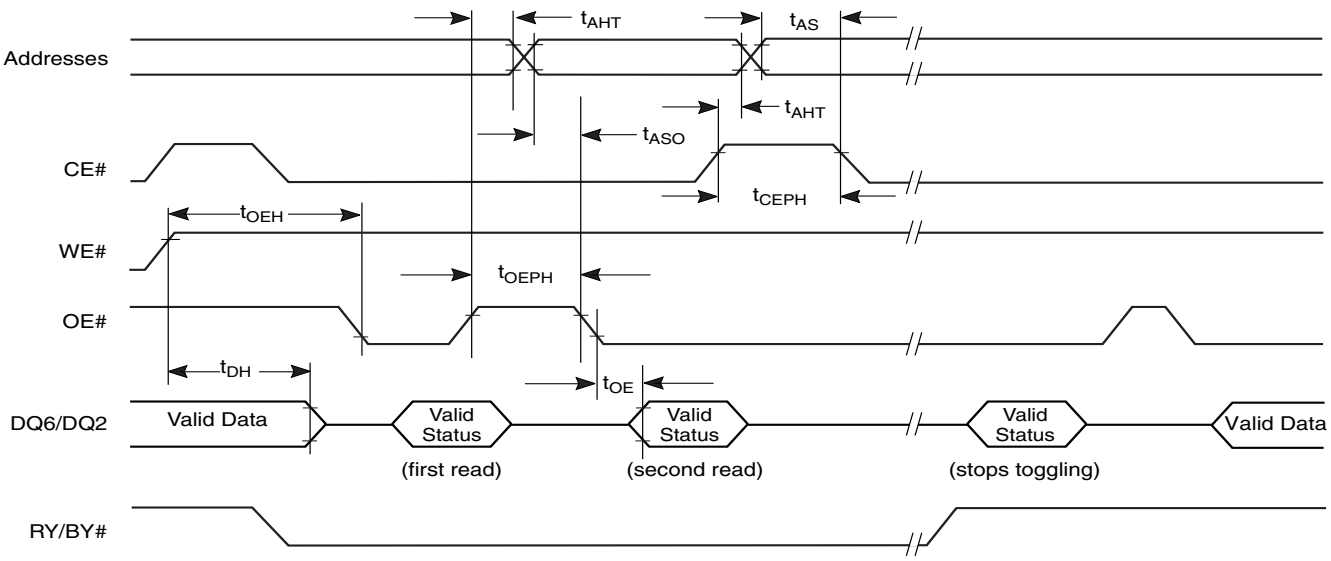

Note: *VA = Valid address; not required for DQ6. Illustration shows first two status cycle after command sequence, last status read cycle, and array data read cycle*

Figure 21. Toggle Bit Timings (During Embedded Algorithms)

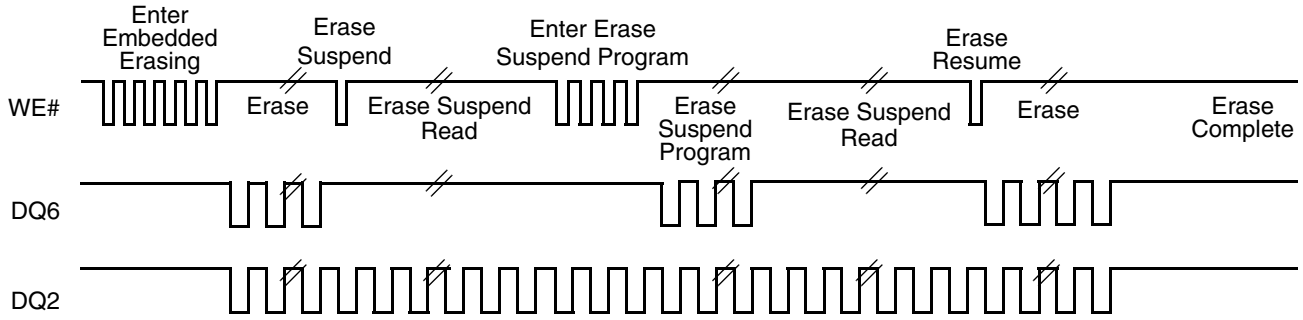

Note: *DQ2 toggles only when read at an address within an erase-suspended sector. The system may use OE# or CE# to toggle DQ2 and DQ6.*

Figure 22. DQ2 vs. DQ6

AC CHARACTERISTICS

查询"L320ML11NI"供应商

Temporary Sector Unprotect

Parameter					
JEDEC	Std	Description		All Speed Options	Unit
	t_{VIDR}	V_{ID} Rise and Fall Time (See Note)	Min	500	ns
	t_{RSP}	RESET# Setup Time for Temporary Sector Unprotect	Min	4	µs

Note:

1. *Not 100% tested.*
2. *AC specifications listed are tested with $V_{IO} = V_{CC}$. Contact AMD for information on AC operation with $V_{IO} \neq V_{CC}$.*

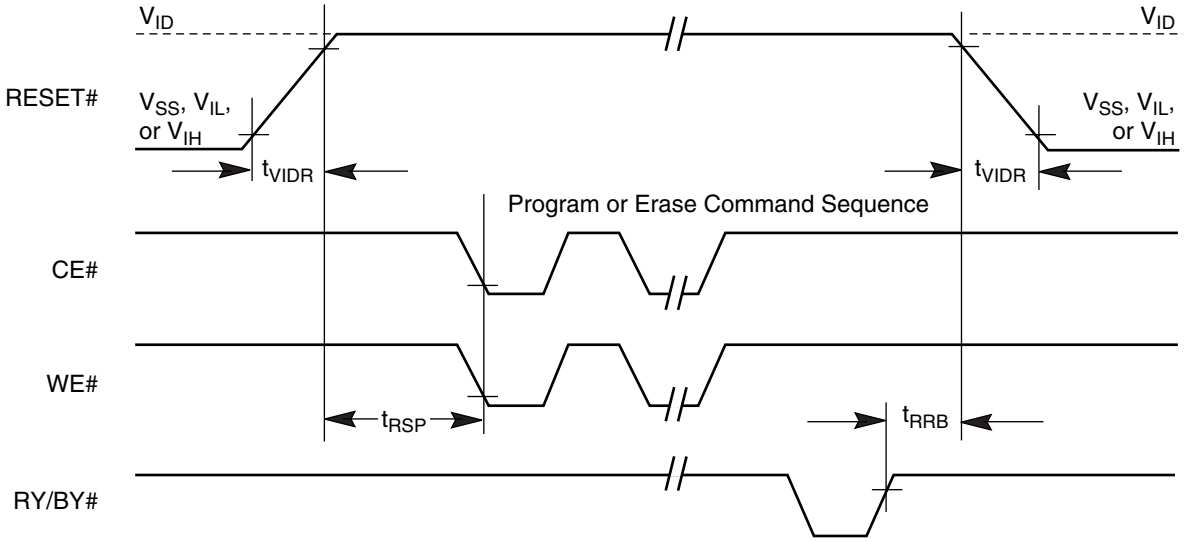

Figure 23. Temporary Sector Group Unprotect Timing Diagram

AC CHARACTERISTICS

查询"L320ML11NI"供应商

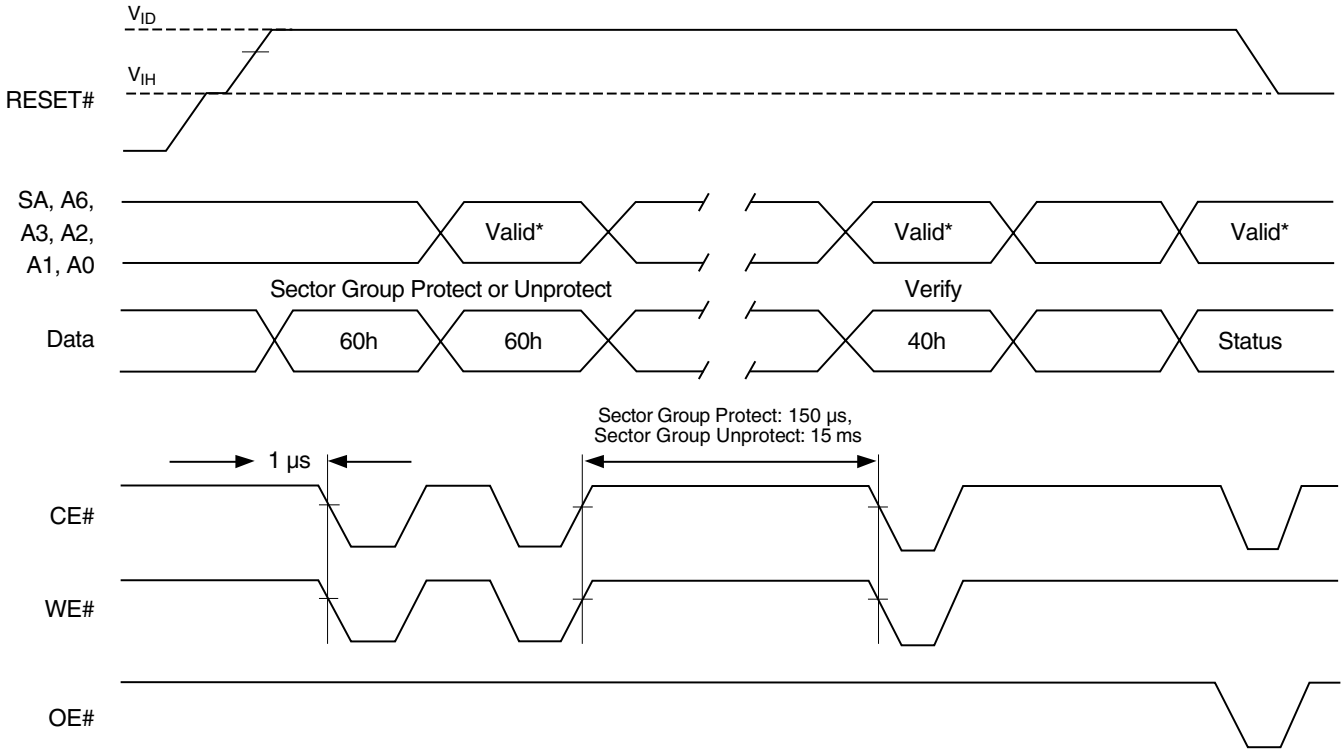

** For sector group protect, A6:A0 = 0xx0010. For sector group unprotect, A6:A0 = 1xx0010.*

Figure 24. Sector Group Protect and Unprotect Timing Diagram

AC CHARACTERISTICS

查询"L320ML11NJ"供应商

Alternate CE# Controlled Erase and Program Operations

Parameter					Speed Options				
JEDEC	Std.	Description			90R	101, 101R	112, 112R	120, 120R	Unit
t_{AVAV}	t_{WC}	Write Cycle Time (Note 1)		Min	90	100	110	120	ns
t_{AVWL}	t_{AS}	Address Setup Time		Min	0				ns
t_{ELAX}	t_{AH}	Address Hold Time		Min	45				ns
t_{DVEH}	t_{DS}	Data Setup Time		Min	45				ns
t_{EHDX}	t_{DH}	Data Hold Time		Min	0				ns
t_{GHEL}	t_{GHEL}	Read Recovery Time Before Write (OE# High to WE# Low)		Min	0				ns
t_{WLEL}	t_{WS}	WE# Setup Time		Min	0				ns
t_{EHWH}	t_{WH}	WE# Hold Time		Min	0				ns
t_{ELEH}	t_{CP}	CE# Pulse Width		Min	45				ns
t_{EHEL}	t_{CPH}	CE# Pulse Width High		Min	30				ns
t_{WHWH1}	t_{WHWH1}	Write Buffer Program Operation (Notes 2, 3)		Typ	240				µs
		Effective Write Buffer Program Operation (Notes 2, 4)	Per Byte	Typ	7.5				µs
			Per Word	Typ	15				µs
		Accelerated Effective Write Buffer Program Operation (Notes 2, 4)	Per Byte	Typ	6.25				µs
			Per Word	Typ	12.5				µs
		Single Word/Byte Program Operation (Note 2, 5)	Byte	Typ	60				µs
			Word		60				
		Accelerated Single Word/Byte Programming Operation (Note 2)	Byte	Typ	54				µs
			Word		54				
t_{WHWH2}	t_{WHWH2}	Sector Erase Operation (Note 2, 5)		Typ	0.5				sec
	t_{RH}	RESET High Time Before Write (Note 1)		Min	50				ns
	t_{POLL}	Program Valid before Status Polling (Note 7)		Max	4				µs

Notes:

1. *Not 100% tested.*
2. *See the "Erase And Programming Performance" section for more information.*
3. *For 1–16 words/1–32 bytes programmed.*
4. *Effective write buffer specification is based upon a 16-word/32-byte write buffer operation.*
5. *Word/Byte programming specification is based upon a single word/byte programming operation not utilizing the write buffer.*
6. *AC specifications listed are tested with $V_{IO} = V_{CC}$. Contact AMD for information on AC operation with $V_{IO} \neq V_{CC}$.*
7. *When using the program suspend/resume feature, if the suspend command is issued within t_{POLL}, t_{POLL} must be fully re-applied upon resuming the programming operation. If the suspend command is issued after t_{POLL}, t_{POLL} is not required again prior to reading the status bits upon resuming.*

AC CHARACTERISTICS

查询"L320ML11NI"供应商

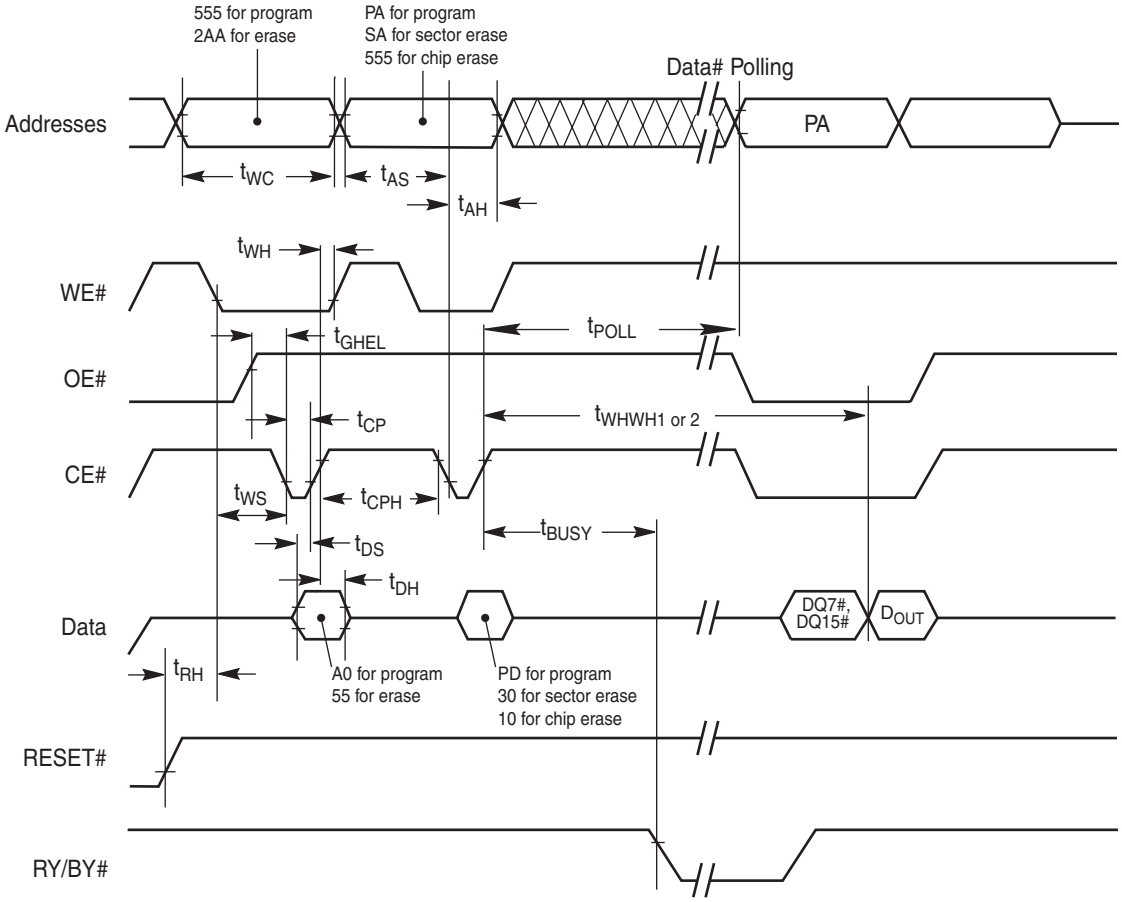

Notes:

1. *Figure indicates last two bus cycles of a program or erase operation.*
2. *PA = program address, SA = sector address, PD = program data.*
3. *DQ7# is the complement of the data written to the device. D_{OUT} is the data written to the device.*
4. *Illustration shows device in word mode.*

Figure 25. Alternate CE# Controlled Write (Erase/Program) Operation Timings

ERASE AND PROGRAMMING PERFORMANCE

查询"L320ML11NI"供应商

Parameter		Typ (Note 1)	Max (Note 2)	Unit	Comments
Sector Erase Time		0.5	3.5	sec	Excludes 00h programming prior to erasure (Note 6)
Chip Erase Time		32	64	sec	
Single Word/Byte Program Time (Note 3)		60	600	µs	Excludes system level overhead (Note 7)
Accelerated Single Word/Byte Program Time (Note 3)		54	540	µs	
Total Write Buffer Program Time (Note 4)		240	1200	µs	
Effective Write Buffer Program Time (Note 5)	Per Byte	7.5	38	µs	
	Per Word	15	75	µs	
Total Accelerated Write Buffer Program Time (Note 4)		200	1040	µs	
Effective Accelerated Write Buffer Program Time (Note 5)	Per Byte	6.25	33	µs	
	Per Word	12.5	65	µs	
Chip Program Time		31.5	73	sec	

Notes:

1. *Typical program and erase times assume the following conditions: 25°C, 3.0 V V_{CC}. Programming specification assume that all bits are programmed to 00h.*
2. *Maximum values are measured at V_{CC} = 3.0, worst case temperature. Maximum values are valid up to and including 100,000 program/erase cycles.*
3. *Word/Byte programming specification is based upon a single word/byte programming operation not utilizing the write buffer.*
4. *For 1-16 words or 1-32 bytes programmed in a single write buffer programming operation.*
5. *Effective write buffer specification is calculated on a per-word/per-byte basis for a 16-word/32-byte write buffer operation.*
6. *In the pre-programming step of the Embedded Erase algorithm, all bits are programmed to 00h before erasure.*
7. *System-level overhead is the time required to execute the command sequence (s) for the program command. See Tables 12 and 13 for further information on command definitions.*
8. *The device has a minimum erase and program cycle endurance of 100,000 cycles.*

LATCHUP CHARACTERISTICS

Description	Min	Max
Input voltage with respect to V_{SS} on all pins except I/O pins (including A9, OE#, and RESET#)	–1.0 V	12.5 V
Input voltage with respect to V_{SS} on all I/O pins	–1.0 V	V_{CC} + 1.0 V
V_{CC} Current	–100 mA	+100 mA

Note: *Includes all pins except V_{CC}. Test conditions: V_{CC} = 3.0 V, one pin at a time.*

TSOP PIN AND BGA PACKAGE CAPACITANCE

查询"L320ML11NI"供应商

Parameter Symbol	Parameter Description	Test Setup		Typ	Max	Unit
C_{IN}	Input Capacitance	$V_{IN} = 0$	TSOP	6	7.5	pF
			BGA	4.2	5	pF
C_{OUT}	Output Capacitance	$V_{OUT} = 0$	TSOP	8.5	12	pF
			BGA	5.4	6.5	pF
C_{IN2}	Control Pin Capacitance	$V_{IN} = 0$	TSOP	7.5	9	pF
			BGA	3.9	4.7	pF

Notes:

1. *Sampled, not 100% tested.*
2. *Test conditions T_A = 25°C, f = 1.0 MHz.*

DATA RETENTION

Parameter Description	Test Conditions	Min	Unit
Minimum Pattern Data Retention Time	150°C	10	Years
	125°C	20	Years

PHYSICAL DIMENSIONS

查询"L320ML11NL"供应商

TS056/TSR056—56-Pin Standard and Reverse Pinout Thin Small Outline Package (TSOP)

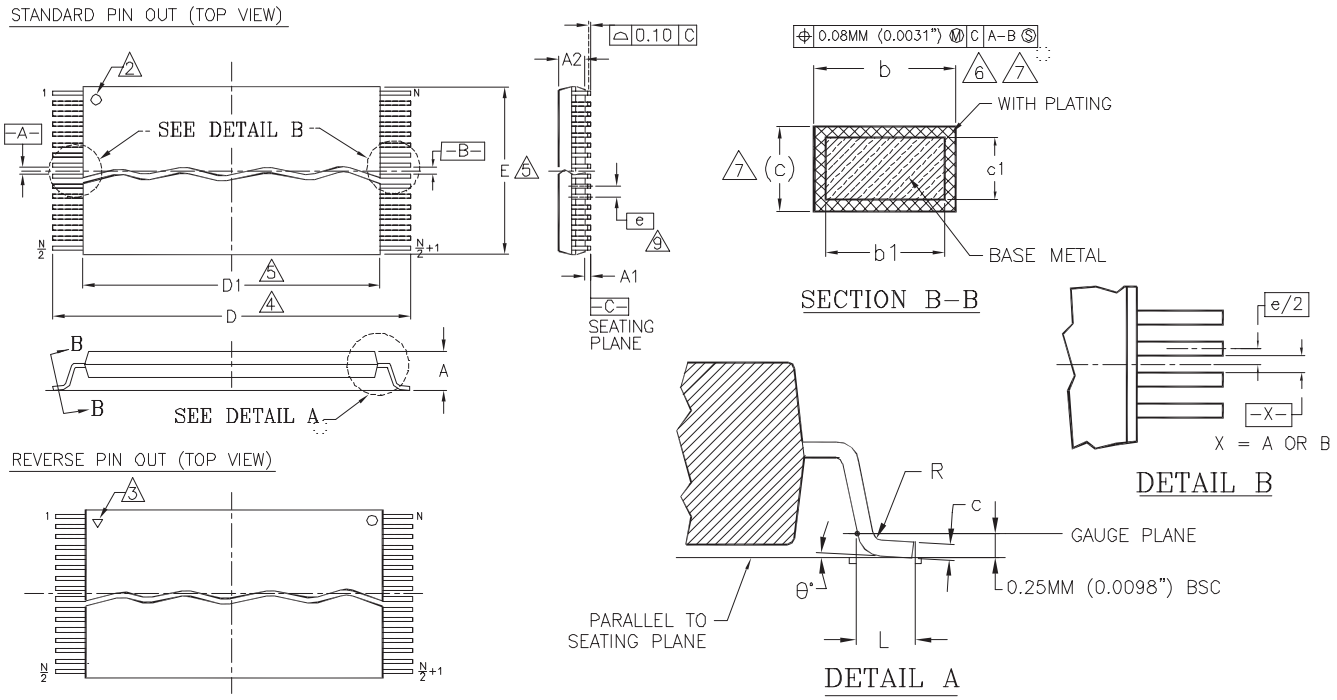

PACKAGE	TS/TSR 56		
JEDEC	MO-142 (B) EC		
SYMBOL	MIN.	NOM.	MAX.
A	---	---	1.20
A1	0.05	---	0.15
A2	0.95	1.00	1.05
b1	0.17	0.20	0.23
b	0.17	0.22	0.27
c1	0.10	---	0.16
c	0.10	---	0.21
D	19.90	20.00	20.20
D1	18.30	18.40	18.50
E	13.90	14.00	14.10
e	0.50 BASIC		
L	0.50	0.60	0.70
Ø	0°	3°	5°
R	0.08	---	0.20
N	56		

NOTES:

1. CONTROLLING DIMENSIONS ARE IN MILLIMETERS (mm). (DIMENSIONING AND TOLERANCING CONFORMS TO ANSI Y14.5M-1982.)
2. PIN 1 IDENTIFIER FOR STANDARD PIN OUT (DIE UP).
3. PIN 1 IDENTIFIER FOR REVERSE PIN OUT (DIE DOWN), INK OR LASER MARK.
4. TO BE DETERMINED AT THE SEATING PLANE -C-. THE SEATING PLANE IS DEFINED AS THE PLANE OF CONTACT THAT IS MADE WHEN THE PACKAGE LEADS ARE ALLOWED TO REST FREELY ON A FLAT HORIZONTAL SURFACE.
5. DIMENSIONS D1 AND E DO NOT INCLUDE MOLD PROTRUSION. ALLOWABLE MOLD PROTUSION IS 0.15 mm PER SIDE.
6. DIMENSION b DOES NOT INCLUDE DAMBAR PROTUSION. ALLOWABLE DAMBAR PROTUSION SHALL BE 0.08 mm TOTAL IN EXCESS OF b DIMENSION AT MAX MATERIAL CONDITION. MINIMUM SPACE BETWEEN PROTRUSION AND AN ADJACENT LEAD TO BE 0.07 mm.
7. THESE DIMESIONS APPLY TO THE FLAT SECTION OF THE LEAD BETWEEN 0.10 mm AND 0.25 mm FROM THE LEAD TIP.
8. LEAD COPLANARITY SHALL BE WITHIN 0.10 mm AS MEASURED FROM THE SEATING PLANE.
9. DIMENSION "e" IS MEASURED AT THE CENTERLINE OF THE LEADS.

3160\38.10A

PHYSICAL DIMENSIONS

查询"L320ML11NI"供应商

LAA064—64-Ball Fortified Ball Grid Array (FBGA) 13 x 11 mm Package

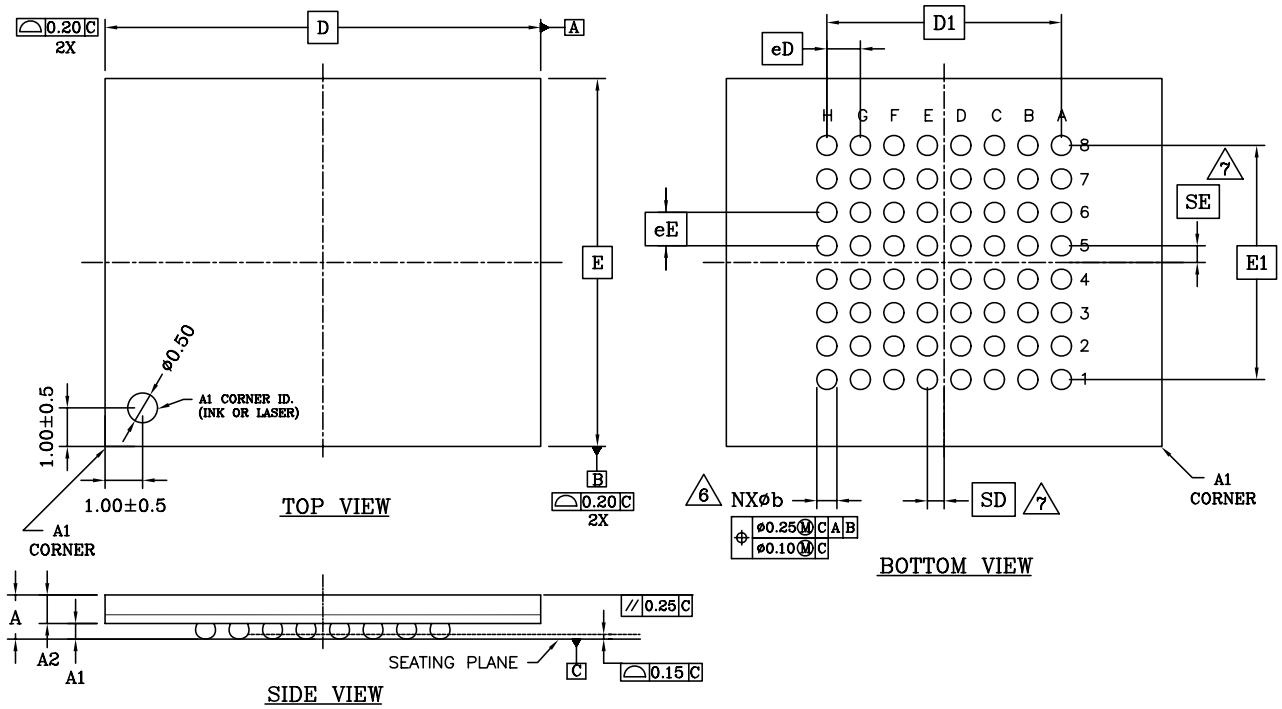

PACKAGE	LAA 064			
JEDEC	N/A			
	13.00x11.00 mm PACKAGE			
SYMBOL	MIN.	NOM.	MAX.	NOTE
A	—	—	1.40	PROFILE HEIGHT
A1	0.40	—	—	STANDOFF
A2	0.60	—	—	BODY THICKNESS
D	13.00 BSC.			BODY SIZE
E	11.00 BSC.			BODY SIZE
D1	7.00 BSC.			MATRIX FOOTPRINT
E1	7.00 BSC.			MATRIX FOOTPRINT
MD	8			MATRIX SIZE D DIRECTION
ME	8			MATRIX SIZE E DIRECTION
N	64			BALL COUNT
øb	0.50	0.60	0.70	BALL DIAMETER
eD	1.00 BSC.			BALL PITCH — D DIRECTION
eE	1.00 BSC.			BALL PITCH — E DIRECTION
SD/SE	0.50 BSC.			SOLDER BALL PLACEMENT
	A1—A8, K1—K8			DEPOPULATED SOLDER BALLS

NOTES:

1. DIMENSIONING AND TOLERANCING METHODS PER ASME Y14.5M—1994 .
2. ALL DIMENSIONS ARE IN MILLIMETERS .
3. BALL POSITION DESIGNATION PER JESD 95—1, SPP—010 (EXCEPT AS NOTED).
4. e REPRESENTS THE SOLDER BALL GRID PITCH .
5. SYMBOL "MD" IS THE BALL MATRIX SIZE IN THE "D" DIRECTION.
   SYMBOL "ME" IS THE BALL COLUMN MATRIX SIZE IN THE "E" DIRECTION.
   N IS THE NUMBER OF POPULATED SOLDER BALL POSITIONS FOR MATRIX SIZE MD X ME.

6 DIMENSION "b" IS MEASURED AT THE MAXIMUM BALL DIAMETER IN A PLANE PARALLEL TO DATUM "C".

7 SD AND SE ARE MEASURED WITH RESPECT TO DATUMS A AND B AND DEFINE THE POSITION OF THE CENTER SOLDER BALL IN THE OUTER ROW.
WHEN THERE IS AN ODD NUMBER OF SOLDER BALLS IN THE OUTER ROW, SD OR SE = 0.000.
WHEN THERE IS AN EVEN NUMBER OF SOLDER BALLS IN THE OUTER ROW, SD OR SE = e/2

8. "X" IN THE PACKAGE VARIATIONS DENOTES PART IS UNDER QUALIFICATION.
9. "+" INDICATES THE THEORETICAL CENTER OF DEPOPULATED BALLS.

REVISION SUMMARY

查询"L320ML11NI"供应商

Revision A (May 30, 2002)

Initial release as Advance Information data sheet.

Revision A+1 (September 3, 2002)

Mirrorbit 32 Mbit Device Family

Changed the 48-pin TSOP to 40-pin TSOP.

Alternate CE# Controlled Erase and Program Operations

Added t_{RH} parameter to table.

Erase and Program Operations

Added t_{BUSY} parameter to table.

Figure 16. Program Operation Timings

Added RY/BY# to waveform.

TSOP and BGA PIN Capacitance

Added the FBGA package.

Program Suspend/Program Resume Command Sequence

Changed 15 µs typical to maximum and added 5 µs typical.

Erase Suspend/Erase Resume Commands

Changed typical from 20 µs to 5 µs and added a maximum of 20 µs.

Product Selector Guide

Added Note 2.

Ordering Information

Added 101R, 112R, and 120R to Valid Combinations Table. Added Note 1.

Read-Only Operations, Erase and Program Operations, Alternate CE# Controlled Erase and Program Operations,

Added 101R, 112R, and 120R to speed options.

Revision A+2 (November 15, 2002)

Customer Lockable: Secured Silicon Sector NOT Programmed or Protected At the Factory

Added second bullet and figure.

Product Selector Guide and Read-Only Operations

Added 30 ns to the 112R and 120R to Max page access time and Max OE# Access time.

Changed the Chip Enable to Output High Z and Output Enable to Output High Z to 16 ns.

Erase and Program Operations and Alternate CE# Controlled Erase and Program Operations

Byte/Word Program Command Sequence, Sector Erase Command Sequence, and Chip Erase Command Sequence

Noted that the Secured Silicon Sector, autoselect, and CFI functions are unavailable when a program or erase operation is in progress.

Common Flash Memory Interface (CFI)

Changed CFI website address.

DC Characteristics

Added I_{LR} parameter symbol to table. Removed V_{IL}, V_{IH}, V_{OL}, and V_{OH} and replaced with VIL, V_{IH}, V_{OL}, V_{OH1} and V_{OH2}. Clarified note #5. Removed note #6.

Read-Only Operations

Added note #3.

Absolute Maximum Rating

Changed the Ambient Temperature with Power Applied from –55°C to +125°C to –65°C to +125°C.

Revision A+3 (February 14, 2003)

Distinctive Characteristics

Corrected performance characteristics.

AC Characteristics

Added Note.

Input values in the $t_{WHWH}1$ and $t_{WHWH}2$ parameters in the Erase and Program Options table that were previously TBD. Also added notes 5 and 6.

Input values in the $t_{WHWH}1$ and $t_{WHWH}2$ parameters in the Alternate CE# Controlled Erase and Program Options table that were previously TBD. Also added notes 5 and 6.

Erase and Programming Performance

Input values into table that were previously TBD. Added note 3 and 4.

Revision B (May 7, 2003)

Distinctive Characteristics

Added typical active read current.

Global

Converted to full datasheet version. Modified Secured Silicon Sector Flash Memory Region section to include ESN references.

DC Characteristics

Corrected typical and maximum values for the I_{CC1}, I_{CC2}, and I_{CC3}.

Changed Accelerated Effective Write Buffer Program Operation value.

Erase and Programming Performance

查询"L320ML11NU"供应商

Input values into table that were previously TBD. Modified notes. Removed Word references.

Revision B +1 (February 12, 2004)

Customer Lockable: Secured Silicon Sector NOT Programmed or Protected at the Factory

Removed second paragraph.

Table 10 & Table 11: Command Definitions

Replaced the Addr information for both Program/Erase Suspend and Program/Erase Resume from BA to XXX.

Erase Suspend/Erase Resume Commands

Added note on flash device performance during suspend/erase mode.

AC Characteristics, Erase and Program Operations

Removed Byte information for t_{WHWH1} parameter. Added t_{POLL} information and footnote.

AC Characteristics

Program Operation Timings, Data# Polling Timings (During Embedded Algorithms, and Alternate CE# Controlled Write (Erase/Program) Operation Timings figures: Updated with t_{POLL} information.

AC Characteristics - Alternate CE# Controlled Erase and Program Operations

Added t_{POLL} information and footnote.

Erase and Programming Performance

Added t_{POLL} information and footnote.

Trademarks

Updated.

Cover Sheet and Title Page

Added notation referencing superseding documentation.

Revision B+2 (October 27, 2004)

Ordering Information

Added Lead-free package options.

Revision B+3 (December 14, 2005)

Global

This product has been retired and is not available for designs. For new and current designs, S29GL032A supersedes Am29LV320MH/L and is the factory-recommended migration path. Please refer to the S29GL032A datasheet for specifications and ordering information. Availability of this document is retained for reference and historical purposes only.

Revision B4 (January 31, 2007)

Global

Changed SecSi Sector to Secured Silicon Sector.

AC Characteristics

Erase and Program Operations table: Changed t_{BUSY} to a maximum specification. Deleted “t_{VCS}” from t_{BUSY} parameter name.

Colophon

The products described in this document are designed, developed and manufactured as contemplated for general use, including without limitation, ordinary industrial use, general office use, personal use, and household use, but are not designed, developed and manufactured as contemplated (1) for any use that includes fatal risks or dangers that, unless extremely high safety is secured, could have a serious effect to the public, and could lead directly to death, personal injury, severe physical damage or other loss (i.e., nuclear reaction control in nuclear facility, aircraft flight control, air traffic control, mass transport control, medical life support system, missile launch control in weapon system), or (2) for any use where chance of failure is intolerable (i.e., submersible repeater and artificial satellite). Please note that Spansion LLC will not be liable to you and/or any third party for any claims or damages arising in connection with above-mentioned uses of the products. Any semiconductor devices have an inherent chance of failure. You must protect against injury, damage or loss from such failures by incorporating safety design measures into your facility and equipment such as redundancy, fire protection, and prevention of over-current levels and other abnormal operating conditions. If any products described in this document represent goods or technologies subject to certain restrictions on export under the Foreign Exchange and Foreign Trade Law of Japan, the US Export Administration Regulations or the applicable laws of any other country, the prior authorization by the respective government entity will be required for export of those products.

Trademarks

Copyright © 2001–2005 Advanced Micro Devices, Inc. All rights reserved. AMD, the AMD logo, and combinations thereof are registered trademarks of Advanced Micro Devices, Inc. ExpressFlash is a trademark of Advanced Micro Devices, Inc. Product names used in this publication are for identification purposes only and may be trademarks of their respective companies.

Copyright © 2006–2007 Spansion Inc. All Rights Reserved. Spansion, the Spansion logo, MirrorBit, ORNAND, HD-SIM, and combinations thereof are trademarks of Spansion Inc. Other names are for informational purposes only and may be trademarks of their respective owners.