查询"1276.1003"供应商

Lichtleiter-System

Lightguide-System

Technische Daten	Technical Data	
Gehäusewerkstoff	Housing Material	PC farblos transparent
Umgebungstemperatur	Ambient Temperature	-40°C ... +85°C

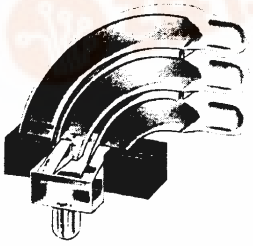

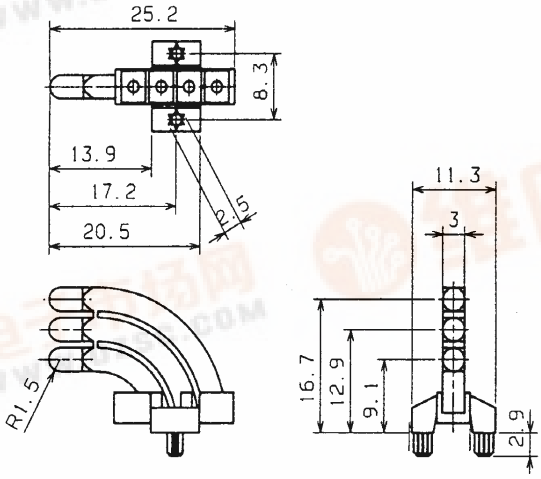

LED Type	LED Farbe LED Colour	Art. Nr.
L1	3 x rot 3 x red	**1276.1203**
L2	3 x gelb 3 x yellow	**1276.1703**
L3	3 x grün 3 x green	**1276.1803**

incl. LED

Layoutvorschlag

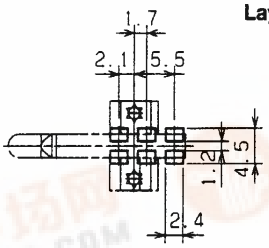

找PDF 维库一下 pdf.dzsc.com

MENTOR

查询"1276.1003"供应商

STAR LED®

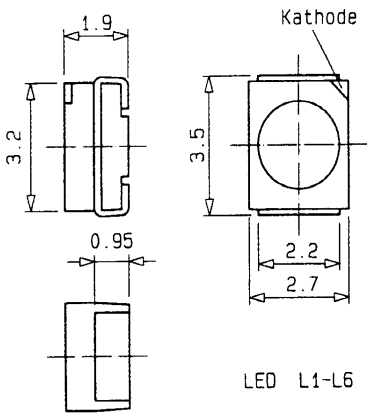

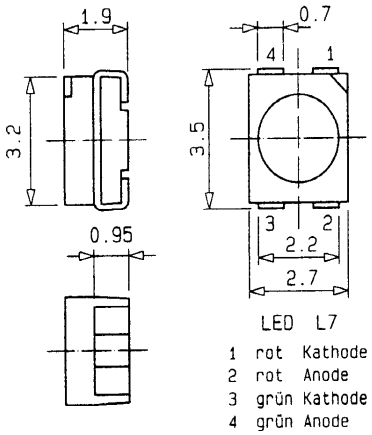

LED Type	Farbe Colour	Artikel-Nr.
L1	rot/red	1200.1002
L2	gelb/yellow	1200.1007
L3	grün/green	1200.1008
L4	rot/red	1200.1012
L5	gelb/yellow	1200.1017
L6	grün/green	1200.1018
L7	rot/grün red/green	1200.1028

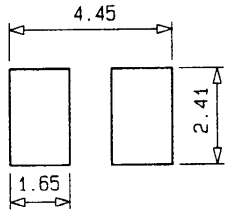

Layoutvorschlag

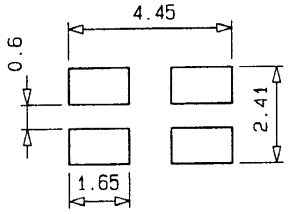

Layoutvorschlag

Vollautomatisch bestückbar **Fully automatic insertion**

Package dimensions of tape and reel

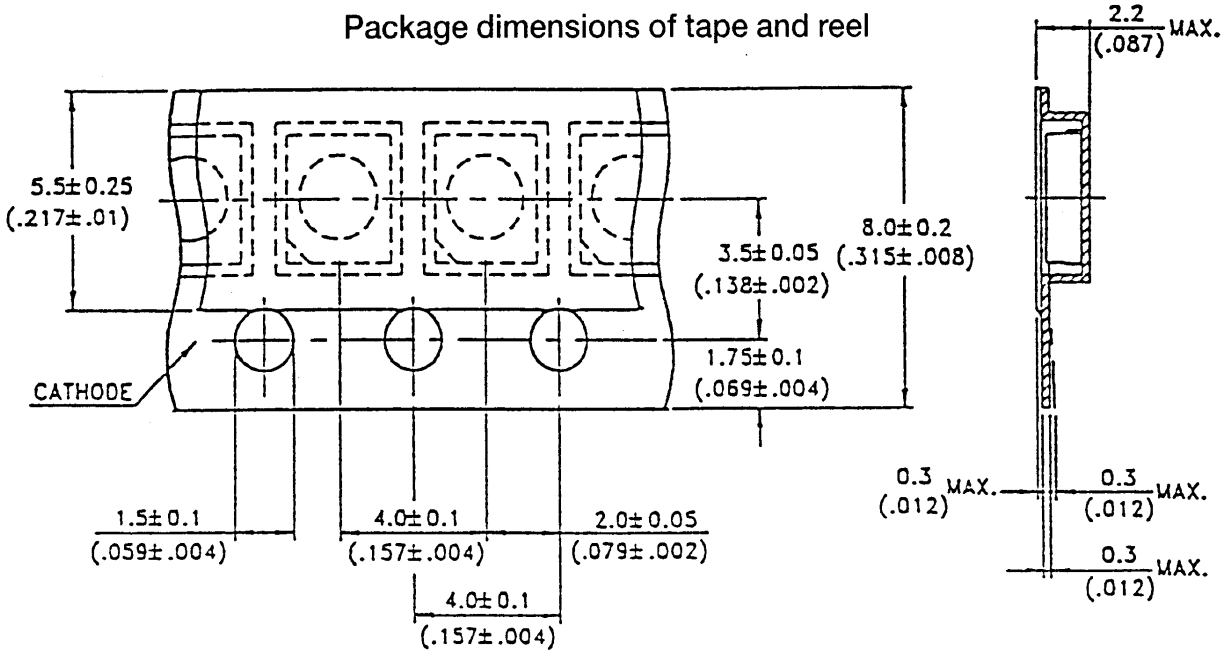

STAR LED®

查询"1276.1003"供应商

MENTOR

LED-Type		Colour Wavelength		Lense Colour	Forward Voltage U_F (V) I_F = 20 mA		Fwd.-Current I_F max. (mA)	⌀φ (50 % I_V)	Luminous Intensity I_V (mcd) I_f = 10/*2 mA **20 mA			Peak Fwd.-Curr. I_{FS} (A)	Rev. Voltage U_R (V)
			λ (nm)		typ	max		Grad./Deg.	min	typ	max	tp ≤ 10 µs	
L	1	rot	635	water clear	2,0	2,8	40	±60	4	-	12	0,2	5
	2	gelb	585		2,1	2,8	30		4	-	12	0,1	5
	3	grün	565		2,1	2,8	20		4	-	12	0,1	5
	4	rot	635		2,0	2,8	40		0,18*	0,8*	-	0,2	5
	5	gelb	585		2,1	2,8	30		0,18*	0,8*	-	0,1	5
	6	grün	565		2,1	2,8	30		0,18*	0,8*	-	0,1	5
	7	rot/grün	630/565		2,0	2,8	30		3,7**	15**		0,1	5

Operating Temperature Range	-55°C to +100°C
Storage Temperature Range	-55°C to +100°C
Infrared Soldering Condition	265°C for 5 seconds
Vapor Phase Soldering Condition	215°C for 3 minutes

Typical electric/optical characteristics curves
(25°C Ambient temperature unless otherwise noted)

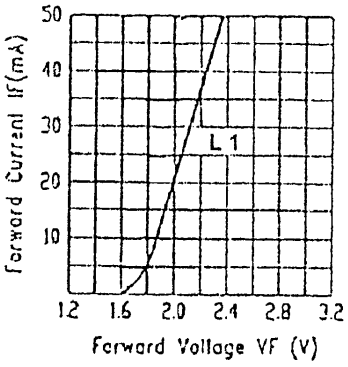

Fig.2 FORWARD CURRENT VS. FORWARD VOLTAGE

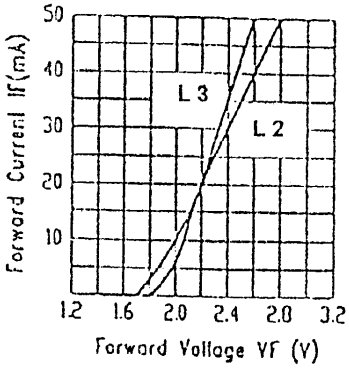

Fig.3 FORWARD CURRENT VS. FORWARD VOLTAGE

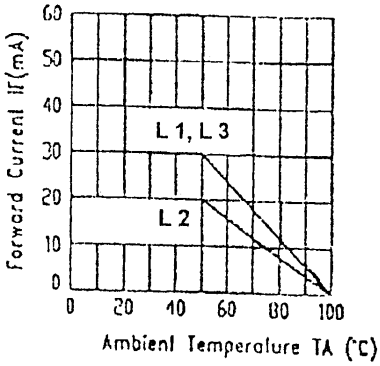

Fig.4 FORWARD CURRENT DERATING CURVE

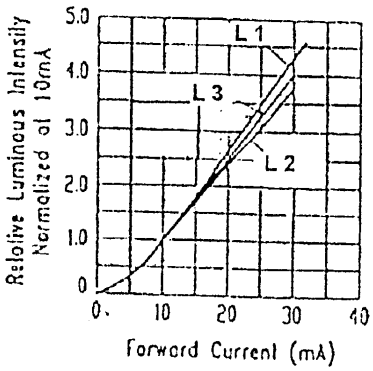

Fig.6 RELATIVE LUMINOUS INTENSITY VS. FORWARD CURRENT

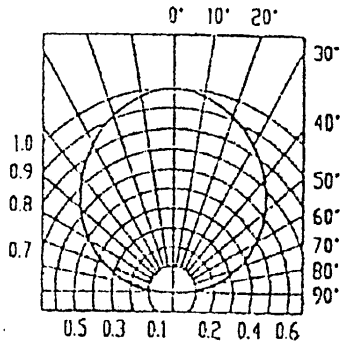

Fig.7 SPATIAL DISTRIBUTION