查询"HMC-C056"供应商

Hittite MICROWAVE CORPORATION

v01.0909

RoHS EARTH FRIENDLY

HMC-C056

GaAs MMIC x2 ACTIVE FREQUENCY MULTIPLIER MODULE, 8 - 21 GHz OUTPUT

Typical Applications

The HMC-C056 is suitable for:

- Clock Generation Applications: SOWET OC-192 & SDH STM-64
- Point-to-Point & VSAT Radios
- Test Instrumentation
- Military EW/Radar
- Space

Features

High Output Power: +14 dBm

Low Input Power Drive: 0 to +10 dBm

100 kHz SSB Phase Noise: -142 dBc/Hz

Fo Isolation 16 dBc @ Fout = 15 GHz

Hermetically Sealed Module

Field Replaceable 2.92mm Connectors

-55° to +85°C Operating Temperature

Functional Diagram

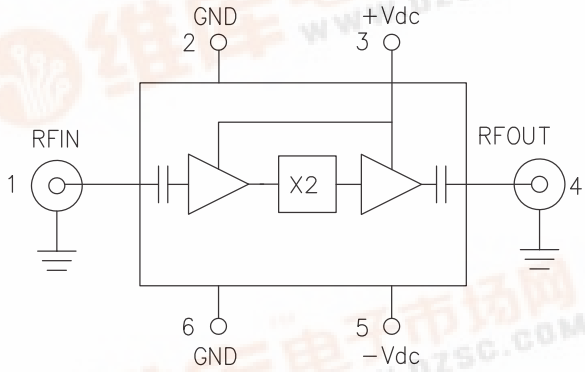

General Description

The HMC-C056 is a x2 active broadband frequency multiplier utilizing GaAs PHEMT technology in a miniature hermetic module. When driven by a 6 dBm signal, the multiplier provides +14 dBm typical output power from 8 - 21 GHz. The Fo isolation is 16 dBc @ 15 GHz with respect to output signal level. This frequency multiplier features DC blocked I/O's, and is ideal for use in LO multiplier chains for Pt to Pt & VSAT Radios yielding reduced parts count vs. traditional approaches. The low additive SSB Phase Noise of -142 dBc/Hz at 100 kHz offset helps maintain good system noise performance.

Electrical Specifications, T_A = +25° C, +Vdc = +12V, -Vdc = -5V, RF Input Power = 6 dBm

Parameter	Min.	Typ.	Max.	Units
Frequency Range, Input		4 - 10.5		GHz
Frequency Range, Output		8 - 21		GHz
Output Power, fout = 10 to 20 GHz	10	14		dBm
Fo Isolation (with respect to output level)		16		dBc
Input Return Loss		14		dB
Output Return Loss		10		dB
SSB Phase Noise (100 kHz Offset)		-142		dBc/Hz
Positive Supply Current		102		mA
Negative Supply Current		5		mA

For price, delivery, and to place orders, please contact Hittite Microwave Corporation:
20 Alpha Road Chelmsford, MA 01824 Phone: 978-250-3343 Fax: 978-250-3373
Order Online at www.hittite.com

找PDF 维库一下 pdf.dzsc.com

查询"HMC-C056"供应商

RoHS EARTH FRIENDLY

Output Power vs. Temperature @ 6 dBm Drive Level

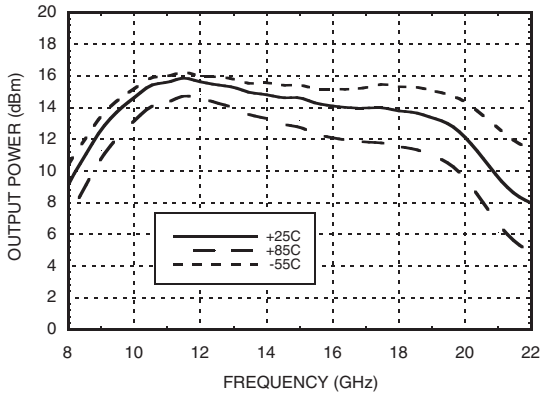

Output Power vs. Drive Level

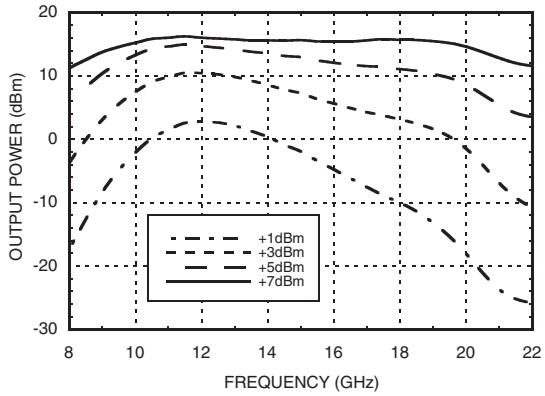

Output Power vs. Input Power

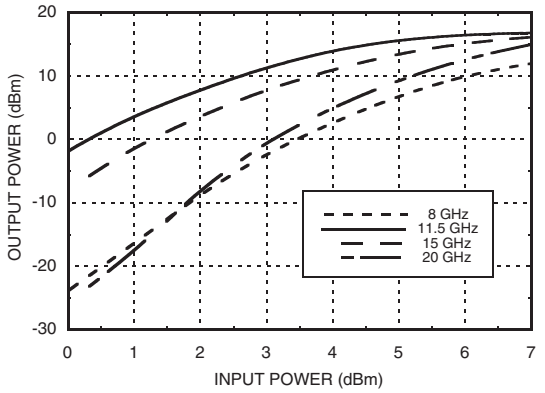

Isolation @ 6 dBm Drive Level

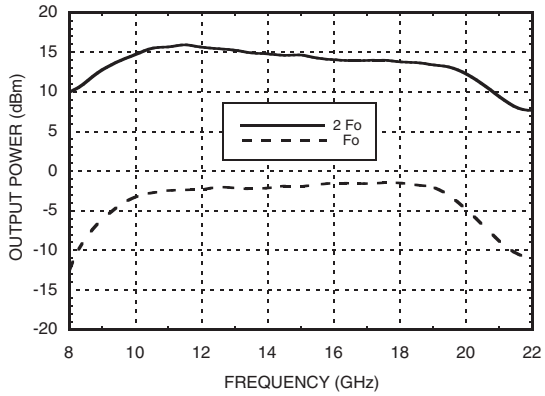

SSB Phase Noise Performance Fout = 15 GHz, Input Power = 6 dBm

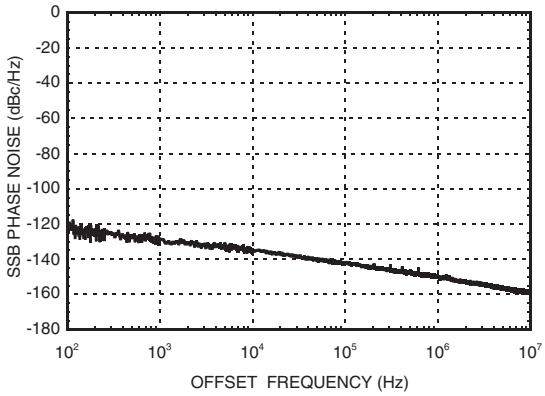

查询"HMC-C056"供应商

Input Return Loss vs. Temperature @ 0 dBm Drive Level

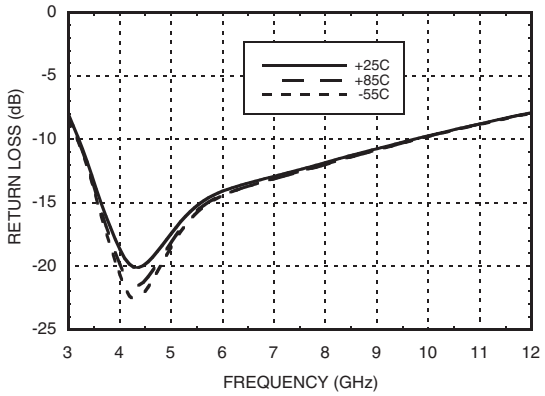

Output Return Loss vs. Temperature @ 0 dBm Drive Level

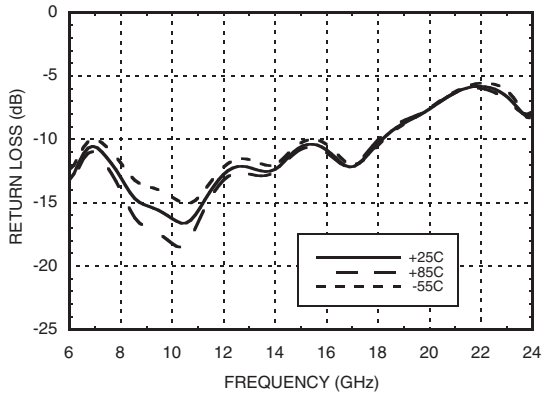

Absolute Maximum Ratings

RF Input (Vdc = +5V)	+13 dBm
Bias Supply Voltage (+Vdc / -Vdc)	+15V / -15V
Storage Temperature	-65 to +150 °C
Operating Temperature	-55 to +85 °C

ELECTROSTATIC SENSITIVE DEVICE
OBSERVE HANDLING PRECAUTIONS

Pin Description

Pin Number	Function	Description	Interface Schematic
1	RFIN and RF Ground	Pin is AC coupled and matched to 50 Ohms. RFIN uses a female 2.92mm field replaceable connector.	RFIN
2, 6	GND	One of these pins must be connected to power supply ground.	GND
3	+Vdc	Positive power supply voltage for the multiplier includes a linear regulator.	REGULATOR +Vdc
4	RFOUT and RF Ground	Pin is AC coupled and matched to 50 Ohms. RFOUT uses a female 2.92mm field replaceable connector.	RFOUT
5	-Vdc	Negative power supply voltage for the multiplier includes a linear regulator.	REGULATOR −Vdc

查询"HMC-C056"供应商

Outline Drawing

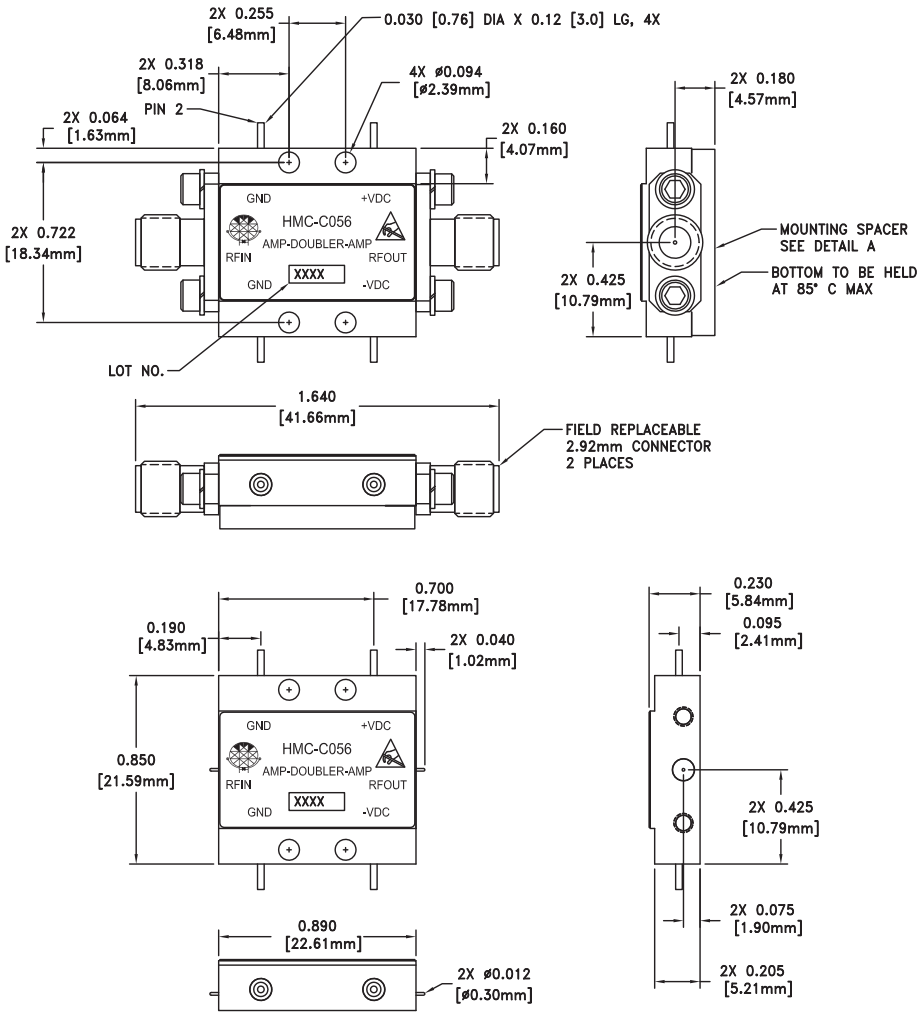

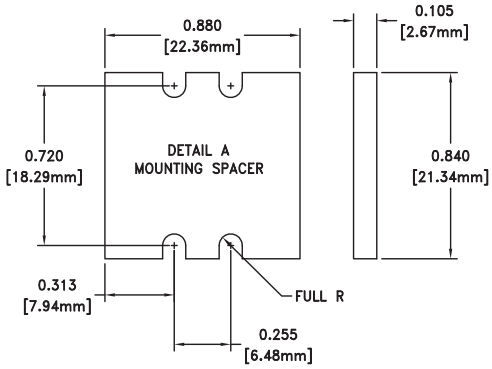

NOTES:

1. PACKAGE, LEADS, COVER MATERIAL: KOVAR
2. PLATING: ELECTROLYTIC GOLD 50 MICROINCHES MIN., OVER ELECTROLYTIC NICKEL 75 MICROINCHES MIN.
3. MOUNTING SPACER: NICKEL PLATED ALUMINUM
4. ALL DIMENSIONS ARE IN INCHES [MILLIMETERS]
5. TOLERANCES: 0.010 [0.25] UNLESS OTHERWISE SPECIFIED

Package Information

Package Type	C-10
Package Weight [1]	18.7 gms [2]
Spacer Weight	3.3 gms [2]

[1] Includes the connectors

[2] ±1 gms Tolerance

查询"HMC-C066"供应商

This datasheet has been downloaded from:

www.EEworld.com.cn

Free Download

Daily Updated Database

100% Free Datasheet Search Site

100% Free IC Replacement Search Site

Convenient Electronic Dictionary

Fast Search System

www.EEworld.com.cn

All Datasheets Cannot Be Modified Without Permission

Copyright © Each Manufacturing Company