Ordering number : ENA0371A

查询"LA5647H"供应商

SANYO Semiconductors

DATA SHEET

LA5647H — Monolithic Linear IC For Car AV Equipment Multifunction Multi-Voltage Power Supply

Overview

The LA5647H power supply IC provides a set of functions optimal for car audio applications. These functions include regulators, emitter-follower outputs, open-collector outputs, and a reset function.

Features

- 5V/50mA regulator (always on, with reverse current flow prevention function).
- 10V/2000mA regulator (when used with an external 2SB921 PNP transistor) with standby function (on/off control).
- Regulators (four for 8V systems and one 5V system) with on/off functions controlled by a shift resister/latch function. This IC also provides four open-collector output systems and two emitter-follower type output systems.
- Full complement of built-in protection circuits.
  1) Overcurrent protection for each V_O except the open collector outputs.
  2) Thermal protection for each V_O except the V_{DD}5V output.

Specifications

Absolute Maximum Ratings at Ta = 25°C

Parameter	Symbol	Conditions	Ratings	Unit
Supply voltage	V_{CC} max		24	V
Allowable power dissipation	Pd max	Ta ≤ 25°C, Independent IC	0.82	W
		Ta ≤ 25°C, Mounted substrate *	2.01	W
Thermal junction to ambient air thermal resistance	θj-a		152.4	°C/W
Operating temperature	Topr		-30 to +85	°C
Storage temperature	Tstg		-55 to +150	°C

* Mounted substrate : 114.3mm×76.1mm×1.6mm, glass epoxy board.

■ Any and all SANYO Semiconductor Co.,Ltd. products described or contained herein are, with regard to "standard application", intended for the use as general electronics equipment (home appliances, AV equipment, communication device, office equipment, industrial equipment etc.). The products mentioned herein shall not be intended for use for any "special application" (medical equipment whose purpose is to sustain life, aerospace instrument, nuclear control device, burning appliances, transportation machine, traffic signal system, safety equipment etc.) that shall require extremely high level of reliability and can directly threaten human lives in case of failure or malfunction of the product or may cause harm to human bodies, nor shall they grant any guarantee thereof. If you should intend to use our products for applications outside the standard applications of our customer who is considering such use and/or outside the scope of our intended standard applications, please consult with us prior to the intended use. If there is no consultation or inquiry before the intended use, our customer shall be solely responsible for the use.

■ Specifications of any and all SANYO Semiconductor Co.,Ltd. products described or contained herein stipulate the performance, characteristics, and functions of the described products in the independent state, and are not guarantees of the performance, characteristics, and functions of the described products as mounted in the customer's products or equipment. To verify symptoms and states that cannot be evaluated in an independent device, the customer should always evaluate and test devices mounted in the customer's products or equipment.

SANYO Semiconductor Co., Ltd.
TOKYO OFFICE Tokyo Bldg., 1-10, 1 Chome, Ueno, Taito-ku, TOKYO, 110-8534 JAPAN

Recommended Operating Condition at Ta = 25°C

查询"LA5647H"供应商

Parameter	Symbol	Conditions	Ratings	Unit
Supply voltage	V_{CC}	V_{DD}5V output, normal operating mode	6 to 18	V
		COM10V output, normal operating mode	10.3 to 18	V
Standby input voltage	V_{ST} OFF	Output off, control voltage	0 to 1.5	V
	V_{ST} ON	Output on, control voltage	3.5 to 5	V
V_{DD}5V output current	I_O1		0 to 50	mA
COM10V output current	I_O2	Within the external transistor ASO		mA
COM8V output current	I_O3		0 to 100	mA
TAPE8V output current	I_O4		0 to 30	mA
RD8V output current	I_O5		0 to 150	mA
FM8V output current	I_O6		0 to 100	mA
A_{CC}5V output current	I_O7		0 to 100	mA
AMP+B output current	I_O9		0 to 100	mA
ANT+B output current	I_O10		0 to 100	mA
P1 (ILL) output current	I_O11		0 to 10	mA
P2 (LCD) output current	I_O12		0 to 10	mA
P3 (CAP MR) output current	I_O13		0 to 10	mA
P4 (RSV) output current	I_O14		0 to 10	mA

Electrical Characteristics at Ta = 25°C, in the specified test circuit

Parameter	Symbol	Conditions	Ratings			Unit
			min	typ	max	
No load state [V_{CC} = 13.2V, each output I_O = 0A]						
Current drain 1	I_Q1	V_{STBY} = 0V		200	250	μA
Current drain 2	I_Q2	V_{STBY} = 5V		12	40	mA
V_{DD}5V output [V_{CC} = 13.2V, V_{STBY} = 0V, I_O1 = 50mA]						
Output voltage	V_O1		4.75	5	5.25	V
Dropout voltage	$V_{DROP}1$	V_{CC} = 4.75V		1.0	1.4	V
Line regulation	$\Delta V_O LN1$	6.7V ≤ V_{CC} ≤ 18V		10	30	mV
Load regulation	$\Delta V_O LD$	0 ≤ I_O1 ≤ 50mA		50	100	mV
Peak output current	$I_{OP}1$		50			mA
Output shorted current (for reference purposes)	$I_O SC1$			100		mA
Ripple rejection	$P_{REJ}1$	f = 120Hz, 7V ≤ V_{CC} ≤ 18V	50	56		dB
Output pin leakage current	$I_O LEAK$	V_{CC} = 0V, V_O = 6V		0.001	2	μA
Output voltage difference 1	$\Delta V_O DEF1$	Between V_{DD}5V and A_{CC}5V, (V_O1-V_O7) I_O7 = 100mA	0	0.1	0.285	V
Reset block [V_{CC} = 13.2V]						
Reset threshold voltage	V_{RT}	V_{RST} OUT : Lo → Hi	1.21	1.25	1.30	V
Reset threshold hysteresis voltage	V_{RTH}		25	50	80	mV
COM10V output [V_{CC} = 13.2V, V_{STBY} = 5V, I_O2 = 2A]						
Output voltage	V_O2	With an external 2SB921 Transistor	9.5	10	10.5	V
Dropout voltage	$V_{DROP}2$	V_{CC} = 9.5V		0.3	0.6	V
Line regulation	$\Delta V_O LN2$	11.2V ≤ V_{CC} ≤ 18V		30	300	mV
Load regulation	$\Delta V_O LD2$	0 ≤ I_O2 ≤ 2A		200	800	mV
Control input current	I_{CONT}				20	mA
Output off voltage	V_O2 OFF				0.2	V
Ripple rejection (for reference purposes)	$R_{REJ}2$	C_{CN} = 1μF, f = 120Hz, 11.2V ≤ V_{CC} ≤ 18V		70		dB

Continued on next page.

Continued from preceding page.

查询"LA5647H"供应商

Parameter	Symbol	Conditions	Ratings			Unit
			min	typ	max	
COM8V output [V_{CC} = 13.2V, V_{STBY} = 5V, I_O3 = 100mA]						
Output voltage	V_O3		7.6	8	8.4	V
Dropout voltage	$V_{DROP}3$	V_O2 = 7.6V		1.0	1.4	V
Line regulation	ΔV_OLN3	9.9V ≤ V_{CC} ≤ 18V		50	75	mV
Load regulation	ΔV_OLD3	0 ≤ I_O3 ≤ 100mA		100	150	mV
Peak output current	I_OP3		100			mA
Output shorted current (for reference purposes)	I_OSC3			230		mA
Output off voltage	V_O3 OFF				0.2	V
TAPE8V output [V_{CC} = 13.2V, V_{STBY} = 5V, I_O4 = 30mA]						
Output voltage	V_O4		7.6	8	8.4	V
Dropout voltage	$V_{DROP}4$	V_O2 = 7.6V		1.0	1.4	V
Line regulation	ΔV_OLN4	9.9V ≤ V_{CC} ≤ 18V		50	75	mV
Load regulation	ΔV_OLD4	0 ≤ I_O4 ≤ 30mA		100	150	mV
Peak output current	I_OP3		30			mA
Output shorted current (for reference purposes)	I_OSC4			60		mA
Output off voltage	V_O4 OFF				0.2	V
RD8V output [V_{CC} = 13.2V, V_{STBY} = 5V, I_O5 = 150mA]						
Output voltage	V_O5		7.6	8	8.4	V
Dropout voltage	$V_{DROP}5$	V_O2 = 7.6V		1.0	1.4	V
Line regulation	ΔV_OLN5	9.9V ≤ V_{CC} ≤ 18V		50	75	mV
Load regulation	ΔV_OLD5	0 ≤ I_O5 ≤ 150mA		100	150	mV
Peak output current	I_OP5		150			mA
Output shorted current (for reference purposes)	I_OSC5			320		mA
Output off voltage	V_O5 OFF				0.2	V
FM8V output [V_{CC} = 13.2V, V_{STBY} = 5V, I_O6 = 100mA]						
Output voltage	V_O6		7.6	8	8.4	V
Dropout voltage	$V_{DROP}6$	V_O2 = 7.6V		1.0	1.4	V
Line regulation	ΔV_OLN6	9.9V ≤ V_{CC} ≤ 18V		50	75	mV
Load regulation	ΔV_OLD6	0 ≤ I_O6 ≤ 100mA		100	150	mV
Peak output current	I_OP6		100			mA
Output shorted current (for reference purposes)	I_OSC6			230		mA
Output off voltage	V_O6 OFF				0.2	V
Output voltage difference 2	ΔV_ODEF2	Between RD8V and FM8V, I_O5 = 150mA			0.3	V
A_{CC}5V output [V_{CC} = 13.2V, V_{STBY} = 5V, I_O7 = 100mA]						
Output voltage	V_O7		4.65	4.9	5.15	V
Dropout voltage	$V_{DROP}7$	V_O2 = 4.65V		1.0	1.4	V
Line regulation	ΔV_OLN7	6.6V ≤ V_{CC} ≤ 18V		50	75	mV
Load regulation	ΔV_OLD7	0 ≤ I_O7 ≤ 100mA		100	150	mV
Peak output current	I_OP7		100			mA
Output shorted current (for reference purposes)	I_OSC7			220		mA
Output off voltage	V_O7 OFF				0.2	V
AMP+B output [V_{CC} = 13.2V, V_{STBY} = 5V, I_O9 = 100mA]						
Output voltage	V_O9		11.7	12.2		V
Dropout voltage	$V_{DROP}9$			1	1.5	V
Peak output current	I_OP9		100			mA
Output shorted current (for reference purposes)	I_OSC9			170		mA
Output off voltage	V_O9 OFF				0.2	V

Continued on next page.

Continued from preceding page.

查询"LA5647H"供应商

Parameter	Symbol	Conditions	Ratings			Unit
			min	typ	max	
ANT+B output [V_{CC} = 13.2V, V_{STBY} = 5V, I_O10 = 100mA]						
Output voltage	V_O10		11.7	12.2		V
Dropout voltage	$V_{DROP}10$			1	1.5	V
Peak output current	I_OP10		100			mA
Output shorted current (for reference purposes)	I_OSC10			170		mA
Output off voltage	V_O10 OFF				0.2	V
P1 (ILL) output [V_{CC} = 13.2V, V_{STBY} = 5V, I_O11 = 10mA]						
Dropout voltage	$V_{DROP}11$			0.4	0.8	V
Sink output current	I_O11		10			mA
P2 (LCD) output [V_{CC} = 13.2V, V_{STBY} = 5V, I_O12 = 10mA]						
Dropout voltage	$V_{DROP}12$			0.4	0.8	V
Sink output current	I_O11		10			mA
P3 (CAP MR) output [V_{CC} = 13.2V, V_{STBY} = 5V, I_O13 = 10mA]						
Dropout voltage	$V_{DROP}13$			0.4	0.8	V
Sink output current	I_O13		10			mA
P4 (RSV) output [V_{CC} = 13.2V, V_{STBY} = 5V, I_O14 = 10mA]						
Dropout voltage	$V_{DROP}14$			0.4	0.8	V
Sink output current	I_O14		10			mA
Overheat protection						
Operating temperature*	TSD	V_O2 (COM10V) operation V_O3 to V_O14 interlocked to V_O2	150	175		°C

Note) * for overheat protection indicates the design target value and not the measured value.

Package Dimensions

unit : mm (typ)

3234B

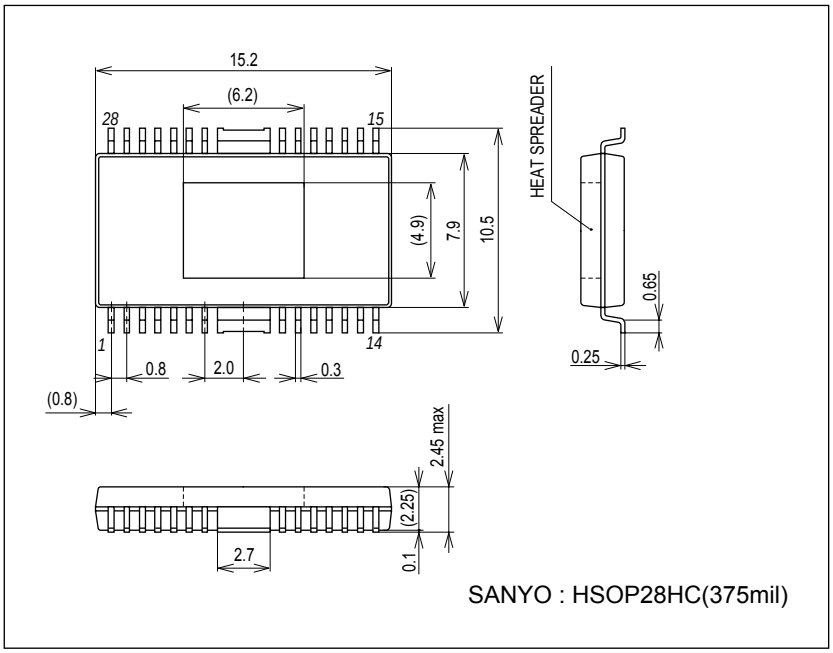

Pin Assignment

查询"LA5647H"供应商

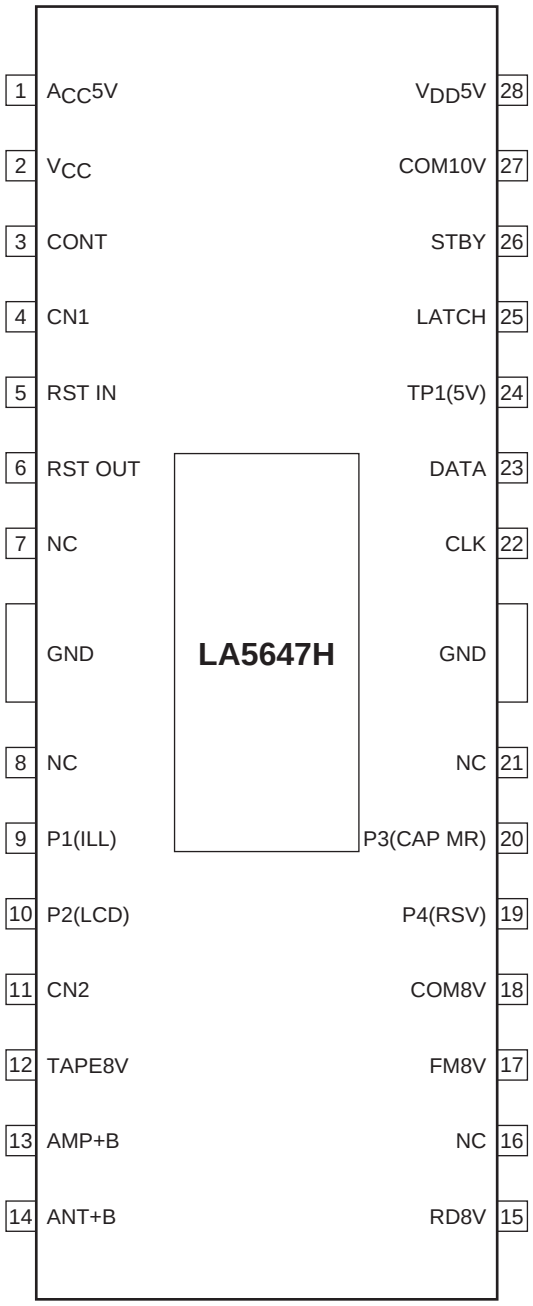

Top view

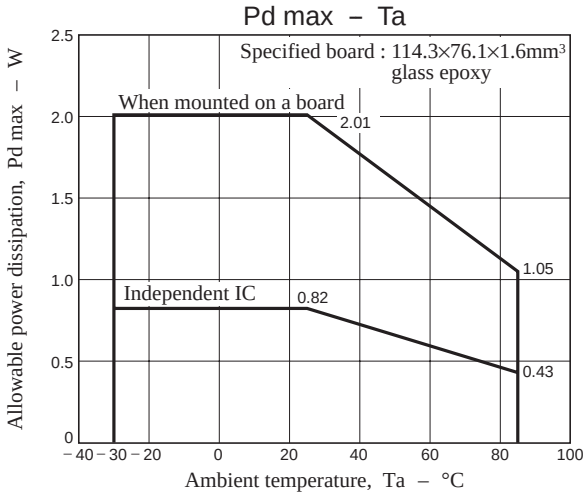

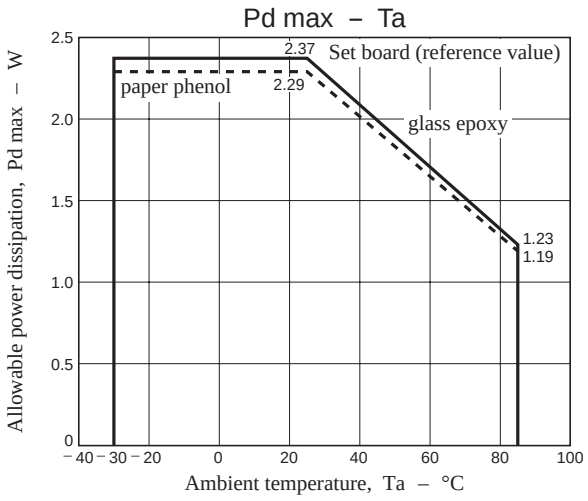

Block Diagram

查询"LA5647H"供应商

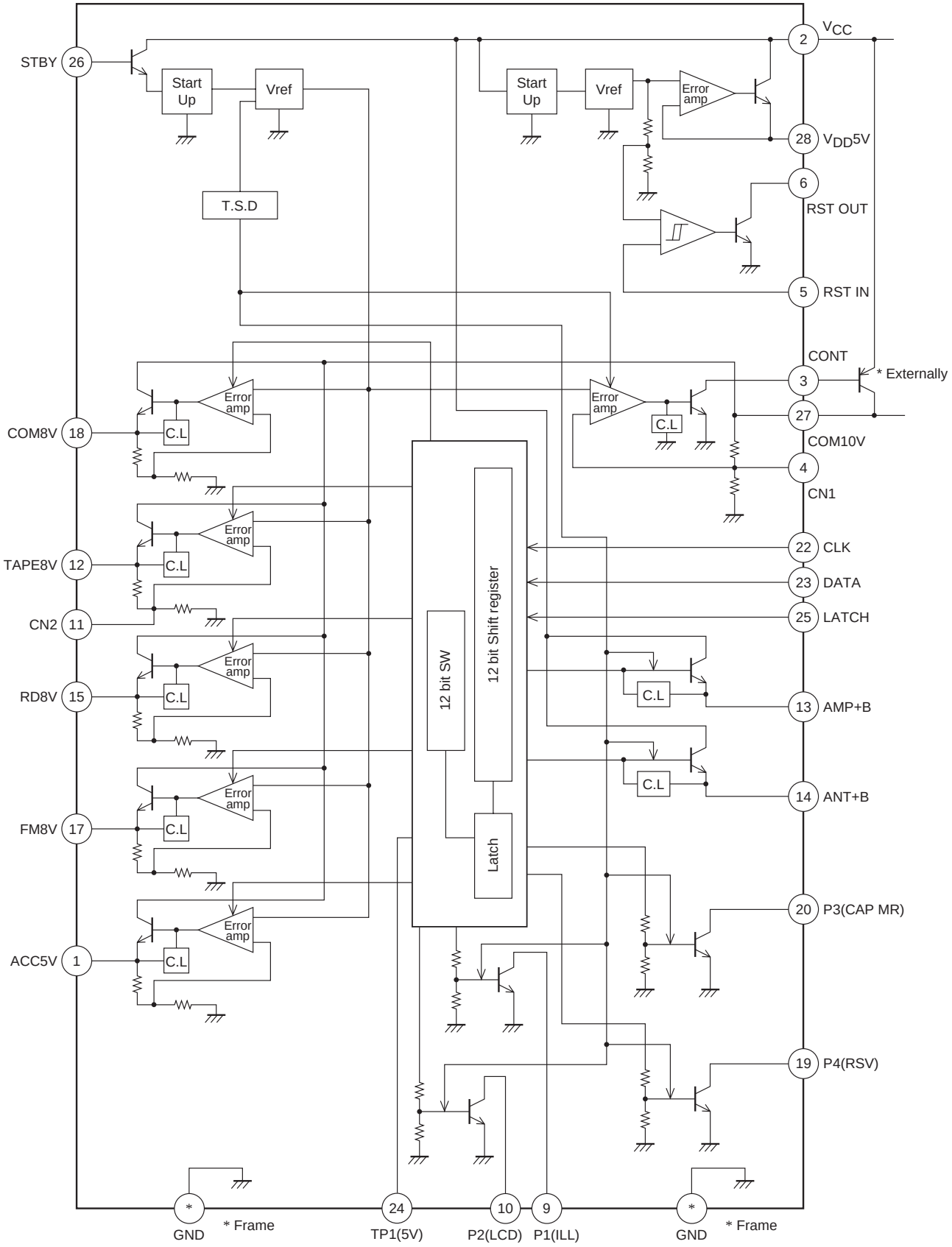

* External PNPTr is 2SB921 or equivalent under application.

Pin Functions

查询"LA5647H"供应商

Pin No.	Functions	Description	Equivalent Circuit
1 11 12 15 17 18	4.9V 100mA (ACC 5V) CN2 8V 30mA (TAPE 8V) 8V 150mA (RD 8V) 8V 100mA (FM 8V) 8V 100mA (COM 8V)	• Stabilized 5V system and 8V system power supply outputs • The on/off state of CD5V is controlled by STBY and other systems by the serial data, respectively. Application examples Pin 1 : ACC5V, digital 5V Pin 11 : Insert a capacitor of about 10µF between this pin and pin 12 to improve the TAPE8V ripple rejection. This pin controls the pin 12 output voltage. Set this pin to about 7V by inserting a resistor between this pin and ground if impulse noise from the Dolby IC occurs in cranking mode. Pin 12 : TAPE8V Pin 15 : 9 pro V_{CC} as 9 RD 8V Pin 17 : FM8V power supply for use with a band switch Pin 18 : COM8V power supply for an electronic volume/tone control circuit. * : Note that total of Pd must not exceed the rating of the IC.	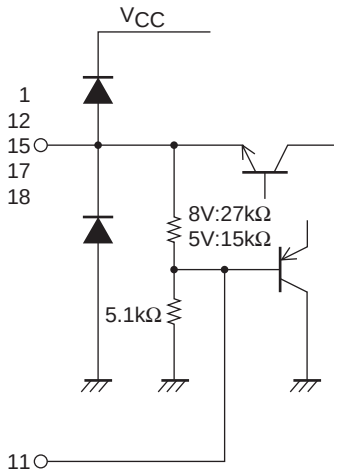 Only applies to the pin 12 output block
2 3 4 27	V_{CC} CONT CN1 COM10V	Pin 2 : Power supply * : This pin must be at the same voltage level as the emitter of the external transistor. Pin 3 : Bias for the external Transistor. The maximum sink current is 20mA. Pin 4 : Ripple rejection for each of the power supply systems. To increase the rejection capacity, insert a 1µF capacitor between this pin and pin 27. This pin controls the COM10V output voltage. The voltage is set to 10V internally. Pin 27 : The 10V power supply used for CD power, tuner VT, cassette loading, LCD, and ILL illumination. • Used as the power supply for internal 8V and 5V (except V_{DD}5V) systems. • The output voltage can be controlled with the CN1 pin. • The ripple rejection can be improved at the CN1 pin.	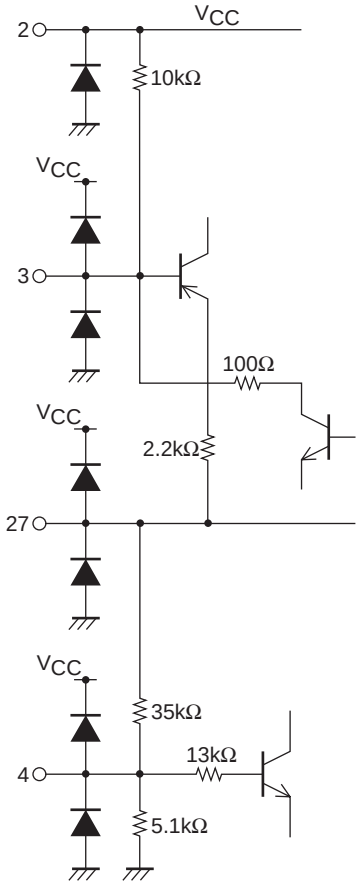
5	RST IN	• Voltage detection input: pin 6 is the corresponding output. • Internal reference voltage : 1.25V, typical. • Used for +B detection, Acc detection, and other purposes by resistor voltage division of the +B level.	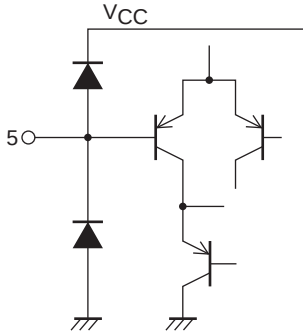

Continued on next page.

Continued from preceding page.

查询"LA5647H"供应商

Pin No.	Functions	Description	Equivalent Circuit
6	RST OUT	• Reset signal output to microcontroller and other circuits.	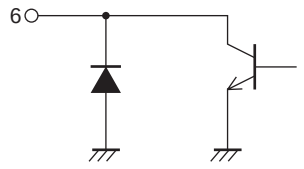
7 8 16 21	NC NC NC NC		
9 10 19 20	P1 (ILL) P2 (LCD) P4 (CAP MR) P3 (RSV)	• The on/off state of these systems is controlled by the serial data. Pin 9 : ILL illumination on/off control Pin 10 : LCD illumination on/off control Pins 19 and 20 : Used for other applications.	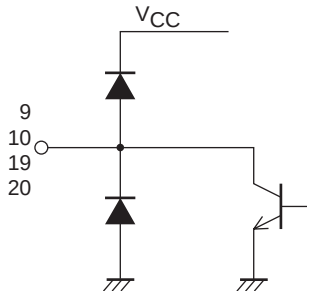
13 14	V_{CC}100mA (AMP+B) V_{CC}100mA (ANT+B)	• V_{CC}-1V unstabilized outputs that can provide 100mA. • The on/off state of these outputs can be controlled with serial data. • Used with the ANT+B and AMP+B systems.	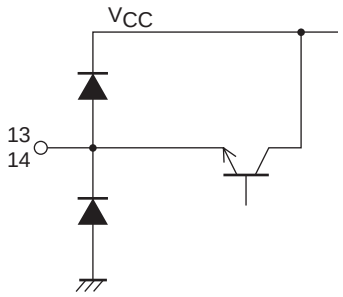
22 23 25	CLK DATA LATCH	• The serial data received over this serial interface controls the outputs other than COM10V, CD5V, and V_{DD}5V. It also controls the on/off state of P1 to P4.	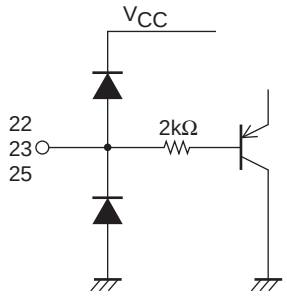
24	TP1 (5V)	• Monitors the power supply used for the internal logic circuits (the CLK, DATA, and LATCH inputs and on/off control).	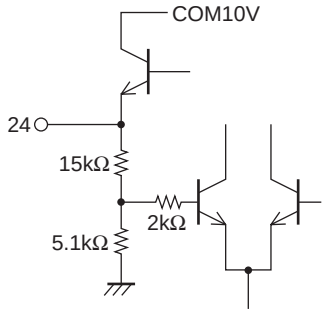

Continued on next page.

Continued from preceding page.

查询"LA5647H"供应商

Pin No.	Functions	Description	Equivalent Circuit
26	STBY	• Controls the running/stopped state of this IC. • When low, only V_{DD}5V operates. All other circuits are stopped. • When high, only COM10V and V_{DD}5V operate unconditionally. All other outputs are controlled by the serial data.	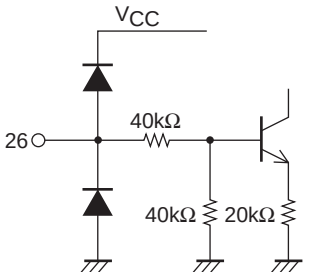
28	V_{DD} 5V	• When +B is applied to the V_{CC}2 pin, 5V is output. • Used as the power supply system for systems, such as the microcontroller, that require memory backup. • IQ = 150 to 180µA • The current flowing into pin 28 when V_{CC} is off, is minimal.	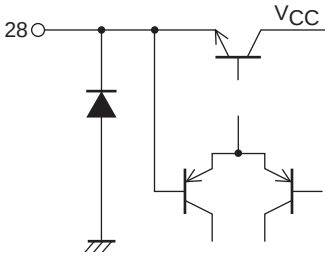
Frame	GND	Connected to the IC substrate (lowest potential)	

Output Timing Chart

查询"LA5647H"供应商

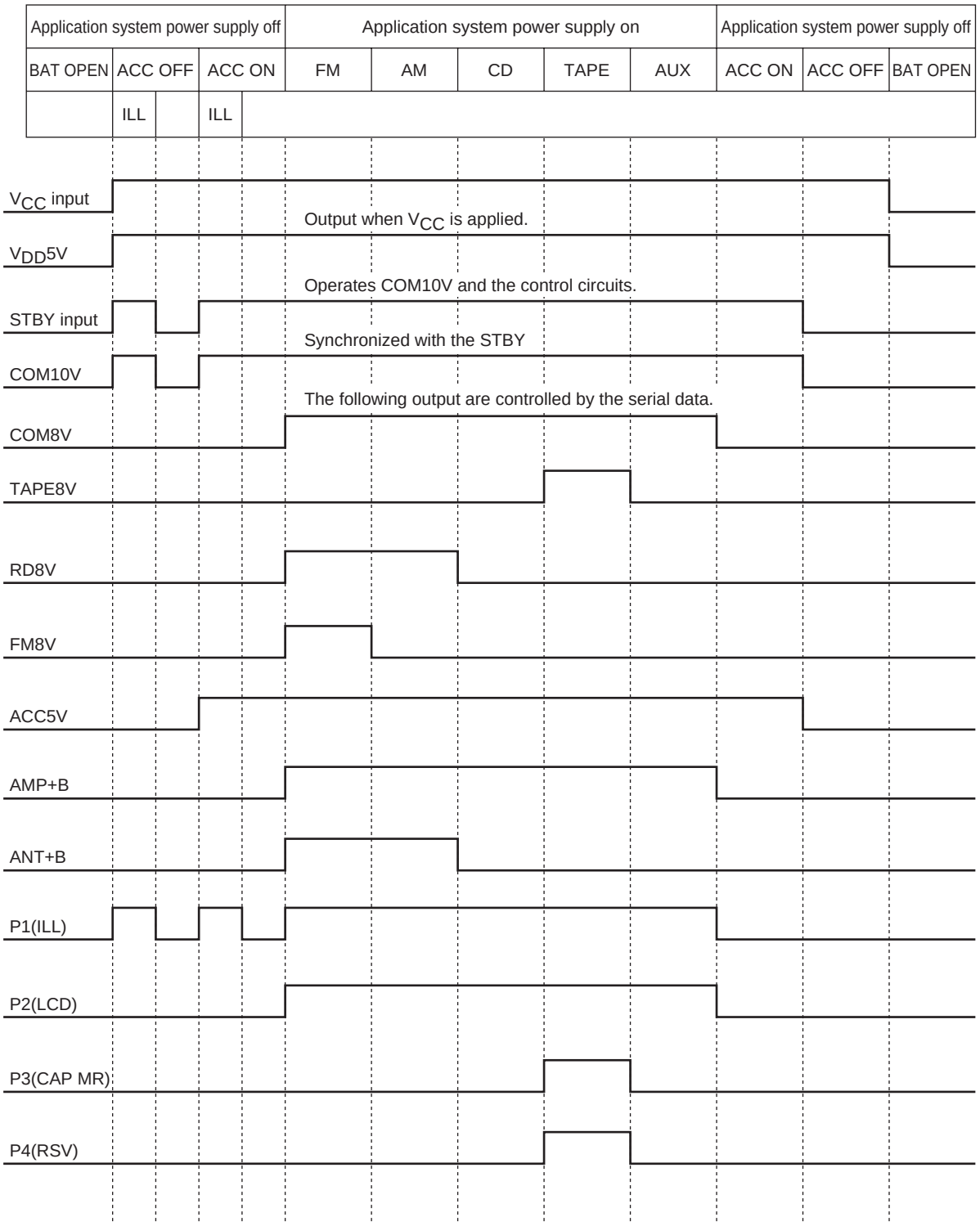

Control Timing and Data Formats

查询"LA5647H"供应商

Input the stipulated data to the CLK, DATA, and LATCH pins to control the outputs other than the V_{DD}5V and COM10V.

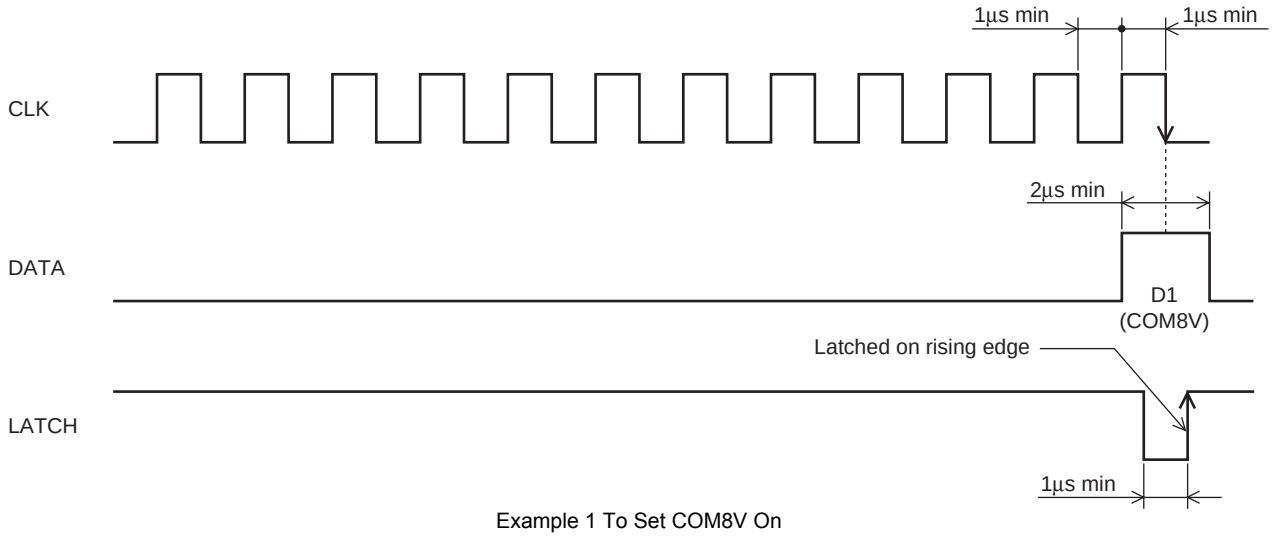

Example 1 To Set COM8V On

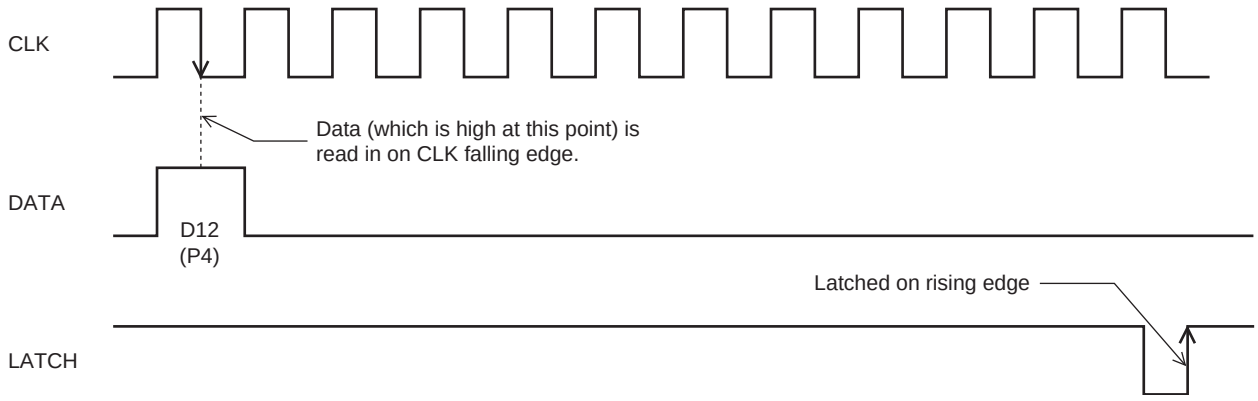

Example 2 To Set P4 On

DATA	D1	D2	D3	D4	D5	D6	D7	D8	D9	D10	D11	D12
Output	COM8V	TAPE8V	RD8V	FM8V	A_{CC}5V	-	AMP+B	ANT+B	P1 (ILL)	P2 (LCD)	P3 (CAPMR)	P4 (RSV)

Specified Test Circuit

查询"LA5647H"供应商

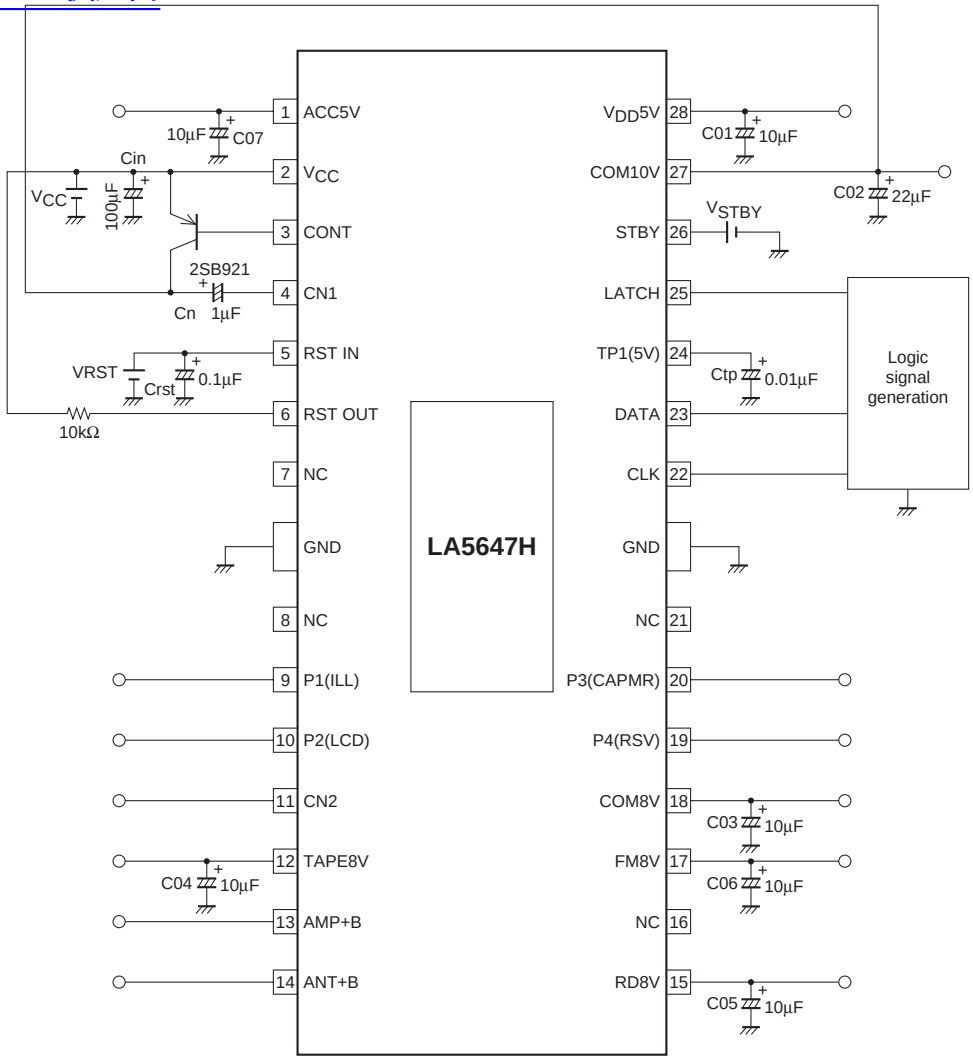

- SANYO Semiconductor Co.,Ltd. assumes no responsibility for equipment failures that result from using products at values that exceed, even momentarily, rated values (such as maximum ratings, operating condition ranges, or other parameters) listed in products specifications of any and all SANYO Semiconductor Co.,Ltd. products described or contained herein.
- SANYO Semiconductor Co.,Ltd. strives to supply high-quality high-reliability products, however, any and all semiconductor products fail or malfunction with some probability. It is possible that these probabilistic failures or malfunction could give rise to accidents or events that could endanger human lives, trouble that could give rise to smoke or fire, or accidents that could cause damage to other property. When designing equipment, adopt safety measures so that these kinds of accidents or events cannot occur. Such measures include but are not limited to protective circuits and error prevention circuits for safe design, redundant design, and structural design.
- In the event that any or all SANYO Semiconductor Co.,Ltd. products described or contained herein are controlled under any of applicable local export control laws and regulations, such products may require the export license from the authorities concerned in accordance with the above law.
- No part of this publication may be reproduced or transmitted in any form or by any means, electronic or mechanical, including photocopying and recording, or any information storage or retrieval system, or otherwise, without the prior written consent of SANYO Semiconductor Co.,Ltd.
- Any and all information described or contained herein are subject to change without notice due to product/technology improvement, etc. When designing equipment, refer to the "Delivery Specification" for the SANYO Semiconductor Co.,Ltd. product that you intend to use.
- Information (including circuit diagrams and circuit parameters) herein is for example only; it is not guaranteed for volume production.
- Upon using the technical information or products described herein, neither warranty nor license shall be granted with regard to intellectual property rights or any other rights of SANYO Semiconductor Co.,Ltd. or any third party. SANYO Semiconductor Co.,Ltd. shall not be liable for any claim or suits with regard to a third party's intellctual property rights which has resulted from the use of the technical information and products mentioned above.

This catalog provides information as of July, 2007. Specifications and information herein are subject to change without notice.