查询"5962-8672601EA"供应商

REVISIONS			
LTR	DESCRIPTION	DATE	APPROVED
A	Change drawing CAGE code to 67268. Page 8, figure 4, dimension t_f and t_r measured from 10% point. Page 8, figure 4, all voltages reading 1.3 V changed to 1.5 V.	19 OCT 1987	RPEvans

CURRENT CAGE CODE 67268

REV																											
PAGE																											
REV STATUS OF PAGES	REV	A								A																	
	PAGES	1	2	3	4	5	6	7	8	9	10																

Defense Electronics Supply Center
Dayton, Ohio

Original date of drawing:
20 March 1987

AMSC N/A

PREPARED BY Monica Grosel

CHECKED BY DA DiCenzo

APPROVED BY MC Hauck

SIZE	CODE IDENT. NO.
A	14933

REV A

MILITARY DRAWING

This drawing is available for use by all Departments and Agencies of the Department of Defense

TITLE: MICROCIRCUIT, DIGITAL, BIPOLAR, 12 INPUT PARITY CHECKER/GENERATOR, MONOLITHIC SILICON

DWG NO. 5962-86726

PAGE 1 OF 10

5962-E593

DISTRIBUTION STATEMENT A. Approved for public release; distribution is unlimited.

DESC FORM 193
MAY 86

Powered by ICminer.com Electronic-Library Service CopyRight 2003

查询"5962-8672601EA"供应商

1. SCOPE

1.1 Scope. This drawing describes device requirements for class B microcircuits in accordance with 1.2.1 of MIL-STD-883, "Provisions for the use of MIL-STD-883 in conjunction with compliant non-JAN devices".

1.2 Part number. The complete part number shall be as shown in the following example:

5962-86726	01	E	X
Drawing number	Device type (1.2.1)	Case outline (1.2.2)	Lead finish per MIL-M-38510

1.2.1 Device type. The device type shall identify the circuit function as follows:

Device type	Generic number	Circuit function
01	93S48	12 input parity checker/generator

1.2.2 Case outlines. The case outlines shall be as designated in appendix C of MIL-M-38510, and as follows:

Outline letter	Case outline
E	D-2 (16-lead, 1/4" x 7/8") dual-in-line package
F	F-5 (16-lead, 1/4" x 3/8") flat package

1.3 Absolute maximum ratings.

Supply voltage range	-0.5 V to +7.0 V dc
Input voltage range	-1.5 V to +7.0 V dc
Storage temperature range	-65°C to +150°C
Maximum power dissipation (P_D)	.99 W 1/
Lead temperature (soldering, 10 seconds)	+300°C
Thermal resistance, junction-to-case (θ_{JC}):	
Case E	25°C/W
Case F	20°C/W
Junction temperature (T_J)	+150°C
DC input current	-30 mA to 5.0 mA
DC output current into output	+30 mA

1.4 Recommended operating conditions.

Supply voltage (V_{CC})	+4.5 V to 5.5 V dc maximum
Minimum high level input voltage (V_{IH})	2.0 V dc
Maximum low level input voltage (V_{IL})	0.8 V dc
Ambient operating temperature range (T_A)	-55°C to +125°C

1/ Must withstand the added P_D due to short circuit test (e.g., I_{OS}).

Powered by ICminer.com Electronic-Library Service CopyRight 2003

查询"5962-8672601EA"供应商

2. APPLICABLE DOCUMENTS

2.1 Government specification and standard. Unless otherwise specified, the following specification and standard, of the issue listed in that issue of the Department of Defense Index of Specifications and Standards specified in the solicitation, form a part of this drawing to the extent specified herein.

SPECIFICATION

MILITARY

MIL-M-38510 - Microcircuits, General Specification for.

STANDARD

MILITARY

MIL-STD-883 - Test Methods and Procedures for Microelectronics.

(Copies of the specification and standard required by manufacturers in connection with specific acquisition functions should be obtained from the contracting activity or as directed by the contracting activity.)

2.2 Order of precedence. In the event of a conflict between the text of this drawing and the references cited herein, the text of this drawing shall take precedence.

3. REQUIREMENTS

3.1 Item requirements. The individual item requirements shall be in accordance with 1.2.1 of MIL-STD-883, "Provisions for the use of MIL-STD-883 in conjunction with compliant non-JAN devices" and as specified herein.

3.2 Design, construction, and physical dimensions. The design, construction, and physical dimensions shall be as specified in MIL-M-38510 and herein.

3.2.1 Terminal connections. The terminal connections shall be as specified on figure 1.

3.2.2 Truth table. The truth table shall be as specified on figure 2.

3.2.3 Logic diagram. The logic diagram shall be as specified on figure 3.

3.2.4 Case outlines. The case outlines shall be in accordance with 1.2.2 herein.

3.2.5 Switching waveforms. The switching waveforms shall be as specified on figure 4.

3.3 Electrical performance characteristics. Unless otherwise specified, the electrical performance characteristics are as specified in table I and apply over the full recommended ambient operating temperature range.

3.4 Marking. Marking shall be in accordance with MIL-STD-883 (see 3.1 herein). The part shall be marked with the part number listed in 1.2 herein. In addition, the manufacturer's part number may also be marked as listed in 6.4 herein.

3.5 Certificate of compliance. A certificate of compliance shall be required from a manufacturer in order to be listed as an approved source of supply in 6.4. The certificate of compliance submitted to DESC-ECS prior to listing as an approved source of supply shall state that the manufacturer's product meets the requirements of MIL-STD-883 (see 3.1 herein) and the requirements herein.

3.6 Certificate of conformance. A certificate of conformance as required in MIL-STD-883 (see 3.1 herein) shall be provided with each lot of microcircuits delivered to this drawing.

Powered by ICminer.com Electronic-Library Service CopyRight 2003

查询"5962-8672601EA"供应商

TABLE I. Electrical performance characteristics.

Test	Symbol	Conditions $-55^{\circ}C \leq T_A \leq +125^{\circ}C$		Group A subgroups	Limits Min	Limits Max	Unit
High level output voltage	V_{OH}	V_{CC} = +4.5 V V_{IN} = 2.0 V or 0.8 V I_{OH} = -1 mA		1,2,3	2.5		V
Low level output voltage	V_{OL}	V_{CC} = +4.5 V V_{IN} = 2.0 V or 0.8 V I_{OL} = 20 mA		1,2,3		0.50	V
Input clamp voltage	V_{IC}	V_{CC} = +4.5 V I_{IN} = -18 mA		1,2,3		-1.2	V
High level input current	I_{IH1}	V_{CC} = +5.5 V V_{IN} = 2.7 V		1,2,3		20	µA
	I_{IH2}	V_{CC} = +5.5 V V_{IN} = 5.5 V		1,2,3		1.0	mA
Low level input current	I_{IL}	V_{CC} = +5.5 V V_{IN} = 0.5 V		1,2,3		-0.8	mA
Output short circuit current	I_{OS}	V_{CC} = +5.5 V V_{OUT} = 0 V	1/	1,2,3	-40	-100	mA
Supply current	I_{CC}	V_{CC} = +5.5 V	Both outputs open. All inputs = 4.5 V	1,2,3		80	mA
Functional testing		See 4.3.1c		7,8			
Propagation delay from I0 through I11 to even output	t_{PLH1}	C_L = 15 pF R_L = 280Ω (See figure 4)	2/	9		28	ns
			3/	9,10,11		35	ns
	t_{PHL1}		2/	9		28	ns
			3/	9,10,11		35	ns

See footnotes at end of table.

Powered by ICminer.com Electronic-Library Service CopyRight 2003

查询"5962-8672601EA"供应商

TABLE I. Electrical performance characteristics - Continued.

Test	Symbol	Conditions $-55°C \le T_A \le +125°C$		Group A subgroups	Limits Min	Limits Max	Unit
Propagation delay from I0 through I11 to odd output	t_{PLH2}	C_L = 15 pF R_L = 280Ω (See figure 4)	2/	9		28	ns
			3/	9,10,11		35	ns
	t_{PHL2}		2/	9		28	ns
			3/	9,10,11		35	ns

1/ Not more than one output should be shorted at a time and the duration of the short circuit condition should not exceed 1 second.

2/ V_{CC} = 5.0 V.

3/ V_{CC} = 4.5 V to 5.5 V.

3.7 Notification of change. Notification of change to DESC-ECS shall be required in accordance with MIL-STD-883 (see 3.1 herein).

3.8 Verification and review. DESC, DESC's agent, and the acquiring activity retain the option to review the manufacturer's facility and applicable required documentation. Offshore documentation shall be made available onshore at the option of the reviewer.

4. QUALITY ASSURANCE PROVISIONS

4.1 Sampling and inspection. Sampling and inspection procedures shall be in accordance with section 4 of MIL-M-38510 to the extent specified in MIL-STD-883 (see 3.1 herein).

4.2 Screening. Screening shall be in accordance with method 5004 of MIL-STD-883, and shall be conducted on all devices prior to quality conformance inspection. The following additional criteria shall apply:

a. Burn-in test (method 1015 of MIL-STD-883).

(1) Test condition C or D using the circuit submitted with the certificate of compliance (see 3.5 herein).

(2) T_A = +125°C, minimum.

b. Interim and final electrical test parameters shall be as specified in table II herein, except interim electrical parameter tests prior to burn-in are optional at the discretion of the manufacturer.

4.3 Quality conformance inspection. Quality conformance inspection shall be in accordance with method 5005 of MIL-STD-883 including groups A, B, C, and D inspections. The following additional criteria shall apply.

Powered by ICminer.com Electronic-Library Service CopyRight 2003

查询"5962-8672601EA"供应商

Cases E and F

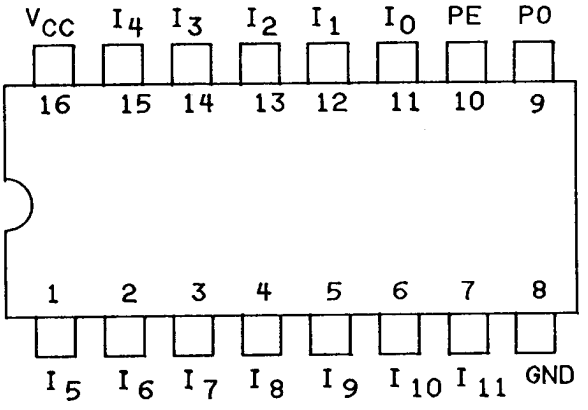

FIGURE 1. Terminal connections.

Number of I inputs		Output	
Low	High	Odd	Even
0	12	L	H
1	11	H	L
2	10	L	H
3	9	H	L
4	8	L	H
5	7	H	L
6	6	L	H
7	5	H	L
8	4	L	H
9	3	H	L
10	2	L	H
11	1	H	L
12	0	L	H

H = High
L = Low

FIGURE 2. Truth table.

Powered by ICminer.com Electronic-Library Service CopyRight 2003

查询"5962-8672601EA"供应商

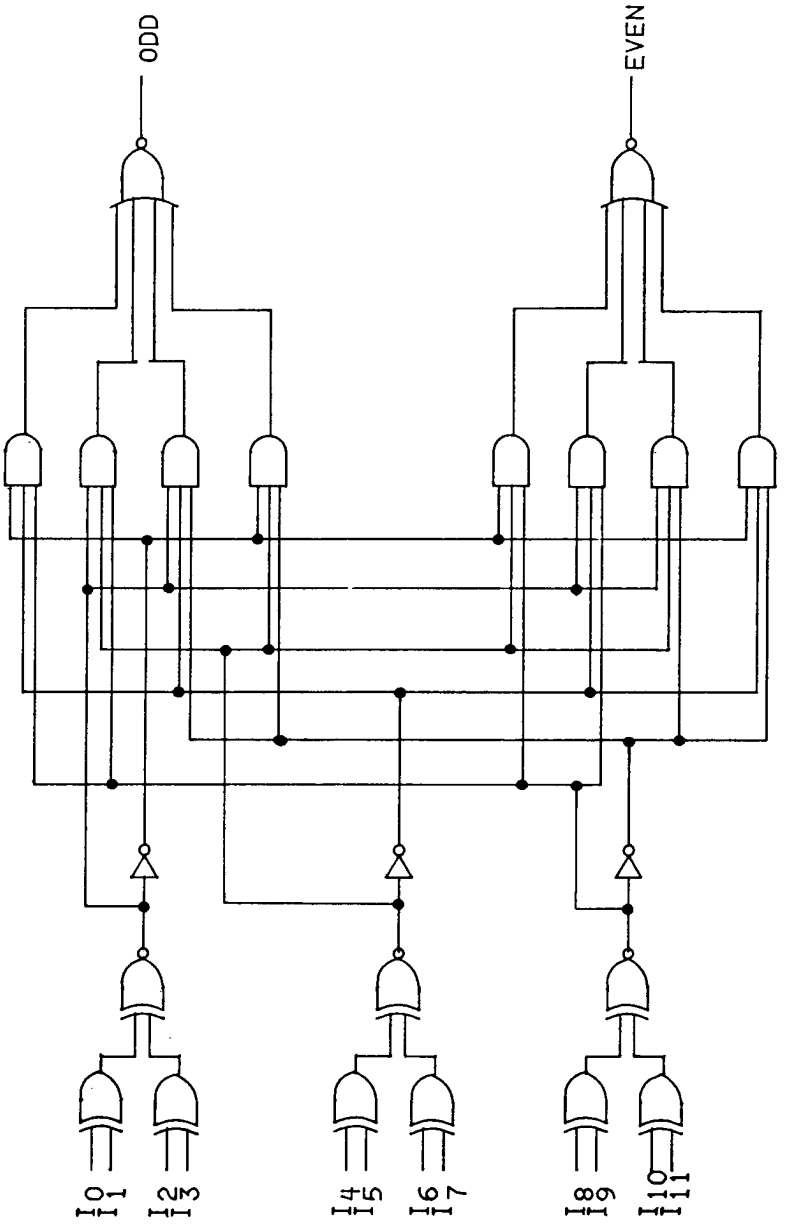

FIGURE 3. Logic diagram.

MILITARY DRAWING DEFENSE ELECTRONICS SUPPLY CENTER DAYTON, OHIO	SIZE A		DWG NO. 5962-86726
		REV	PAGE 7

DESC FORM 193A
FEB 86

Powered by ICminer.com Electronic-Library Service CopyRight 2003

查询"5962-8672601EA"供应商

AC bench load test circuit

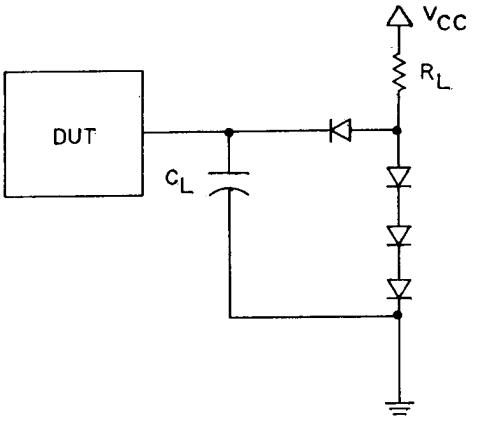

Propagation delay

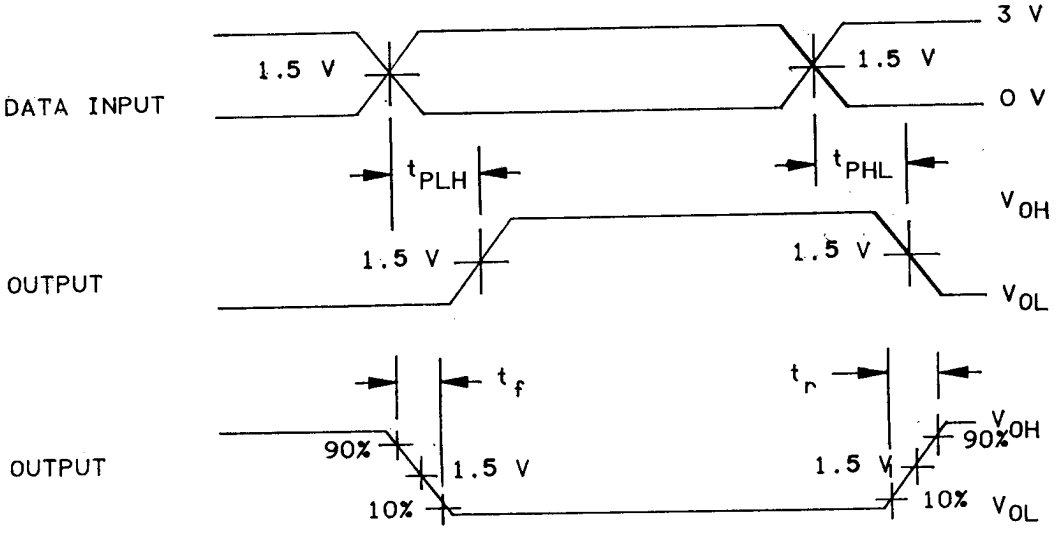

NOTES:
1. Pulse generator for all pulses: Rate < 1 MHz, Zo = 50 ohms, t_r < 15 ns, t_f < 6 ns.
2. C_L includes probe and jig capacitance.
3. All diodes are 1N3064.

FIGURE 4. Switching waveforms and test circuit.

Powered by ICminer.com Electronic-Library Service CopyRight 2003

查询"5962-8672601EA"供应商

4.3.1 Group A inspection.

a. Tests shall be as specified in table II herein.

b. Subgroups 4, 5, and 6 in table I, method 5005 of MIL-STD-883 shall be omitted.

c. Subgroups 7 and 8 tests shall verify the truth table.

4.3.2 Groups C and D inspections.

a. End-point electrical parameters shall be as specified in table II herein.

b. Steady-state life test (method 1005 of MIL-STD-883) conditions:

(1) Test condition C or D using the circuit submitted with the certificate of compliance (see 3.5 herein).

(2) T_A = +125°C, minimum.

(3) Test duration: 1,000 hours, except as permitted by appendix B of MIL-M-38510 and method 1005 of MIL-STD-883.

TABLE II. Electrical test requirements.

MIL-STD-883 test requirements	Subgroups (per method 5005, table I)
Interim electrical parameters (method 5004)	---
Final electrical test parameters (method 5004)	1*,2,3,7,8,9, 10,11
Group A test requirements (method 5005)	1,2,3,7,8,9, 10**,11**
Groups C and D end-point electrical parameters (method 5005)	1,2,3

* PDA applies to subgroup 1.
** Subgroups 10 and 11, if not tested, shall be guaranteed to the specified limits in table I.

Powered by ICminer.com Electronic-Library Service CopyRight 2003

查询"5962-8672601EA"供应商

5. PACKAGING

5.1 Packaging requirements. The requirements for packaging shall be in accordance with MIL-M-38510.

6. NOTES

6.1 Intended use. Microcircuits conforming to this drawing are intended for use when military specifications do not exist and qualified military devices that will perform the required function are not available for OEM application. When a military specification exists and the product covered by this drawing has been qualified for listing on QPL-38510, the device specified herein will be inactivated and will not be used for new design. The QPL-38510 product shall be the preferred item for all applications.

6.2 Replaceability. Microcircuits covered by this drawing will replace the same generic device covered by a contractor-prepared specification or drawing.

6.3 Comments. Comments on this drawing should be directed to DESC-ECS, Dayton, Ohio 45444, or telephone 513-296-5375.

6.4 Approved source of supply. An approved source of supply is listed herein. Additional sources will be added as they become available. The vendor listed herein has agreed to this drawing and a certificate of compliance (see 3.5 herein) has been submitted to DESC-ECS.

Military drawing part number	Vendor CAGE number	Vendor similar part number 1/
5962-8672601EX	34335	AM93S48/BEA
5962-8672601FX	34335	AM93S48/BFA

1/ Caution. Do not use this number for item acquisition. Items acquired to this number may not satisfy the performance requirements of this drawing.

Vendor CAGE number	Vendor name and address
34335	Advanced Micro Devices, Incorporated 901 Thompson Place P.O. Box 3453 Sunnyvale, CA 94088

012575

Powered by ICminer.com Electronic-Library Service CopyRight 2003