查询"AD7581"供应商

CMOS μP-Compatible 8-Bit, 8-Channel DAS

AD7581

FEATURES

8-Bit Resolution
On-Chip 8 X 8 Dual-Port Memory
No Missed Codes Over Full Temperature Range
Interfaces Directly to Z80/8085/6800
CMOS, TTL Compatible Digital Inputs
Three-State Data Drivers
Ratiometric Capability
Interleaved DMA Operation
Fast Conversion
A/D Process Totally Transparent to μP
Low Cost

FUNCTIONAL BLOCK DIAGRAM

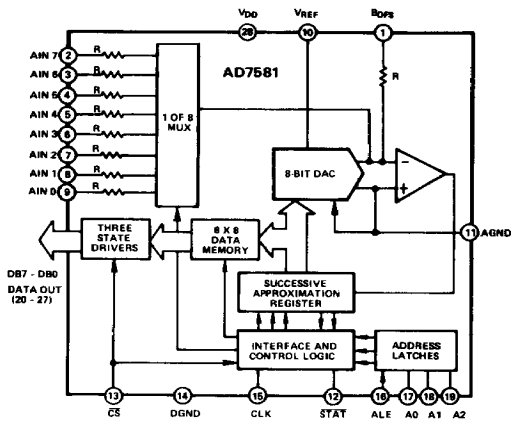

GENERAL DESCRIPTION

The AD7581 is a microprocessor compatible 8 bit, 8 channel, memory buffered, data-acquisition system on a monolithic CMOS chip. It consists of an 8 bit successive approximation A/D converter, an 8 channel multiplexer, 8 X 8 dual-port RAM, three-state DATA drivers (for interface), address latches and microprocessor compatible control logic. The device interfaces directly to 8080, 8085, Z80, 6800 and other microprocessor systems.

The successive approximation conversion takes place on a continuous, channel sequencing, basis using microprocessor control signals for the clock. Data is automatically transferred to its proper location in the 8 X 8 dual-port RAM at the end of each conversion. When under microprocessor control, a READ DATA operation is allowed at any time for any channel since on-chip logic provides interleaved DMA. The facility to latch the address inputs (A_0 – A_2) with ALE enables the AD7581 to interface with μP systems which feature either shared or separate address and data buses.

Powered by ICminer.com Electronic-Library Service CopyRight 2003

AD7581—SPECIFICATIONS

DC SPECIFICATIONS (V_{DD} = +5V, V_{REF} = −10V, Unipolar Operation, unless otherwise stated.)

查询"AD7581JN/+"供应商

Parameter	Version[1]	Typical at +25°C	Limit Over Temperature	Units	Conditions/Comments
ACCURACY					
Resolution	All	8	8	Bits	
Relative Accuracy	JN, AQ	±1 7/8	±1 7/8 max	LSB	
	KN, BQ	±3/4	±3/4 max	LSB	
	LN, CQ	±1/2	±1/2 max	LSB	
Differential Nonlinearity	JN, AQ	±1 7/8	±1 7/8 max	LSB	
	KN, BQ	±7/8	±7/8 max	LSB	
	LN, CQ	±3/4	±3/4 max	LSB	
Offset Error[2]	JN, AQ	200	200 max	mV	Adjustable to zero, See Figure 7a.
	KN, BQ	80	80 max	mV	
	LN, CQ	50	50 max	mV	
Gain Error					
Worst Channel	JN, AQ	±3	±6 max	LSB	Adjustable to zero, See Figure 7a.
	KN, BQ	±2	±4 max	LSB	Gain Error Is Measured After Offset
	LN, CQ	±1	±2 max	LSB	Calibration. Max Full Scale Change for Any Channel from +25°C to T_{min} or T_{max} Is ±2LSB.
Gain Match Between Channels	JN, AQ	2	3 max	LSB	Adjustable to zero, See Figure 7a.
	KN, BQ	1 1/2	2 max	LSB	
	LN, CQ	1	1 max	LSB	
B_{OFS} Gain Error	All	−2 1/2	–	LSB	
ANALOG INPUTS					
Input Resistance					
At V_{REF} (Pin 10)	All	10/20/30	10/20/30	kΩ min/typ/max	
At B_{OFS} (Pin 1)[3]	All	10/20/30	10/20/30	kΩ min/typ/max	
At Any Analog Input (Pins 2–9)	All	10/20/30	10/20/30	kΩ min/typ/max	
V_{REF} (For Specified Performance)	All	−10	−10	V	±5%
V_{REF} Range[4]	All	−5 to −15	−5 to −15	V	
Nominal Analog Input Range					
Unipolar Mode	All	0 to $+V_{REF}$	0 to $+V_{REF}$	V	See Figure 7 and 8.
		0 to $-V_{REF}$	0 to $-V_{REF}$	V	
Bipolar Mode	All	$-VB_{OFS} \leq VA_{IN} \leq \lvert V_{REF} \rvert - VB_{OFS}$			See Figure 9
DIGITAL INPUTS					
$\overline{CS}$ (Pin 13), ALE (Pin 16) $A_0 - A_2$ (Pin 17-19), CLK (Pin 15)					
V_{INH} Logic HIGH Input Voltage	All	+2.2	+2.4 min	V	
V_{INL} Logic LOW Input Voltage	All	+1.2	+0.8 max	V	
I_{IN} Input Current	All	0.01	1 max	μA	V_{IN} = 0V, V_{DD}
C_{IN} Input Capacitance[5]	All	4	5 max	pF	
DIGITAL OUTPUTS					
$\overline{STAT}$ (Pin 12), DB_7 to DB_0 (Pins 20–27)					
V_{OH} Output HIGH Voltage	All	+4.8	+4.5 min	V	I_{SOURCE} = 40μA
V_{OL} Output LOW Voltage	All	+0.4	+0.6 max	V	I_{SINK} = 1.6mA
I_{LKG} DB_7 to DB_0 Floating State Leakage	All	0.3	10 max	μA	
Floating State Output Capacitance (DB_7–DB_0)	All	5	10 max	pF	V_{OUT} = 0V to V_{DD}
Output Code	All	Unipolar Binary Figure 7 Complementary Binary Figure 8 Offset Binary Figure 9			
POWER REQUIREMENTS					
V_{DD}	All	+5	+5	V	
I_{DD} – Static	All	3 typ	5 max	mA	
I_{DD} – Dynamic	All	3 typ	8 max	mA	f_{CLK}=1MHz

NOTES
[1]Temperature range as follows: JN, KN, LN (0 to +70°C); AQ, BQ, CQ (−25°C to +85°C).
[2]Typical offset temperature coefficient is ±150μV/°C.
[3]R_{BOFS}/R_{AIN} (0–7) mismatch causes transfer function rotation about positive full scale. The effect is an offset and a gain term when using the circuits of Figure 8a and Figure 9a.
[4]Typical value, not guaranteed or subject to test.
[5]Guaranteed but not tested.
[6]Typical change in B_{OFS} gain from +25°C to T_{min} to T_{max} is ±2LSBs.
Specifications subject to change without notice.

Powered by ICminer.com Electronic-Library Service CopyRight 2003

AC SPECIFICATIONS (V_{DD} = +5V, V_{REF} = −10V, Unipolar Operation, unless otherwise stated.)

查询"AD7581JN"/+"供应商"

Symbol	Specification	Typical at +25°C	Limit Over Temperature	Units	Conditions
t_H	ALE pulse width	50	80 min	ns	See "Switching Terminology"
t_{ALS}	Address valid to latch set-up time	45	70 min	ns	
t_{ALH}	Address valid to latch hold time	10	20 min	ns	
t_{LCS}	Address latch to $\overline{CS}$ set-up time	10	20 min	ns	
t_{ACC}	$\overline{CS}$ to output propagation delay	200	250 max	ns	C_L = 100pF
t_{CW}	$\overline{CS}$ pulse width	250	280 min	ns	
t_{CF}	$\overline{CS}$ to output float propagation delay	50	80 max	ns	
t_{CLZ}	$\overline{CS}$ to low impedance bus	100	150 max	ns	
f_{CLK}	Clock frequency for stated accuracy	1600	1200 max[1]	kHz	

[1] Guaranteed conversion time of 66.6μs/channel with 1200kHz clock.

ABSOLUTE MAXIMUM RATINGS

V_{DD} to AGND . . . . . +7V
V_{DD} to DGND . . . . . +7V
AGND to DGND . . . . . −0.3V, V_{DD}
Digital Input Voltage to DGND
(Pins 13, 16–19) . . . . . −0.3V, V_{DD} +0.3V
Digital Output Voltage to DGND
(Pins 12, 20–27) . . . . . −0.3V, V_{DD} +0.3V
CLK (Pin 15) Input Voltage to DGND . −0.3V, V_{DD} +0.3V
V_{REF} (Pin 10) to AGND . . . . . ±25V
V_{BOFS} (Pin 1) to AGND . . . . . ±17V
AIN (0–7)(Pin 9–2) . . . . . ±17V
Operating Temperature Range
Commercial (J, K, L Versions) . . . . . 0 to +70°C
Industrial (A, B, C Versions) . . . . . −25°C to +85°C
Storage Temperature . . . . . −65°C to +150°C
Lead Temperature (Soldering, 10secs) . . . . . +300°C
Power Dissipation (Any Package)
to +75°C 1,000mW
Derate above +75°C by . . . . . 10mW/°C

PIN CONFIGURATION

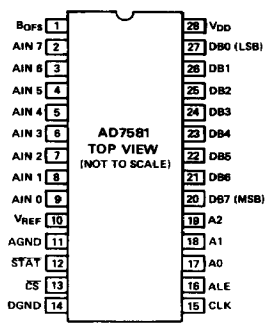

CAUTION

ESD (electrostatic discharge) sensitive device. The digital control inputs are diode protected; however, permanent damage may occur on unconnected devices subject to high energy electrostatic fields. Unused devices must be stored in conductive foam or shunts. The protective foam should be discharged to the destination socket before devices are removed.

ORDERING GUIDE

Model	Temperature Range	Differential Nonlinearity (LSB)	Package Option*
AD7581JN	0 to +70°C	±1 7/8 max	N-28
AD7581KN	0 to +70°C	±7/8 max	N-28
AD7581LN	0 to +70°C	±3/4 max	N-28
AD7581AQ	−25°C to +85°C	±1 7/8 max	Q-28
AD7581BQ	−25°C to +85°C	±7/8 max	Q-28
AD7581CQ	−25°C to +85°C	±3/4 max	Q-28

NOTE
*N = Plastic DIP; Q = Cerdip. For outline information see Package Information section.

Powered by ICminer.com Electronic-Library Service CopyRight 2003

GENERAL CIRCUIT INFORMATION

BASIC CIRCUIT DESCRIPTION

查询"AD7581JN"+"供应商

The AD7581 accepts eight analog inputs and sequentially converts each input into an eight-bit binary word using the successive approximation technique. The conversion results are stored in an 8 X 8 bit dual-port RAM. The device runs either directly from the microprocessor clock (in 6800 type systems) or from some suitable signal (e.g. ALE in 8085 type systems). Most applications require only a –10V reference and a +5V supply. Start-up logic is included on the device to establish the correct sequences on power-up. A maximum of 800 clock pulses are required for this period. Figure 1 shows the AD7581 functional diagram.

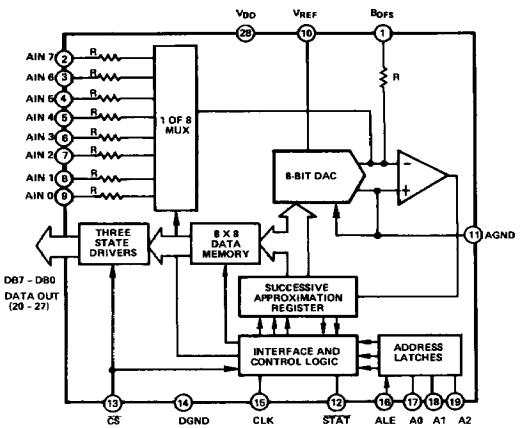

Figure 1. AD7581 Functional Diagram

Conversion of a single channel requires 80 input clock periods and a complete scan through all channels requires 640 input clock periods. When a channel conversion is complete, the successive approximation register contents are loaded into the proper channel location of the 8 X 8 RAM. At this time a status signal output, $\overline{STAT}$ (pin 12), gives a short negative going pulse (8 clock periods). This negative going $\overline{STAT}$ pulse is extended to 72 clock periods when channel 1 conversion is complete. An external pulse-width detector connected to the status pin can be used to derive conversion-related timing signals for microprocessor interrupts (see Channel Identification opposite page). Simultaneous with $\overline{STAT}$ going low, the MUX address is decremented. Eight clock periods later the next conversion is started.

Automatic interleaved DMA is provided by on-chip logic to ensure that memory updates take place at instants when the microprocessor is not addressing memory. Memory locations are addressed by A_0, A_1 and A_2. This address may be latched by ALE for systems which feature a multiplexed address/data bus or alternatively, for systems which have separate address and data buses, the address latches can be made transparent by tying ALE (pin 16) HIGH. $\overline{CS}$ (pin 13) activates three-state buffers to place addressed data on the DB_0 – DB_7 data output pins.

A/D CIRCUIT DETAILS

In the successive approximation technique, successive bits, starting with the most significant bit (DB_7), are applied to the input of the D/A converter. The DAC output is then compared to the unknown analog input voltage, A_{IN} (n), using a comparator. If the DAC output is greater than A_{IN}(n), the data latch for the trial bit is reset to zero, and the next smaller data bit is tried. If the DAC output is less than A_{IN}(n), the trial data bit stays in the "1" state, and the next smaller data bit is tried. Each successive bit is tried, compared to A_{IN}(n), and set or reset in this manner until the least significant bit (DB_0) decision is made. The successive approximation register now contains a valid digital representation of A_{IN}(n). A_{IN}(n) is assumed to be stable during conversion.

The current weighting D/A converter is a precision multiplying DAC. Figure 2 shows the functional diagram of the DAC as used in the AD7581. It consists of a precision Silicon Chromium thin film R/2R ladder network and 8 N-channel MOSFET switches operated in single-pole-double-throw.

The currents in each 2R shunt arm are binarily weighted i.e., the current in the MSB arm is V_{REF} divided by 2R, in the second arm is V_{REF} divided by 4R, etc. Depending on the D/A logic input (A/D output) from the successive approximation register, the current in the individual shunt arms is steered either to A_{GND} or to the comparator summing point.

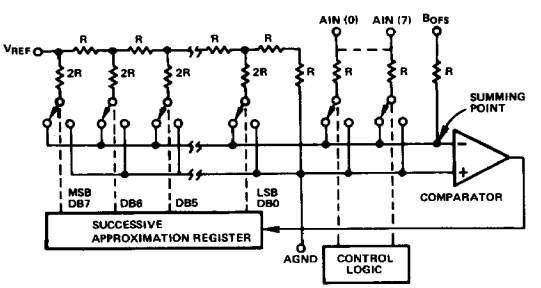

Figure 2. D/A Converter as Used in AD7581

Powered by ICminer.com Electronic-Library Service CopyRight 2003

查询"AD7581JN/+"供应商

TIMING AND CONTROL OF THE AD7581

CHANNEL SELECTION

Table I shows the truth table for the address inputs. The input address is latched when ALE goes LOW. When ALE is HIGH the address input latch is transparent.

A2	A1	A0	ALE	Channel Data To Be Read
0	0	0	1	Channel 0
0	0	1	1	Channel 1
0	1	0	1	Channel 2
0	1	1	1	Channel 3
1	0	0	1	Channel 4
1	0	1	1	Channel 5
1	1	0	1	Channel 6
1	1	1	1	Channel 7

Table I. Channel Selection Truth Table

TIMING AND CONTROL

A typical timing diagram is shown in Figure 3. When $\overline{CS}$ is HIGH, the three-state data drivers are in the high-impedance state. When $\overline{CS}$ goes LOW the data drivers switch to the low-impedance state (i.e., low impedance to DGND or to V_{DD}). Output data is valid after time t_{ACC}.

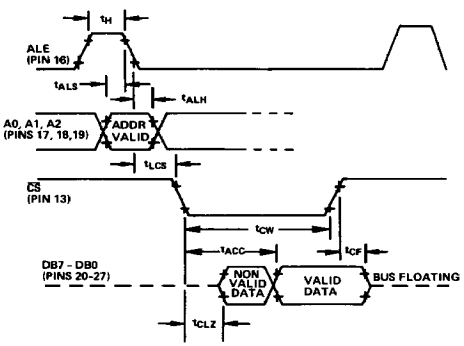

Figure 3. Timing Diagram for the AD7581

SWITCHING TERMINOLOGY

t_H: ALE pulse width requirement.
t_{ALH}: Address Valid to latch hold time.
t_{ALS}: Address Valid to latch set-up time.
t_{LCS}: Address latch to Chip Select set-up time.
t_{CW}: Chip Select pulse width requirement.
t_{ACC}: Chip Select to valid data propagation delay.
t_{CF}: Chip Select to output data float propagation delay.
t_{CLZ}: Chip Select to low impedance data bus.

CHANNEL IDENTIFICATION

In some real-time applications, it may be necessary to provide an interrupt signal when a particular channel receives updated data. To achieve this, it is necessary to identify which channel is currently under conversion. The $\overline{STAT}$ output provides an identifying signal by staying low for an additional 64 clock periods over normal (8 clock periods) when channel 0 is active. This is illustrated in Figure 4. Memory update takes place on a rising edge of a clock pulse and is completed in 200ns. This occurs 6 clock periods before $\overline{STAT}$ goes low.

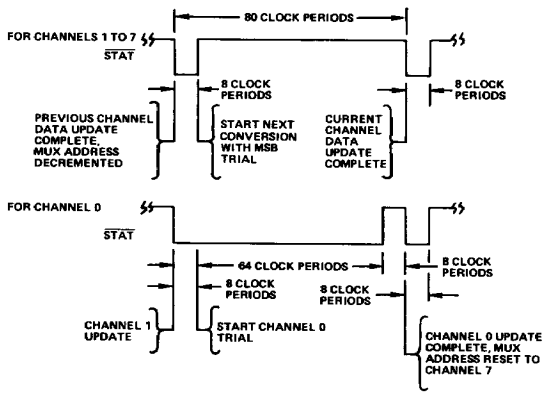

Figure 4. $\overline{STAT}$ Output for Channel Identification

One simple circuit using the $\overline{STAT}$ output is shown in Figure 5. The time constant RC is chosen such that X_2 ignores the normal $\overline{STAT}$ low pulse width (8 clock periods wide) but respond to the much wider $\overline{STAT}$ low pulse width (72 clock periods wide) occurring during channel 0 conversion. Typically for a 1μs clock period C = 0.022μF, R = 1.8kΩ.

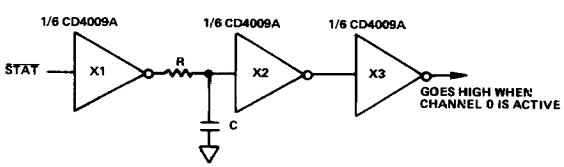

Figure 5. Hardware Channel Identification

Another possibility is to use the microprocessor to interrogate the $\overline{STAT}$ output and hence determine channel identity. A simple routine is shown in Figure 6.

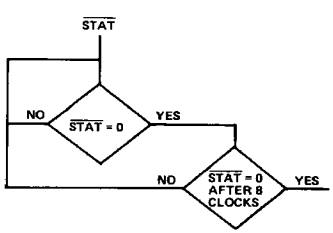

Figure 6. Software Channel Identification

Powered by ICminer.com Electronic-Library Service CopyRight 2003

OPERATING THE AD7581

查询"AD7581UN/+"供应商

UNIPOLAR BINARY OPERATION

Figures 7a and 7b show the analog circuit connections and typical transfer characteristic for unipolar operation (0V to +10V). An AD584 is used for the -10V reference. Calibration is as follows (device clocked i.e., continuous conversions);

OFFSET:

Comparator offset is trimmed out via the bipolar offset pin B_{OFS}. R10, R11 and R12 comprise a simple voltage tap buffered by A1 and feeding into B_{OFS}.

1. Since comparator offset will be the same regardless of which channel is active, take A_0, A_1 and A_2 LOW and and exercise ALE to latch the address.
2. With AIN 0 = 19.5mV (1/2LSB) adjust R11, i.e., the offset voltage on B_{OFS}, until $DB_7 - DB_1$ are LOW and DB_0 (LSB) flickers.

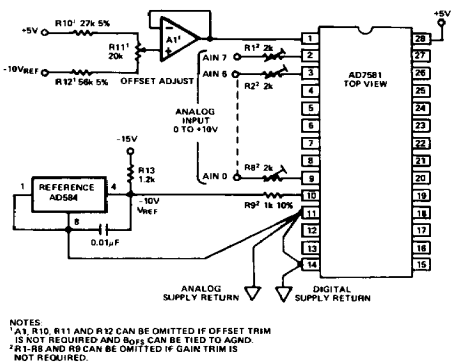

Figure 7a. AD7581 Unipolar (0V to +10V) Operation (Output Code is Straight Binary)

GAIN (FULL SCALE)

In many applications gain adjustment is not required thus removing the need for trimmers in the analog channels. For channels requiring gain trim, the following procedure is recommended. Offset adjustment must be performed before gain adjustment.

1. Apply +9.941V (FS - 3/2LSB) to all input channels AIN (0-7).
2. Select required channel n via A_0, A_1, A_2 and latch the Address using ALE.
3. Adjust trimmer RN of selected channel until $DB_7 - DB_1$ are HIGH and the LSB (DB_0) flickers.
4. Select next channel requiring gain trim and repeat steps 2 and 3.

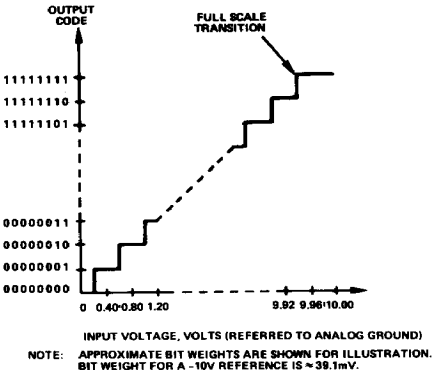

Figure 7b. Transfer Characteristic for Unipolar Circuit of Figure 7a

UNIPOLAR (COMPLEMENTARY BINARY) OPERATION

Figures 8a and 8b show the analog circuit connections and typical transfer characteristic for unipolar (complementary binary) operation.

Calibration is as follows (continuous conversions);

OFFSET:

Comparator offset is trimmed out via the bipolar offset pin B_{OFS}. R10, R11 and R12 comprise a simple voltage tap buffered by A1 and feeding into B_{OFS}.

1. Since comparator offset will be the same regardless of which channel is active, take A_0, A_1 and A_2 LOW and exercise ALE to latch the address.
2. With AIN 0 = -9.98V (-FS + 1/2LSB) adjust R11, i.e., the offset voltage on B_{OFS}, until $DB_7 - DB_1$ are LOW and the LSB (DB_0) flickers.

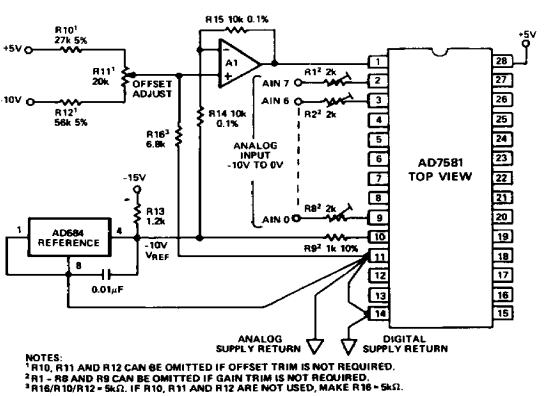

Figure 8a. AD7581 (0V to -10V) Operation (Output Code is Complementary Binary)

Powered by ICminer.com Electronic-Library Service CopyRight 2003

查询"AD7581JN/+"供应商

GAIN (FULL SCALE)

In many applications gain adjustment is not required thus removing the need for trimmers in the analog channels. For channels requiring gain trim, the following procedure is recommended. Offset adjustment must be performed before gain adjustment.

1) Apply -58.6mV (3/2LSB) to all input channels AIN (0–7).
2) Select required channel n via A_0, A_1, A_2 and exercise ALE to latch the address.
3) Adjust trimmer RN of selected channel until DB_7 – DB1 are HIGH and the LSB (DB_0) flickers.
4) Select next channel requiring gain trim and repeat step 2 and 3.

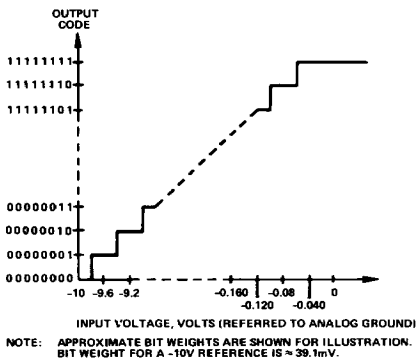

Figure 8b. Transfer Characteristic for Unipolar Circuit of Figure 8a

BIPOLAR (OFFSET BINARY) OPERATION

Figures 9a and 9b illustrate the analog circuitry and transfer characteristic for ±5V bipolar operation. Output coding is offset binary. Comparator offset correction is again applied to the B_{OFS} pin.

Calibration is as follows (continuous conversions);

OFFSET:

1. Apply -4.980V (-FS/2 + 1/2LSB) to all input channels AIN (0–7).
2. Trim R11 of the comparator offset circuit until DB_7 – DB_1 are LOW and the LSB (DB_0) flickers.

GAIN (FULL SCALE)

1. Apply +4.941V (+FS/2 -3/2LSB) to all input channels, A_{IN} (0–7).
2. Select required channel n via A_0, A_1, A_2, and latch the address using ALE.
3. Adjust trimmer RN of selected channel until DB_7 – DB_1 are HIGH and the LSB (DB_0) flickers.
4. Select next channel requiring gain trim and repeat steps 2 and 3.
5. Apply -19.5mV to each gain-trimmed channel. If the ADC output code does not flicker between 01111111 and 10000000 repeat the calibration procedure.

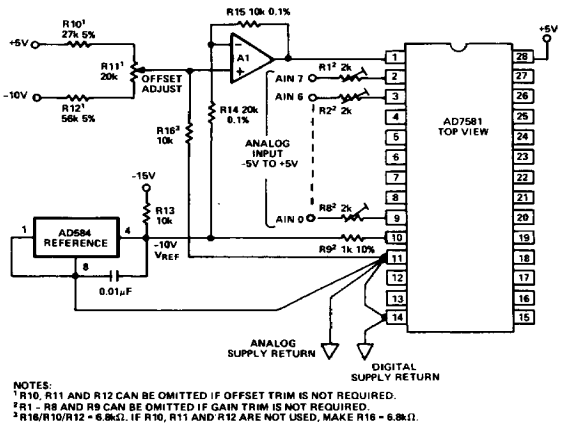

Figure 9a. AD7581 Bipolar (-5V to +5V) Operation (Output Code is Offset Binary)

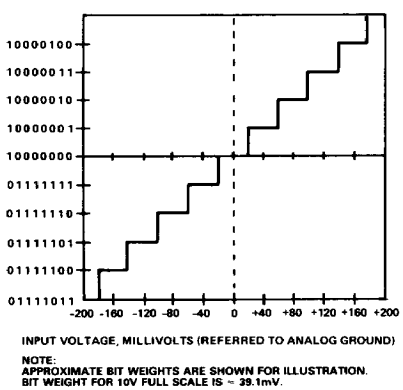

Figure 9b. Transfer Characteristic Around Major Carry for Bipolar Circuit of Figure 9a

Powered by ICminer.com Electronic-Library Service CopyRight 2003

INTERFACING THE AD7581

查询"AD7581JN/+"供应商

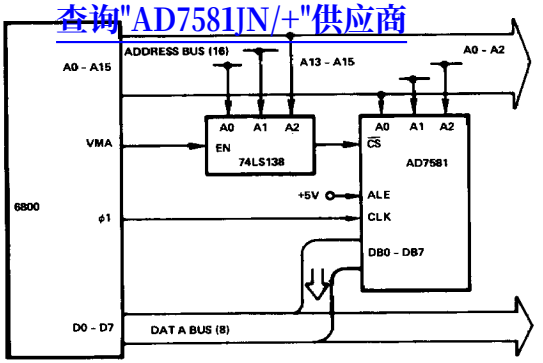

Figure 10. AD7581/6800 Interface

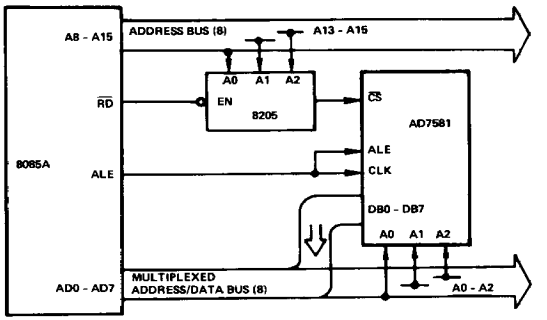

Figure 11. AD7581/8085 Interface

NOTES:

1. ANALOG AND DIGITAL GROUND
   It is recommended that A_{GND} and D_{GND} be connected locally to prevent the possibility of injecting noise into the AD7581. In systems where the A_{GND} – D_{GND} intertie is not local, connect back-to-back diodes (1N914 or equivalent) between the AD7581 A_{GND} and D_{GND} pins.
2. LOGIC DEGLITCHING IN μP APPLICATIONS
   Unspecified states on the address bus (due to different rise and fall times on the address bus) can cause glitches at the AD7581 $\overline{CS}$ terminal. These glitches can cause unwanted reads. The best way to avoid glitches is to gate the address decoding logic, e.g., with RD (8080), $\overline{RD}$ (8085) or VMA (6800).

Powered by ICminer.com Electronic-Library Service CopyRight 2003