Order this document
by MRF6404/D

查询"MRF6404K"供应商

The RF Line

NPN Silicon RF Power Transistor

MRF6404
MRF6404K

30 W, 1.88 GHz
RF POWER TRANSISTOR
NPN SILICON

The MRF6404 is designed for 26 volts microwave large signal, common emitter, class AB linear amplifier applications operating in the range 1.8 to 2.0 GHz.

- Specified 26 Volts, 1.88 GHz Characteristics
  Output Power — 30 Watts
  Gain — 7.5 dB Min @ 30 Watts
  Efficiency — 38% Min @ 30 Watts
- Characterized with Series Equivalent Large–Signal Parameters from 1.8 to 2.0 GHz
- To be used in Class AB for DCS1800 and PCS1900/Cellular Radio
- Gold Metallized, Emitter Ballasted for Long Life and Resistance to Metal Migration

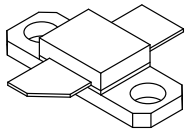

CASE 395C–01, STYLE 1

MAXIMUM RATINGS

Rating	Symbol	Value	Unit
Collector–Emitter Voltage	V_{CEO}	24	Vdc
Collector–Emitter Voltage	V_{CES}	60	Vdc
Emitter–Base Voltage	V_{EBO}	4	Vdc
Collector–Current — Continuous	I_C	10	Adc
Total Device Dissipation @ T_C = 25°C Derate above 25°C	P_D	125 0.71	Watts W/°C
Storage Temperature Range	T_{stg}	–65 to +150	°C
Operating Junction Temperature	T_J	200	°C

THERMAL CHARACTERISTICS

Characteristic	Symbol	Max	Unit
Thermal Resistance, Junction to Case (1)	$R_{\theta JC}$	1.4	°C/W

ELECTRICAL CHARACTERISTICS (T_C = 25°C unless otherwise noted)

Characteristic	Symbol	Min	Typ	Max	Unit
OFF CHARACTERISTICS					
Collector–Emitter Breakdown Voltage (I_C = 50 mA, I_B = 0)	$V_{(BR)CEO}$	24	29	—	Vdc
Emitter–Base Breakdown Voltage (I_E = 10 mAdc)	$V_{(BR)EBO}$	4	5	—	Vdc
Collector–Base Breakdown Voltage (I_C = 50 mAdc)	$V_{(BR)CES}$	60	68	—	Vdc
Collector–Base Breakdown Voltage (I_C = 50 mAdc, R_{BE} = 75 Ω)	$V_{(BR)CER}$	40	56	—	Vdc
Collector Cutoff Current (V_{CE} = 30 V, V_{BE} = 0)	I_{CES}	—	—	10	mA
ON CHARACTERISTICS					
DC Current Gain (I_C = 1 Adc, V_{CE} = 5 Vdc)	h_{FE}	20	50	120	—

(1) Thermal resistance is determined under specified RF operating condition.

© Motorola, Inc. 1996

ELECTRICAL CHARACTERISTICS — continued (T_C = 25°C unless otherwise noted)

查询"MRF6404K"供应商

Characteristic	Symbol	Min	Typ	Max	Unit
DYNAMIC CHARACTERISTICS					
Output Capacitance (V_{CB} = 26 V, I_E = 0, f = 1 MHz) For information only. This part is collector matched.	C_{ob}	30	38	—	pF
FUNCTIONAL TESTS					
Common–Emitter Amplifier Power Gain (V_{CC} = 26 V, P_{out} = 30 W, I_{CQ} = 150 mA, f = 1.88 GHz)	G_{pe}	7.5	8.5	—	dB
Common–Emitter Amplifier Power Gain (V_{CC} = 26 V, P_{out} = 28 W, I_{CQ} = 150 mA) (f = 1.99 GHz)	G_{pe}	7	8	—	dB
Collector Efficiency (V_{CC} = 26 V, P_{out} = 30 W, f = 1.88 GHz) (V_{CC} = 26 V, P_{out} = 28 W, f = 1.99 GHz)	η	 38 35	 43 40	 — —	%
Output Power at 1 dBc (V_{CC} = 26 V, f = 1.88 GHz) (V_{CC} = 26 V, f = 1.99 GHz)	P_{1dBc}	 30 28	 35 33	 — —	Watts
Output Mismatch Stress: VSWR = 3:1 (all phase angles) (V_{CC} = 26 Vdc, P_{out} = 25 W, I_{CQ} = 150 mA, f = 1.88 GHz)	Ψ	No Degradation in Output Power			

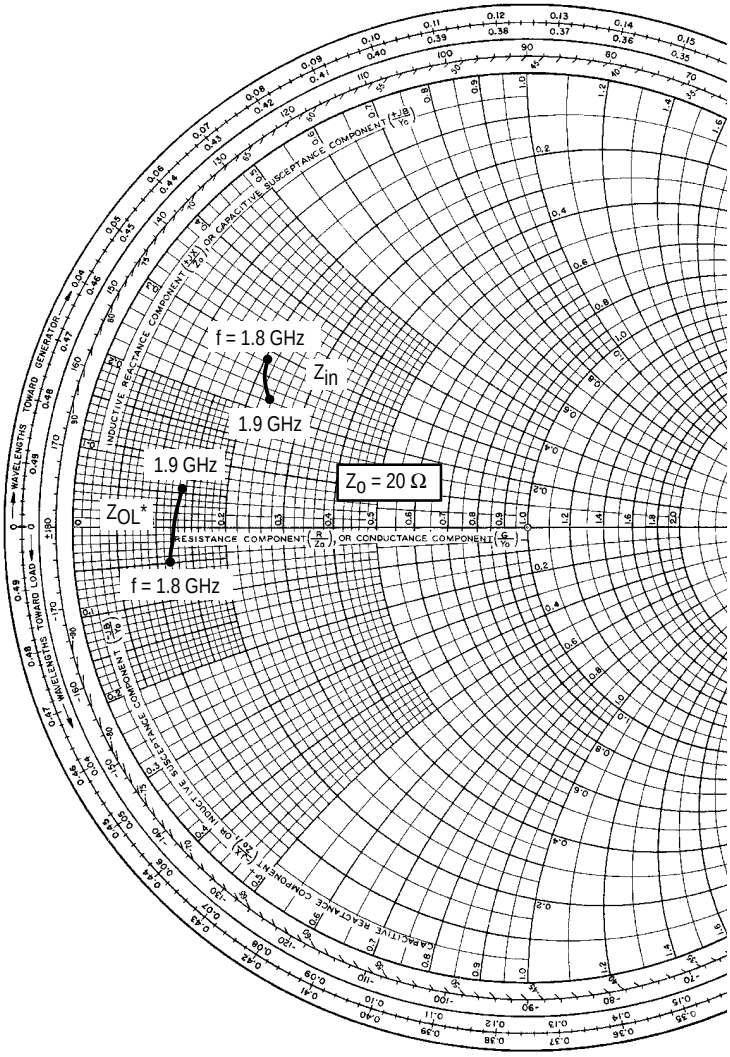

DCS EVALUATION

f (GHz)	Z_{in} (Ω)	Z_{OL}* (Ω)
1.8	4.3 + j6.1	2.7 – j1.0
1.85	4.6 + j5.3	2.9 + j0.3
1.9	4.8 + j5.0	3.0 + j1.2

Z_{OL}*: Conjugate of optimum load impedance into which the device operates at a given output power, voltage, current and frequency.

Figure 1. Input and Output Impedances with Circuit Tuned for Maximum Gain @ V_{CC} = 26 V, I_{CQ} = 150 mA, P_{out} = 30 W

TYPICAL CHARACTERISTICS

查询"MRF6404K"供应商

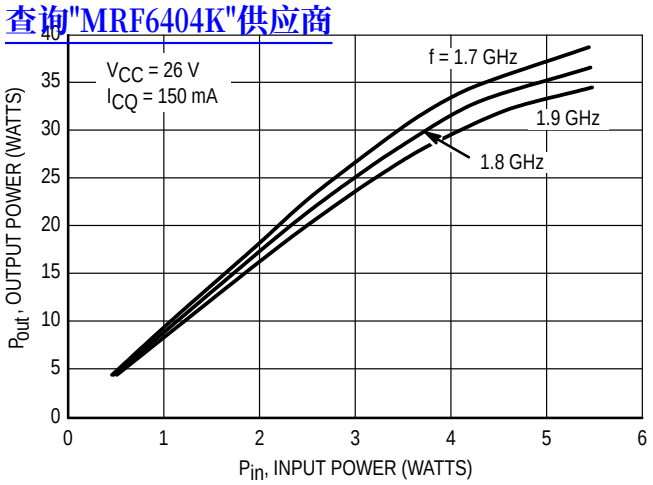

Figure 2. Output Power versus Input Power

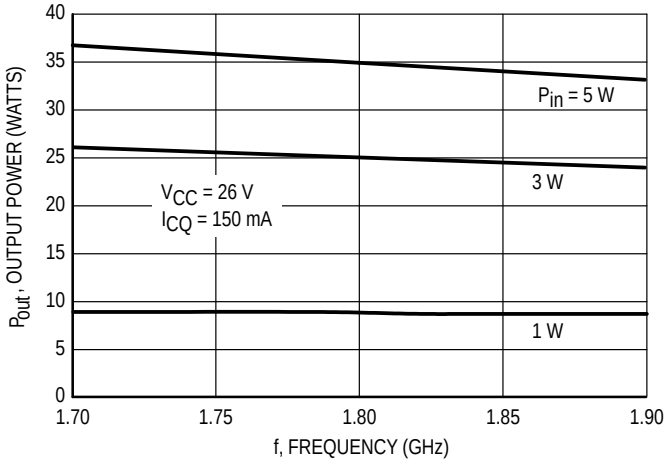

Figure 3. Output Power versus Frequency

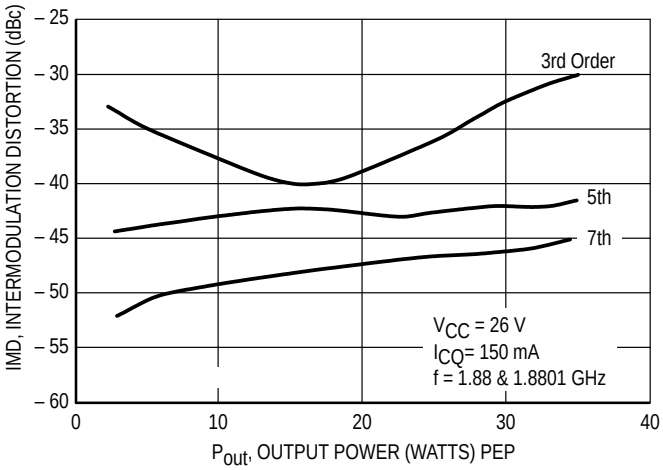

Figure 4. Intermodulation versus Output Power

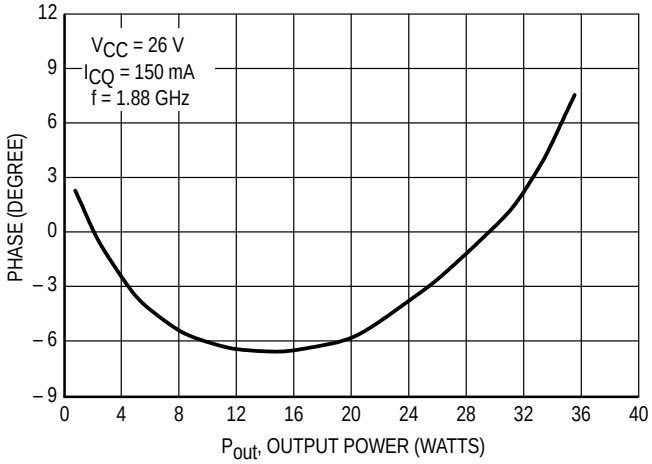

Figure 5. AM/PM Conversion

查询"MRF6404K"供应商

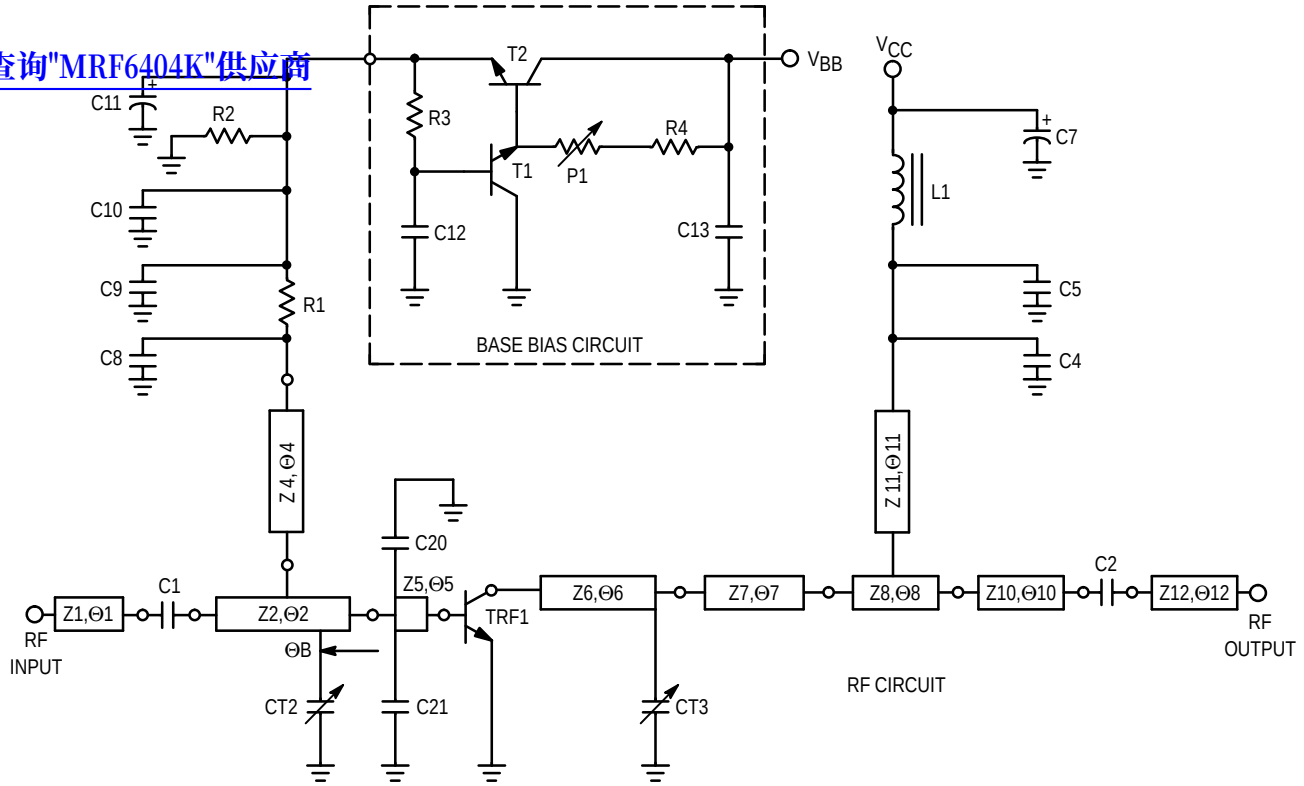

Base Bias Circuit

C12, C13	15 nF, Chip Capacitor, Vitramon (0805 A153 JXB)
P1	1 KΩ, Trimmer
R3	47 Ω, Chip Resistor, 0805
R4	330 Ω, Chip Resistor, 0805
T1,T2	Motorola MJD 31C

Decoupling Base Bias Circuit

C4	68 pF, Chip Capacitor, ATC 100A
C5, C9	330 pF, Chip Capacitor, Vitramon (0805 A331 JXB)
C7, C11	4.7 µF, 63 V, Electrolytic Capacitor
C8	68 pF, Chip Capacitor, ATC 100A
C10	15 nF, Chip Capacitor, Vitramon (0805 A153 JXB)
R1	1.5 Ω, Chip Resistor, 0805
R2	56 Ω, Chip Resistor, 1206

RF Circuit

C1, C2	68 pF, Chip Capacitor, ATC 100A
C20, C21	1.3 pF, Chip Capacitor, ATC 100A
CT2	Trimmer Capacitor, Gigatrim, Ref 37281
CT3	Trimmer Capacitor, Gigatrim, Ref 37291
TRF1	MRF6404

PC Board Material:
ε_r = 2.55, H = 0.508 mm, T = 0.035 mm

All Electrical Lengths Are Referenced from λg @ f = 1.9 GHz

Z1 : 50 Ω	Θ1 : 10°
Z2 : 50 Ω	Θ2 : 74.5° ΘB : 16.5°
Z4 : 74 Ω	Θ4 : 68°
Z5 : 12.8 Ω	Θ5 : 21°
Z6 : 10.4 Ω	Θ6 : 49.5°
Z7 : 18 Ω	Θ7 : 36.5°
Z8 : 45 Ω	Θ8 : 20°
Z10 : 50 Ω	Θ10 : 10°
Z11 : 74 Ω	Θ11 : 74.5°
Z12 : 50 Ω	Θ12 : 10°

Figure 6. 1.80 – 1.88 GHz Test Circuit Electrical Schematic and Components List

查询"MRF6404K"供应商

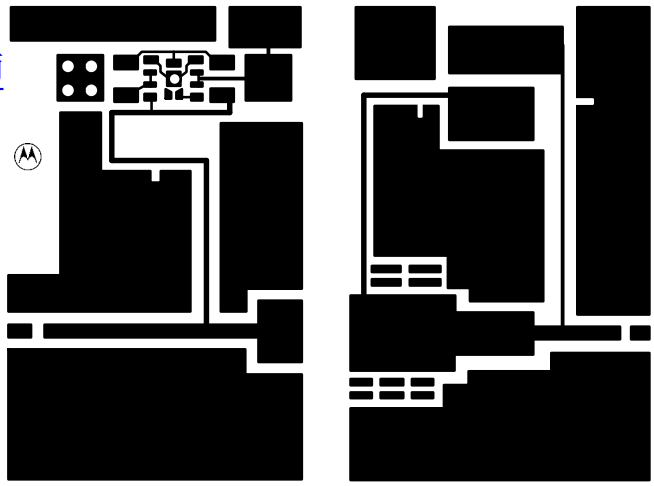

(Not to Scale)

Teflon® Glass 0.5 mm – Double Side 35 µm Cu.

Figure 7. 1.80 – 1.88 GHz PCN Test Circuit Photomaster

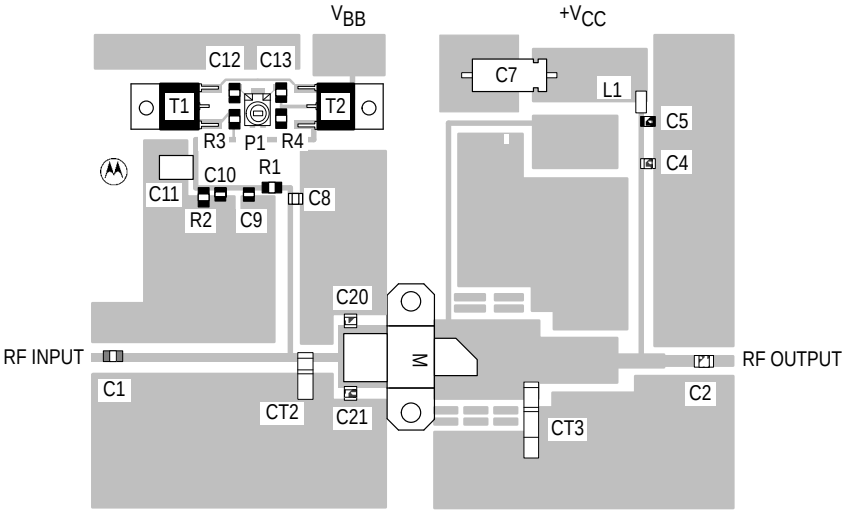

Figure 8. 1.80 – 1.88 GHz PCN Test Circuit Components Layout

查询"MRF6404K"供应商

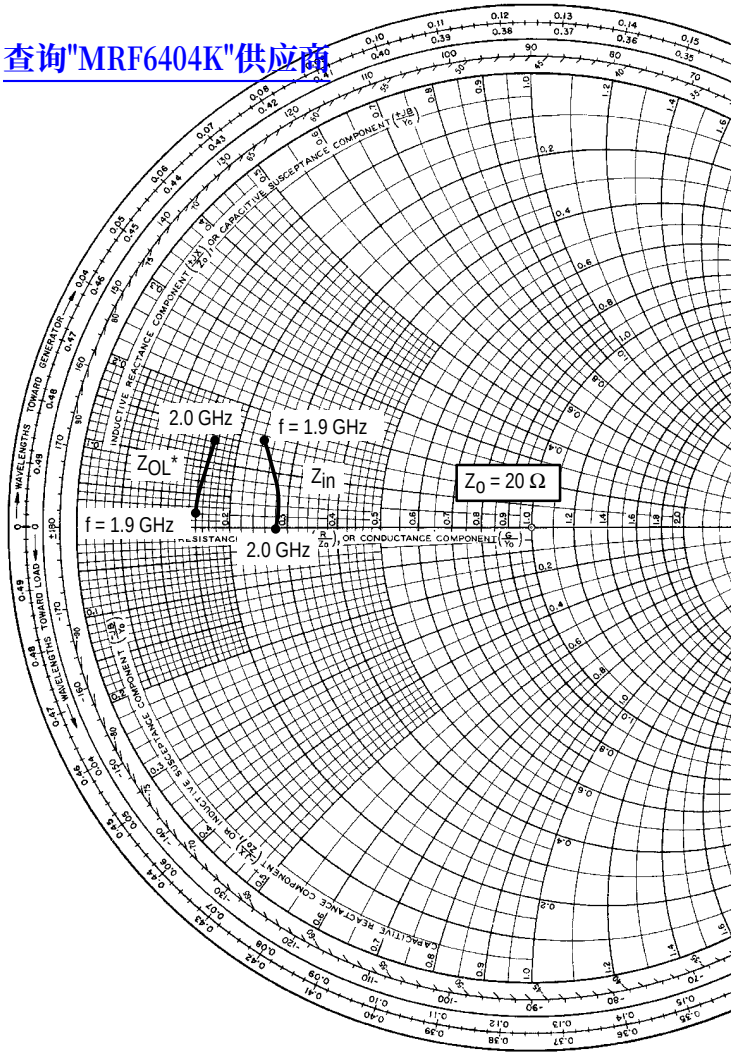

PCS EVALUATION

f (GHz)	Z_{in} (Ω)	Z_{OL}* (Ω)
1.90	4.9 + j3.0	3.2 + j0.5
1.93	5.4 + j2.5	3.3 + j1.2
1.97	5.6 + j1.4	3.4 + j1.5
2.00	5.4 – j0.2	3.6 + j2.5

Z_{OL}*: Conjugate of optimum load impedance into which the device operates at a given output power, voltage, current and frequency.

Figure 9. Input and Output Impedances with Circuit Tuned for Maximum Gain @ V_{CC} = 26 V, I_{CQ} = 150 mA, P_{out} = 28 W

TYPICAL CHARACTERISTICS

查询"MRF6404K"供应商

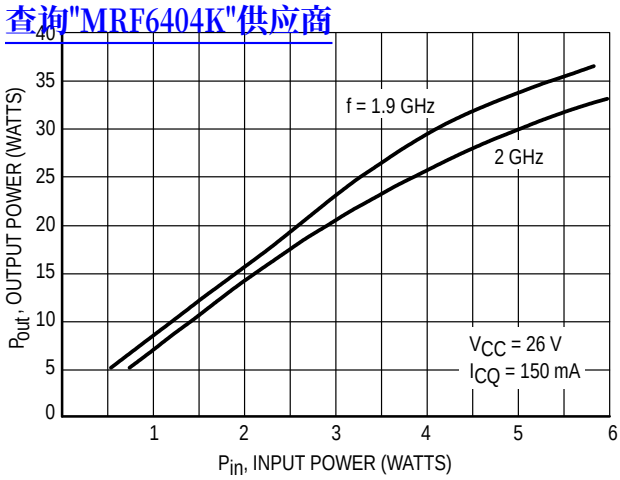

Figure 10. Output Power versus Input Power

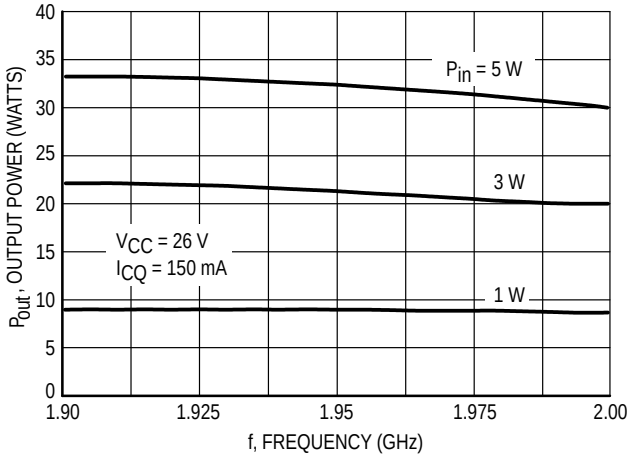

Figure 11. Output Power versus Frequency

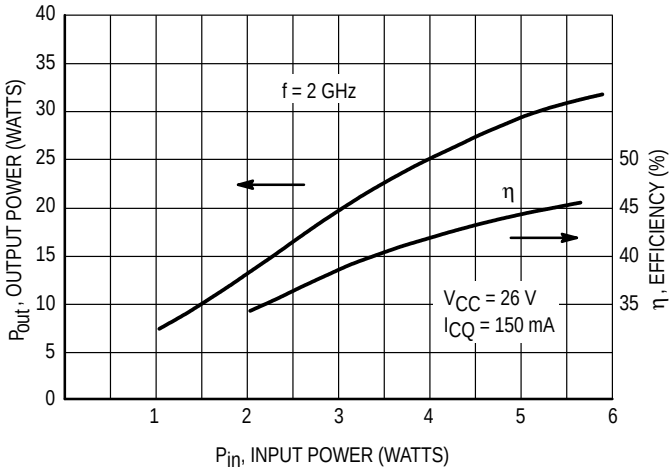

Figure 12. Output Power and Efficiency versus Input Power

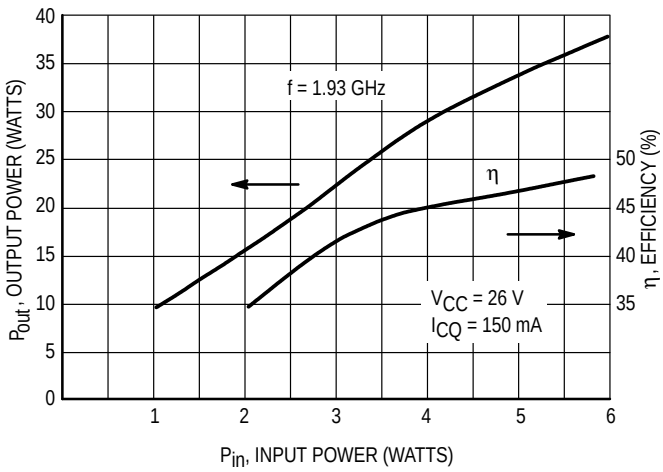

Figure 13. Output Power and Efficiency versus Input Power

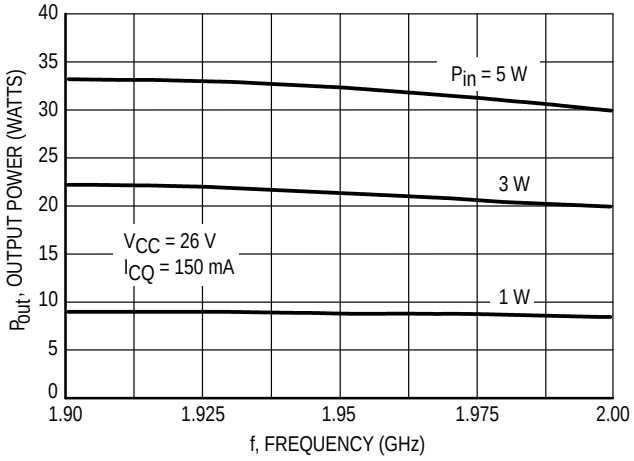

Figure 14. Output Power versus Frequency

查询"MRF6404K"供应商

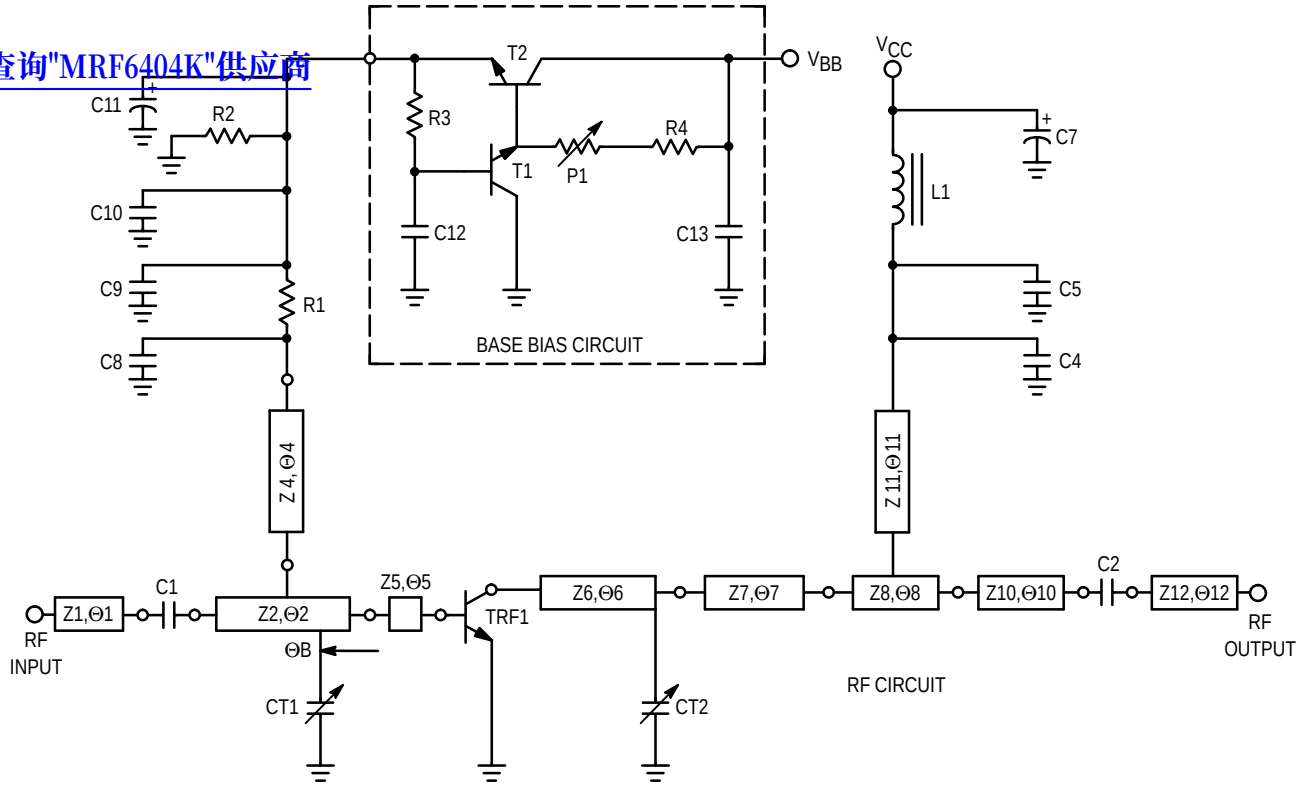

Base Bias Circuit

C12, C13	15 nF, Chip Capacitor, Vitramon (0805 A153 JXB)
P1	1 KΩ, Trimmer
R3	47 Ω, Chip Resistor, 0805
R4	330 Ω, Chip Resistor, 0805
T1,T2	Motorola MJD 31C

Decoupling Base Bias Circuit

C4	68 pF, Chip Capacitor, ATC 100A
C5, C9	330 pF, Chip Capacitor, Vitramon (0805 A331 JXB)
C7, C11	4.7 µF, 63 V, Electrolytic Capacitor
C8	68 pF, Chip Capacitor, ATC 100A
C10	15 nF, Chip Capacitor, Vitramon (0805 A153 JXB)
R1	1.2 Ω, Chip Resistor, 0805
R2	56 Ω, Chip Resistor, 1206

RF Circuit

C1, C2	68 pF, Chip Capacitor, ATC 100A
C20, C21	1.3 pF, Chip Capacitor, ATC 100A
CT1, CT2	Trimmer Capacitor, Gigatrim, Ref 37271
TRF1	MRF6404

PC Board Material:
ε_r = 2.55, H = 0.508 mm, T = 0.035 mm

All Electrical Lengths Are Referenced from λg @ f = 1.9 GHz

Z1 : 50 Ω	Θ1 : 10°
Z2 : 50 Ω	Θ2 : 74.5° ΘB : 16.5°
Z4 : 74 Ω	Θ4 : 68°
Z5 : 12.8 Ω	Θ5 : 21°
Z6 : 10.4 Ω	Θ6 : 49.5°
Z7 : 18 Ω	Θ7 : 36.5°
Z8 : 45 Ω	Θ8 : 20°
Z10 : 50 Ω	Θ10 : 10°
Z11 : 74 Ω	Θ11 : 60°
Z12 : 50 Ω	Θ12 : 10°

Figure 15. 1.9 – 2.0 GHz Test Circuit Electrical Schematic and Components List

查询"MRF6404K"供应商

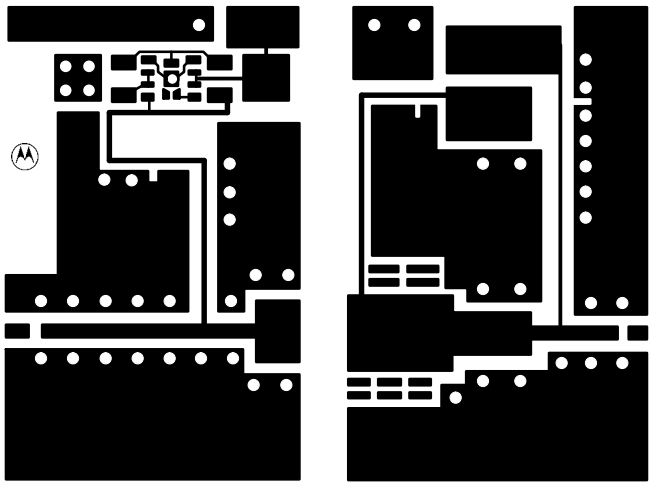

(Not to Scale)

Teflon® Glass 0.5 mm – Double Side 35 µm Cu.

Figure 16. 1.9 – 2.0 GHz Test Circuit Photomaster

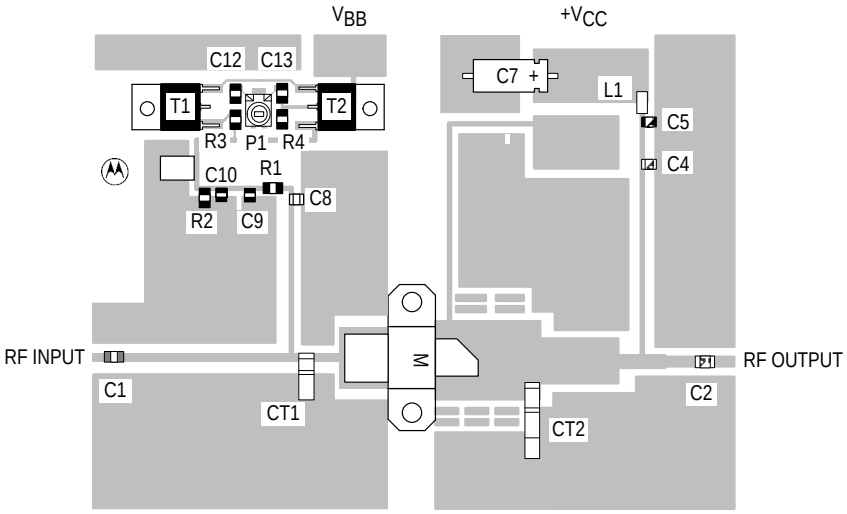

Figure 17. 1.9 – 2.0 GHz Test Circuit Components Layout

PACKAGE DIMENSIONS

查询"MRF6404K"供应商

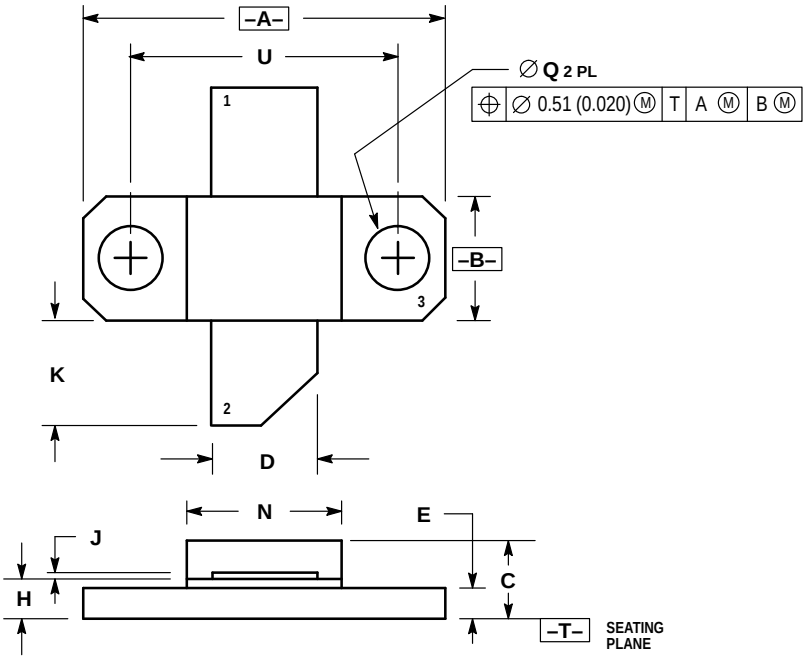

NOTES:
1. DIMENSIONING AND TOLERANCING PER ANSI Y14.5M, 1982.
2. CONTROLLING DIMENSION: INCH.

	INCHES		MILLIMETERS	
DIM	MIN	MAX	MIN	MAX
A	0.739	0.750	18.77	19.05
B	0.240	0.260	6.10	6.60
C	0.165	0.198	4.19	5.03
D	0.215	0.225	5.46	5.72
E	0.055	0.070	1.40	1.78
H	0.079	0.091	2.01	2.31
J	0.004	0.006	0.10	0.15
K	0.210	0.240	5.33	6.10
N	0.315	0.330	8.00	8.38
Q	0.125	0.135	3.18	3.42
U	0.560 BSC		14.23 BSC	

STYLE 1:
PIN 1. BASE
2. COLLECTOR
3. EMITTER

CASE 395C–01
ISSUE A

Motorola reserves the right to make changes without further notice to any products herein. Motorola makes no warranty, representation or guarantee regarding the suitability of its products for any particular purpose, nor does Motorola assume any liability arising out of the application or use of any product or circuit, and specifically disclaims any and all liability, including without limitation consequential or incidental damages. “Typical” parameters which may be provided in Motorola data sheets and/or specifications can and do vary in different applications and actual performance may vary over time. All operating parameters, including “Typicals” must be validated for each customer application by customer’s technical experts. Motorola does not convey any license under its patent rights nor the rights of others. Motorola products are not designed, intended, or authorized for use as components in systems intended for surgical implant into the body, or other applications intended to support or sustain life, or for any other application in which the failure of the Motorola product could create a situation where personal injury or death may occur. Should Buyer purchase or use Motorola products for any such unintended or unauthorized application, Buyer shall indemnify and hold Motorola and its officers, employees, subsidiaries, affiliates, and distributors harmless against all claims, costs, damages, and expenses, and reasonable attorney fees arising out of, directly or indirectly, any claim of personal injury or death associated with such unintended or unauthorized use, even if such claim alleges that Motorola was negligent regarding the design or manufacture of the part. Motorola and Ⓜ are registered trademarks of Motorola, Inc. Motorola, Inc. is an Equal Opportunity/Affirmative Action Employer.

How to reach us:
USA / EUROPE / Locations Not Listed: Motorola Literature Distribution; P.O. Box 20912; Phoenix, Arizona 85036. 1–800–441–2447 or 602–303–5454

MFAX: RMFAX0@email.sps.mot.com – TOUCHTONE 602–244–6609
INTERNET: http://Design–NET.com

JAPAN: Nippon Motorola Ltd.; Tatsumi–SPD–JLDC, 6F Seibu–Butsuryu–Center, 3–14–2 Tatsumi Koto–Ku, Tokyo 135, Japan. 03–81–3521–8315

ASIA / PACIFIC: Motorola Semiconductors H.K. Ltd.; 8B Tai Ping Industrial Park, 51 Ting Kok Road, Tai Po, N.T., Hong Kong. 852–26629298