查询"2SD1654"供应商

SANYO

No.1752

2SD1654

Silicon NPN Triple Diffused Planar Transistor

COLOR TV HORIZONTAL DEFLECTION OUTPUT APPLICATIONS (WITH DAMPER DIODE)

Applications

. High-voltage, power switching

Features

. Fast speed ($t_f$max=0.7us).
. High reliability (Adoption of HVP process).
. High breakdown voltage (V_{CBO}=1500V).
. Micaless package facilitating mounting operation.

Absolute Maximum Ratings at Ta=25°C

				unit
Collector to Base Voltage	V_{CBO}		1500	V
Collector to Emitter Voltage	V_{CEO}		800	V
Emitter to Base Voltage	V_{EBO}		6	V
Collector Current	I_C		3.5	A
Peak Collector Current	i_{cp}		10	A
Collector Dissipation	P_C	T_C=25°C	50	W
Junction Temperature	Tj		150	°C
Storage Temperature	Tstg		-55 to +150	°C

Electrical Characteristics at Ta=25°C

			min	typ	max	unit
Collector Cutoff Current	I_{CBO}	V_{CB}=800V, I_E=0			10	uA
Emitter Cutoff Current	I_{EBO}	V_{EB}=5V, I_C=0			1	mA
DC Current Gain	h_{FE}	V_{CE}=5V, I_C=0.5A	8			
Gain Bandwidth Product	f_T	V_{CE}=10V, I_C=0.5A		3		MHz
Collector to Emitter Saturation Voltage	$V_{CE(sat)}$	I_C=2.5A, I_B=0.8A			8	V
Base to Emitter Saturation Voltage	$V_{BE(sat)}$	I_C=2.5A, I_B=0.8A			1.5	V
Collector to Base Breakdown Voltage	$V_{(BR)CBO}$	I_C=5mA, I_E=0	1500			V
Collector to Emitter Breakdown Voltage	$V_{(BR)CEO}$	I_C=100mA, R_{BE}=∞	800			V
Emitter to Base Breakdown Voltage	$V_{(BR)EBO}$	I_E=200mA, I_C=0	7			V
Fall Time	t_f	I_C=3A, I_{B1}=0.8A, I_{B2}=-1.6A			0.7	us

Switching Time Test Circuit

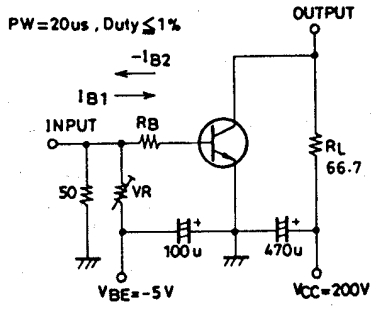

Case Outline 2039 (unit:mm)

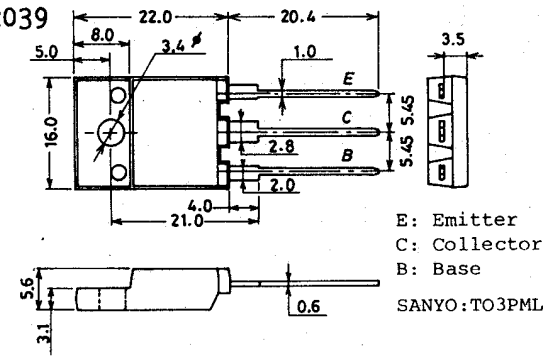

These specifications are subject to change without notice.

TOKYO SANYO ELECTRIC CO., LTD. SEMICONDUCTOR DIVISION
15-13 6-CHOME, SOTOKANDA CHIYODA-KU, TOKYO 101 JAPAN