LOW-POWER STEREO CODEC WITH INTEGRATED MONO CLASS-D SPEAKER AMPLIFIER

FEATURES

- **Stereo CODEC with Integrated Mono Class-D Amplifier**
- **High Performance Audio DAC**
  - **97 dBA Signal-to-Noise Ratio (Single Ended)**
  - **16/20/24/32-Bit Data**
  - **Supports Sample Rates From 8 kHz to 96 kHz**
  - **3D/Bass/Treble/EQ/De-Emphasis Effects**
  - **Flexible Power Saving Modes and Performance are Available**
- **High Performance Audio ADC**
  - **92 dBA Signal-to-Noise Ratio**
  - **Supports Rates From 8 kHz to 96 kHz**
  - **Digital Signal Processing and Noise Filtering Available During Record**
- **Seven Audio Input Pins**
  - **Programmable as 6 Single-Ended or 3 Fully Differential Inputs**
  - **Capability for Floating Input Configurations**
- **Multiple Audio Output Drivers**
  - **Mono Fully Differential or Stereo Single-Ended Headphone Drivers**
  - **Single-Ended Stereo Line Outputs**
- **Mono 1W Class-D BTL 8Ω Speaker Driver**
- **Low Power Consumption: 15-mW Stereo 48-kHz Playback With 3.3-V Analog Supply**
- **Ultra-Low Power Mode with Passive Analog Bypass**
- **Programmable Input/Output Analog Gains**
- **Automatic Gain Control (AGC) for Record**
- **Programmable Microphone Bias Level**
- **Programmable PLL for Flexible Clock Generation**
- **I^2C™ Control Bus**
- **Audio Serial Data Bus Supports I^2S, Left/Right-Justified, DSP, and TDM Modes**
- **Extensive Modular Power Control**
- **Power Supplies:**
  - **Speaker Amp: 2.7 V–5.5 V**
  - **Analog: 2.7 V–3.6 V.**
  - **Digital Core: 1.525 V–1.95 V**
  - **Digital I/O: 1.1 V–3.6 V**
- **Packages: 5 × 5 mm 40-QFN, 0.4 mm Pitch**
- **3.5 × 3 mm 42-WCSP, 0.5 mm Pitch**

APPLICATIONS

- **Cellular Handsets**
- **Digital Cameras**
- **Portable Media Players**
- **General Portable Audio Equipment**

DESCRIPTION

The TLV320AIC3107 is a low power stereo audio codec with stereo headphone amplifier, and mono class-D speaker driver, as well as multiple inputs and outputs programmable in single-ended or fully differential configurations. Extensive register-based power control is included, enabling stereo 48-kHz DAC playback as low as 15 mW from a 3.3-V analog supply, making it ideal for portable battery-powered audio and telephony applications.

The record path of the TLV320AIC3107 contains integrated microphone bias, digitally controlled stereo microphone preamplifier, and automatic gain control (AGC), with mix/mux capability among the multiple analog inputs. Programmable filters are available during record which can remove audible noise that can occur during optical zooming in digital cameras. The playback path includes mix/mux capability from the stereo DAC and selected inputs, through programmable volume controls, to the various outputs.

The TLV320AIC3107 contains three high-power output drivers as well as two single-ended line output drivers, and a differential class-D output driver.

Please be aware that an important notice concerning availability, standard warranty, and use in critical applications of Texas Instruments semiconductor products and disclaimers thereto appears at the end of this data sheet.

I2C is a trademark of Philips Electronics.

PRODUCTION DATA information is current as of publication date. Products conform to specifications per the terms of the Texas Instruments standard warranty. Production processing does not necessarily include testing of all parameters.

Copyright © 2008–2009, Texas Instruments Incorporated

pdf.dzsc.com

查询"TLV320AIC3107"供应商

These devices have limited built-in ESD protection. The leads should be shorted together or the device placed in conductive foam during storage or handling to prevent electrostatic damage to the MOS gates.

DESCRIPTION (CONTINUED)

The high-power output drivers are capable of driving a variety of load configurations, including up to three channels of single-ended 16-Ω headphones using ac-coupling capacitors, or stereo 16-Ω headphones in a capacitorless output configuration. The mono class-D output is capable of differentially driving an 8-Ω speaker.

The stereo audio DAC supports sampling rates from 8 kHz to 96 kHz and includes programmable digital filtering in the DAC path for 3D, bass, treble, midrange effects, speaker equalization, and de-emphasis for 32-kHz, 44.1-kHz, and 48-kHz rates. The stereo audio ADC supports sampling rates from 8 kHz to 96 kHz and is preceded by programmable gain amplifiers or AGC that can provide up to 59.5 dB analog gain for low-level microphone inputs. The TLV320AIC3107 provides an extremely high range of programmability for both attack (8-1,408 ms) and for decay (0.05-22.4 seconds). This extended AGC range allows the AGC to be tuned for many types of applications.

For battery saving applications where neither analog nor digital signal processing are required, the device can be put in a special analog signal passthru mode. This mode significantly reduces power consumption, as most of the device is powered down during this pass through operation.

The serial control bus supports I^2C protocol, while the serial audio data bus is programmable for I^2S, left/right-justified, DSP, or TDM modes. A highly programmable PLL is included for flexible clock generation and support for all standard audio rates from a wide range of available MCLKs, varying from 512 kHz to 50 MHz, with special attention paid to the most popular cases of 12-MHz, 13-MHz, 16-MHz, 19.2-MHz, and 19.68-MHz system clocks.

The TLV320AIC3107 operates from an analog supply of 2.7 V–3.6 V, a digital core supply of 1.65 V–1.95 V, a digital I/O supply of 1.1 V–3.6 V, and a speaker amplifier supply of 2.7V–5.5V. The device is available in the 5 × 5-mm, 40-pin QFN package, and a 3.5 × 3-mm, 42-lead WCSP package.

Copyright © 2008–2009, Texas Instruments Incorporated

查询"TLV320AIC3107"供应商

TLV320AIC3107 SIMPLIFIED BLOCK DIAGRAM

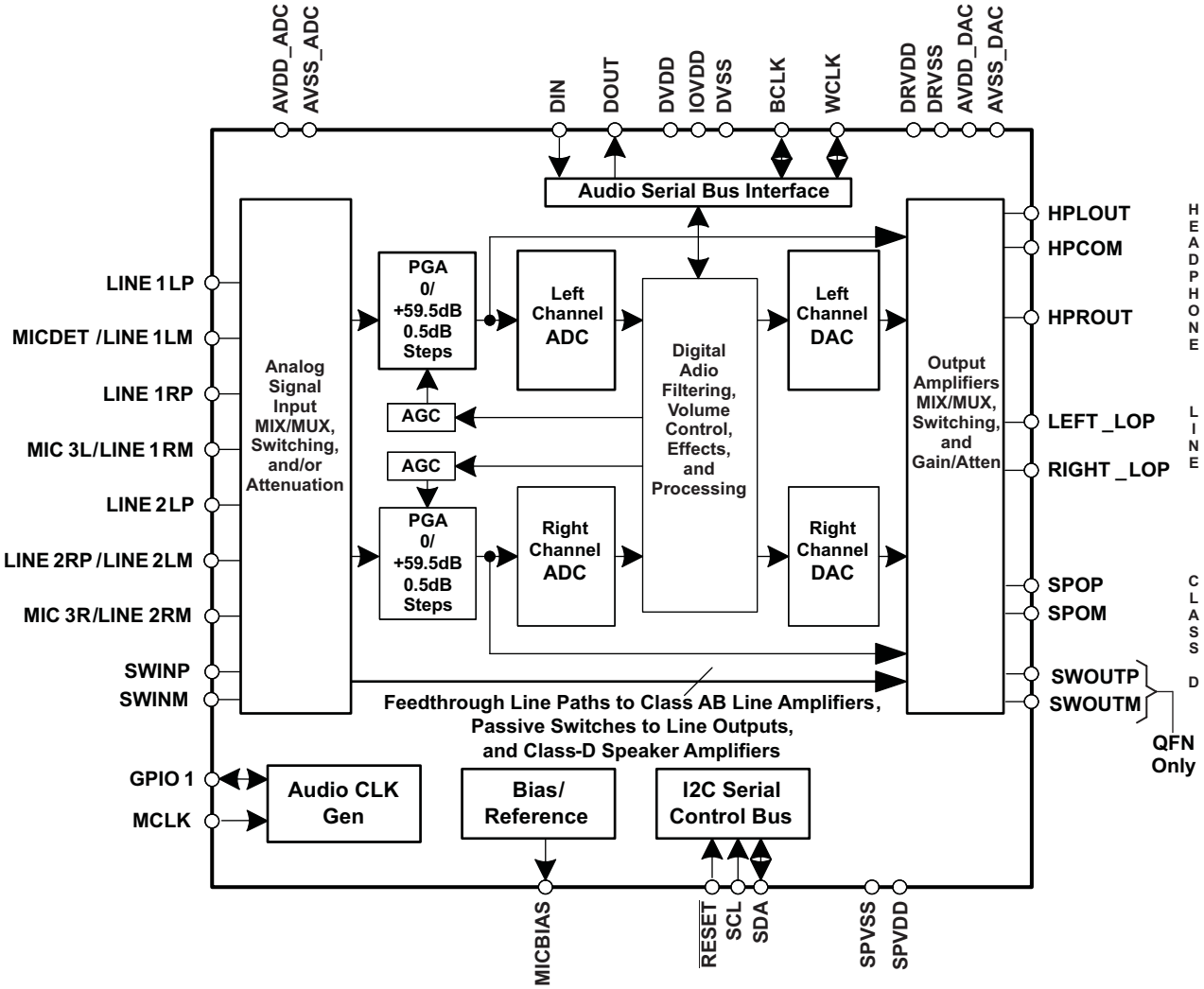

Connect QFN thermal pad to DRVSS.

PACKAGING/ORDERING INFORMATION(1)

PRODUCT	PACKAGE	PACKAGE DESIGNATOR	OPERATING TEMPERATURE RANGE	ORDERING NUMBER	TRANSPORT MEDIA, QUANTITY
TLV320AIC3107	WCSP-42	YZF	–40°C to 85°C	TLV320AIC3107IYZFT	Tape and Reel, 250
				TLV320AIC3107IYZFR	Tape and Reel, 3000
	QFN-40	RSB		TLV320AIC3107IRSBT	Tape and Reel, 250
				TLV320AIC3107IRSBR	Tape and Reel, 3000

(1) For the most current package and ordering information, see the Package Option Addendum at the end of this document, or see the TI website at www.ti.com.

Copyright © 2008–2009, Texas Instruments Incorporated

查询"TLV320AIC3107"供应商

PIN ASSIGNMENTS

	6	5	4	3	2	1	
A	MIC3R/LINE2RM	LINE2RP/LINE1LM	MIC3L/LINE1RM	LINE1LP	MICDET/LINE1LM	SCL	A
B	AVSS_ADC	MICBIAS	LINE2LP	LINE1RP	IOVDD	SDA	B
C	HPLOUT	DRVDD	AVDD_ADC	DVSS	DIN	DOUT	C
D	HPROUT	HPCOM	DRVSS	DVDD	BCLK	WCLK	D
E	LEFT_LOP	DRVDD	SWINM	SWINP	GPIO1	MCLK	E
F	RIGHT_LOP	AVDD_DAC	SPOM	SPOP	SPVSS	$\overline{\text{RESET}}$	F
G	AVSS_DAC	SPVSS	SPVDD	SPVSS	SPVSS	SPVSS	G
	6	5	4	3	2	1	

42-Ball, 6x7, TLV320AIC3107YZF
(Bottom View)

PIN FUNCTIONS

Pin			I/O	Description
QFN	WCSP	Name		
1	A1	SCL	I	I2C serial clock
2	B1	SDA	I/O	I2C serial data input/output
3	A2	MICDET/LINE1LM	I	MIC1 or Line1 analog input (left – or multifunctional) or Microphone detect
4	A3	LINE1LP	I	MIC1 or Line1 analog input (left + or multifunctional)
5	B3	LINE1RP	I	MIC1 or Line1 analog input (R + or multifunctional)
6	A4	MIC3L/LINE1RM	I	MIC3 or Line1 analog input (R - or multifunctional)
7	B4	LINE2LP	I	MIC2 or Line2 analog input (left + or multifunctional)
8	A5	LINE2RP/LINE2LM	I	MIC2 or Line2 analog input (left + or right - or multifunctional)
9	A6	MIC3R/LINE2RM	I	MIC3 or Line2 analog input (right + or multifunctional)
10	B5	MICBIAS	O	Microphone bias voltage output
11	B6	AVSS_ADC	G	ADC analog ground supply, 0 V
12	C4	AVDD_ADC	P	ADC analog voltage supply, 2.7 V–3.6 V
13	C5	DRVDD	P	High-power output driver analog voltage supply, 2.7 V–3.6 V
14	C6	HPLOUT	O	High-power output driver (left +)
15	D5	HPCOM	O	High-power output driver (left – or multifunctional)
16	D4	DRVSS	G	High-power output driver analog ground supply, 0 V
17	D6	HPROUT	O	High-power output driver (right +)
18	E5	DRVDD	P	High-power output driver analog voltage supply, 2.7 V–3.6 V
19	E6	LEFT_LOP	O	Left line output
20	F6	RIGHT_LOP	O	Right line output
21	F5	AVDD_DAC	P	DAC analog voltage supply, 2.7 V–3.6 V
22	G6	AVSS_DAC	G	DAC analog ground supply, 0 V
23	F4	SPOM	O	Class-D (or Bypass SW, WCSP only) negative differential output
24	F2, G1, G2, G3, G5	SPVSS	G	Class-D ground supply, 0 V
25	G4	SPVDD	P	Class-D voltage supply, 2.7 V–5.5 V
26	F3	SPOP	O	Class-D (or Bypass SW, WCSP only) positive differential output
27	E4	SWINM	I	Negative Bypass Switch Input

Copyright © 2008–2009, Texas Instruments Incorporated

查询"TLV320AIC3107"供应商

PIN FUNCTIONS (continued)

Pin			I/O	Description
QFN	WCSP	Name		
28		SWOUTM	O	Negative Bypass Switch Output, to be tied to SPOM externally
29		SWOUTP	O	Positive Bypass Switch Output, to be tied to SPOP externally
30	E3	SWINP	I	Positive Bypass Switch Input
31	F1	$\overline{\text{RESET}}$	I	Reset
32	E2	GPIO1	I/O	General-purpose input/output
33	D3	DVDD	P	Digital core voltage supply, 1.525 V–1.95 V
34	E1	MCLK	I	Master clock input
35	D2	BCLK	I/O	Audio serial data bus bit clock (input/output)
36	D1	WCLK	I/O	Audio serial data bus word clock (input/output)
37	C2	DIN	I	Audio serial data bus data input (input)
38	C1	DOUT	O	Audio serial data bus data output (output)
39	C3	DVSS	G	Digital core / I/O ground supply, 0 V
40	B2	IOVDD	P	I/O voltage supply, 1.1 V–3.6 V

Copyright © 2008–2009, Texas Instruments Incorporated

查询"TLV320AIC3107"供应商

ABSOLUTE MAXIMUM RATINGS

over operating free-air temperature range (unless otherwise noted)[(1) (2)]

		VALUE	UNIT
	AVDD_DAC to AVSS_DAC, DRVDD to DRVSS, AVSS_ADC	–0.3 to 3.9	V
	SPVDD to SPVSS	–0.3 to 6.0	V
	AVDD to DRVSS	–0.3 to 3.9	V
	IOVDD to DVSS	–0.3 to 3.9	V
	DVDD to DVSS	–0.3 to 2.5	V
	AVDD_DAC to DRVDD	–0.1 to 0.1	V
	Digital input voltage to DVSS	–0.3 to IOVDD + 0.3	V
	Analog input voltage to AVSS_ADC	–0.3 to AVDD + 0.3	V
	Operating temperature range	-40 to 85	°C
	Storage temperature range	-65 to 105	°C
T_J Max	Junction temperature	105	°C
	Power dissipation	$(T_J \text{ Max} – T_A)/\theta_{JA}$	
θ_{JA}	Thermal impedance, WCSP package	50	°C/W
	Thermal impedance, QFN package	34	°C/W

(1) Stresses beyond those listed under *absolute maximum ratings* may cause permanent damage to the device. These are stress ratings only, and functional operation of the device at these or any other conditions beyond those indicated under *recommended operating conditions* is not implied. Exposure to absolute-maximum-rated conditions for extended periods may affect device reliability.
(2) ESD compliance tested to EIA/JESD22-A114-B and passed.

DISSIPATION RATINGS[(1)]

PACKAGE TYPE	T_A = 25°C POWER RATING	DERATING FACTOR	T_A = 75°C POWER RATING	T_A = 85°C POWER RATING
WCSP	1.60 W	20 mW/°C	600 mW	400 mW
QFN	2.35 W	29.4 mW/° C	882 mW	588 mW

(1) This data was taken using 2 oz. trace and copper pad that is soldered directly to a JEDEC standard 4-layer 3 in × 3 in PCB.

RECOMMENDED OPERATING CONDITIONS

over operating free-air temperature range (unless otherwise noted)

		MIN	NOM	MAX	UNIT
AVDD_DAC, DRVDD[(1)]	Analog supply voltage	2.7	3.3	3.6	V
DVDD[(1)]	Digital core supply voltage	1.525	1.8	1.95	V
IOVDD[(1)]	Digital I/O supply voltage	1.1	1.8	3.6	V
SPVDD	Speaker Amplifier supply voltage	2.7	3.6	5.5	V
V_I	Analog full-scale 0 dB input voltage (DRVDD1 = 3.3 V) (Single Ended)		0.707		V_{RMS}
	Stereo line output load resistance	10			kΩ
	Stereo headphone output load resistance	16			Ω
	Digital output load capacitance		10		pF
T_A	Operating free-air temperature	–40		85	°C

(1) Analog voltage values are with respect to AVSS_ADC, AVSS_DAC, DRVSS; digital voltage values are with respect to DVSS.

 Copyright © 2008–2009, Texas Instruments Incorporated

查询"TLV320AIC3107"供应商

ELECTRICAL CHARACTERISTICS

At 25°C, AVDD_DAC = 3.3 V, DRVDD = 3.3 V, SPVDD = 5 V, IOVDD = 3.3 V, DVDD = 1.8 V, Fs = 48-kHz, 16-bit audio data (unless otherwise noted)

PARAMETER		TEST CONDITIONS	MIN	TYP	MAX	UNIT
AUDIO ADC						
	Input signal level (0 dB)	Single-ended input		0.707		V_{RMS}
	Signal-to-noise ratio, A-weighted (1) (2)	Fs = 48 ksps, 0 dB PGA gain, Inputs ac-shorted to ground	80	92		dB
	Dynamic range (2)	Fs = 48 ksps, 0 dB PGA gain, –60 dB full-scale input signal		91		dB
THD	Total harmonic distortion	Fs = 48 ksps, 0 dB PGA gain, –2dB full-scale 1kHz input signal		–88	–70	dB
	Power supply rejection ratio	217 Hz signal applied to DRVDD		49		dB
		1 kHz signal applied to DRVDD		46		
	Gain error	Fs = 48 ksps, 0 dB PGA gain, –2dB full-scale 1kHz input signal		0.84		dB
	Input channel separation	1 kHz, -2dB full-scale signal, MIC3L to MIC3R		-86		dB
		1 kHz, -2dB full-scale signal, MIC2L to MIC2R		-98		
		1 kHz, -2dB full-scale signal, MIC1L to MIC1R		-75		
	ADC programmable gain amplifier maximum gain	1-kHz input tone		59.5		dB
	ADC programmable gain amplifier step size			0.5		dB
	Input resistance	LINE1L inputs routed to single ADC Input mix attenuation = 0 dB		20		kΩ
		LINE1L inputs routed to single ADC, input mix attenuation = 12 dB		80		
		LINE2L inputs routed to single ADC Input mix attenuation = 0 dB		20		
		LINE2L inputs routed to single ADC, input mix attenuation = 12 dB		80		
	Input level control minimum attenuation setting			0		dB
	Input level control maximum attenuation setting			12		dB
	Input signal level	Differential Input		1.414		V_{RMS}
	Signal-to-noise ratio, A-weighted (1) (2)	Fs = 48 ksps, 0 dB PGA gain, Inputs ac-shorted to ground, Differential Mode		92		dB
THD	Total harmonic distortion	Fs = 48 ksps, 0 dB PGA gain, –2dB Full-scale 1kHz input signal, Differential Mode		–91		dB
ANALOG PASS THROUGH MODE						
	Input to output switch resistance, ($r_{DS(on)}$)	LINE1L to LEFT_LOP		330		Ω
		LINE1R to RIGHT_LOP		330		
		SWINP to SWOUTP		1		
		SWINM to SWOUTM		1		
ADC DIGITAL DECIMATION FILTER, Fs = 48 kHz						
	Filter gain from 0 to 0.39 Fs			±0.1		dB
	Filter gain at 0.4125 Fs			–0.25		dB
	Filter gain at 0.45 Fs			–3		dB
	Filter gain at 0.5 Fs			–17.5		dB
	Filter gain from 0.55 Fs to 64 Fs			–75		dB
	Filter group delay			17/Fs		s

(1) Ratio of output level with 1-kHz full-scale sine-wave input, to the output level with the inputs short circuited, measured A-weighted over a 20-Hz to 20-kHz bandwidth using an audio analyzer.
(2) All performance measurements done with 20-kHz low-pass filter and, where noted, A-weighted filter. Failure to use such a filter may result in higher THD+N and lower SNR and dynamic range readings than shown in the Electrical Characteristics. The low-pass filter removes out-of-band noise, which, although not audible, may affect dynamic specification values.

Copyright © 2008–2009, Texas Instruments Incorporated

查询"TLV320AIC3107"供应商

ELECTRICAL CHARACTERISTICS (continued)

At 25°C, AVDD_DAC = 3.3 V, DRVDD = 3.3 V, SPVDD = 5 V, IOVDD = 3.3 V, DVDD = 1.8 V, Fs = 48-kHz, 16-bit audio data (unless otherwise noted)

PARAMETER	TEST CONDITIONS	MIN	TYP	MAX	UNIT
MICROPHONE BIAS					
Bias voltage	Programmable setting = 2.0		2		V
	Programmable setting = 2.5	2.3	2.5	2.7	
	Programmable setting = DRVDD		DRVDD		
Current sourcing	Programmable setting = 2.5V		4		mA
AUDIO DAC - SINGLE ENDED LINE OUTPUT, LOAD = 10 kΩ					
Full-scale output voltage	0 dB Input full-scale signal, output volume control = 0 dB, Output common mode setting = 1.35 V		0.707		Vrms
Signal-to-noise ratio, A-weighted	No input signal, output volume control = 0 dB, Output common mode setting = 1.35 V, Fs = 48 kHz		97		dB
Total harmonic distortion	0 dB 1 kHz input full-scale signal, Output volume control = 0 dB, Output common mode setting = 1.35 V, Fs = 48 kHz		-84	-70	dB
DAC Gain Error	0 dB 1 kHz input full-scale signal, Output volume control = 0 dB, Output common mode setting = 1.35 V, Fs = 48 kHz		-0.8		dB
AUDIO DAC - SINGLE ENDED HEADPHONE OUTPUT, LOAD = 16 Ω					
Full-scale output voltage	0 dB Input full-scale signal, Output volume control = 0 dB, Output common mode setting = 1.35 V		0.707		Vrms
Signal-to-noise ratio, A-weighted	No input signal, output volume control = 0 dB, Output common mode setting = 1.35 V, Fs = 48 kHz		95		dB
	No input signal, output volume control = 0 dB, Output common mode setting = 1.35 V, Fs = 48 kHz, 50% DAC Current Boost Mode		96		dB
Dynamic range, A-weighted	–60 dB 1 kHz input full-scale signal, Output volume control = 0 dB, Output common mode setting = 1.35 V, Fs = 48 kHz		92		dB
Total harmonic distortion	0 dB 1 kHz input full-scale signal, Output volume control = 0 dB, Output common mode setting = 1.35 V, Fs = 48 kHz		-84	-65	dB
Power supply rejection ratio	217 Hz Signal applied to DRVDD, AVDD_DAC		41		dB
	1 kHz Signal applied to DRVDD, AVDD_DAC		44		
DAC channel separation	0 dB Full-scale input signal between left and right Lineout		84		dB
DAC Gain Error	0 dB 1 kHz input full-scale signal, Output volume control = 0 dB, Output common mode setting = 1.35 V, Fs = 48 kHz		-1		dB
AUDIO DAC - LINEOUT AND HEADPHONE OUT DRIVERS					
Output common mode	First option		1.35		V
	Second option		1.5		
	Third option		1.65		
	Fourth option		1.8		
Output volume control max setting			9		dB
Output volume control step size			1		dB

Copyright © 2008–2009, Texas Instruments Incorporated

查询"TLV320AIC3107"供应商

ELECTRICAL CHARACTERISTICS (continued)

At 25°C, AVDD_DAC = 3.3 V, DRVDD = 3.3 V, SPVDD = 5 V, IOVDD = 3.3 V, DVDD = 1.8 V, Fs = 48-kHz, 16-bit audio data (unless otherwise noted)

PARAMETER		TEST CONDITIONS	MIN	TYP	MAX	UNIT
SPEAKER AMPLIFIER OUTPUT, LOAD = 8 Ω						
	Full-scale output voltage	1 kHz, 0dB full-scale input signal, Output volume control for left line output = 0 dB, for class-D = 0 dB Output common mode setting = 1.35 V, Fs = 48 kHz		2.5		Vrms
	Output voltage	1 kHz, 0dB full-scale input signal, Output volume control for left line output = -4.5 dB, for class-D = 6 dB Output common mode setting = 1.35 V, Fs = 48 kHz		2.875		Vrms
	Idle Channel Noise	No input signal, output gain control = 0 dB		-92		dB
	Dynamic range, A-weighted	1 kHz,–60 dB full-scale input signal, Output volume control for left line output = 0 dB, for class-D = 0 dB Output common mode setting = 1.35 V, Fs = 48 kHz		91		dB
	Total harmonic distortion	1 kHz, 0 dB full-scale input signal, Output volume control for left line output = –4.5 dB, for class-D = 6 dB Output common mode setting = 1.35 V, Fs = 48 kHz, 1 W output power		1.77% -35		dB
	Total harmonic distortion	1 kHz, –6 dB full-scale input signal, Output volume control for left line output = –4.5 dB, for class-D = 6 dB Output common mode setting = 1.35 V, Fs = 48 kHz, 250 mW output power		0.056% -65	0.316% -50	dB
	Power supply rejection ratio	217 Hz Signal applied to SPVDD		37		dB
		1 kHz Signal applied to SPVDD		33		
	Gain Error	1 kHz, 0 dB input full-scale signal, Output volume control = 0 dB, Output common mode setting = 1.35 V, Fs = 48 kHz		-1.6		dB
DAC DIGITAL INTERPOLATION – FILTER Fs = 48-ksps						
	Passband		0		0.45 × Fs	Hz
	Passband ripple			±0.06		dB
	Transition band		0.45 × Fs		0.55 × Fs	Hz
	Stopband		0.55 × Fs		7.5 × Fs	Hz
	Stopband attenuation			65		dB
	Group delay			21/Fs		s
DIGITAL I/O						
V_{IL}	Input low level		–0.3		0.3 × IOVDD	V
V_{IH}	Input high level(3)	IOVDD > 1.6 V	0.7 × IOVDD			V
		IOVDD < 1.6 V	1.1			
V_{OL}	Output low level				0.1 × IOVDD	V
V_{OH}	Output high level		0.8 × IOVDD			V

(3) When IOVDD < 1.6V, minimum V_{IH} is 1.1V.

查询"TLV320AIC3107"供应商

ELECTRICAL CHARACTERISTICS (continued)

At 25°C, AVDD_DAC = 3.3 V, DRVDD = 3.3 V, SPVDD = 5 V, IOVDD = 3.3 V, DVDD = 1.8 V, Fs = 48-kHz, 16-bit audio data (unless otherwise noted)

PARAMETER	TEST CONDITIONS		MIN	TYP	MAX	UNIT
POWER CONSUMPTION, DRVDD, AVDD_DAC = 3.3 V, SPVDD = 5V, DVDD = 1.8 V, IOVDD = 3.3 V						
	IDRVDD+IAVDD_DAC	RESET Held low		0.1		µA
	IDVDD			0.2		
	IDRVDD+IAVDD_DAC	Mono ADC record, Fs = 8 ksps, I2S Slave, AGC Off, No signal		2.1		mA
	IDVDD			0.5		
	IDRVDD+IAVDD_DAC	Stereo ADC record, Fs = 8 ksps, I2S Slave, AGC Off, No signal		4.1		mA
	IDVDD			0.6		
	IDRVDD+IAVDD_DAC	Stereo ADC record, Fs = 48 ksps, I2S Slave, AGC Off, No signal		4.3		mA
	IDVDD			2.5		
	IDRVDD+IAVDD_DAC	Stereo DAC Playback to Lineout , Analog mixer bypassed Fs = 48 ksps, I2S Slave		3.5		mA
	IDVDD			2.3		
	IDRVDD+IAVDD_DAC	Stereo DAC Playback to Lineout, Fs = 48 ksps, I2S Slave, No signal		4.9		mA
	IDVDD			2.3		
	IDRVDD+IAVDD_DAC	Stereo DAC Playback to stereo single-ended headphone, Fs = 48 ksps, I2S Slave, No signal		6.7		mA
	IDVDD			2.3		
	IDRVDD+IAVDD_DAC	Stereo LINEIN to stereo LINEOUT, No signal		3.1		mA
	IDVDD			0		
	IDRVDD+IAVDD_DAC	Extra power when PLL enabled		1.4		mA
	IDVDD			0.9		
	IDRVDD+IAVDD_DAC	All blocks powered down, Headset detection enabled		28		µA
	IDVDD			2		
	SPVDD	class-D disabled		200		nA

Copyright © 2008–2009, Texas Instruments Incorporated

查询"TLV320AIC3107"供应商

AUDIO DATA SERIAL INTERFACE TIMING DIAGRAMS

All specifications at 25°C, DVDD = 1.8 V

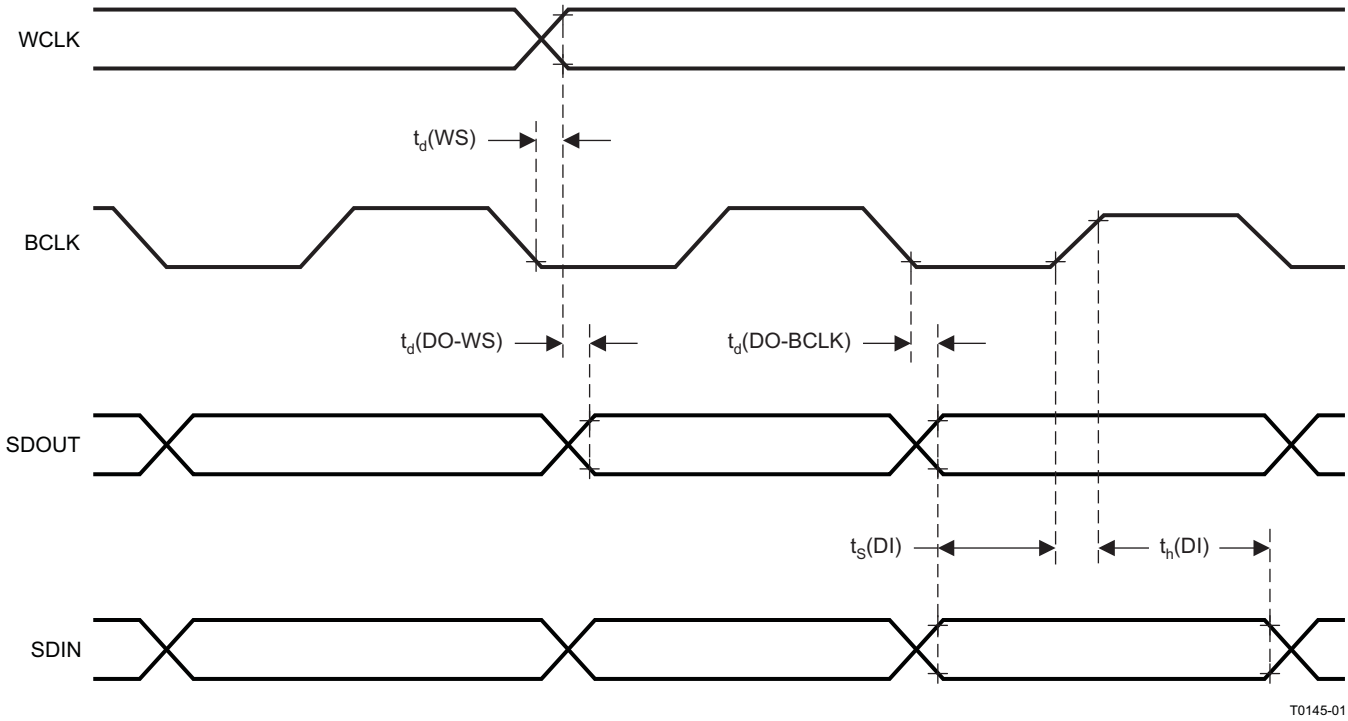

PARAMETER		IOVDD = 1.1 V		IOVDD = 3.3 V		UNIT
		MIN	MAX	MIN	MAX	
t_d(WS)	ADWS/WCLK delay time		50		15	ns
t_d(DO-WS)	ADWS/WCLK to DOUT delay time		50		20	ns
t_d(DO-BCLK)	BCLK to DOUT delay time		50		15	ns
t_s(DI)	DIN setup time	10		6		ns
t_h(DI)	DIN hold time	10		6		ns
t_r	Rise time		30		10	ns
t_f	Fall time		30		10	ns

NOTE: All timing specifications are measured at characterization but not tested at final test.

Figure 1. I²S/LJF/RJF Timing in Master Mode

Copyright © 2008–2009, Texas Instruments Incorporated

查询"TLV320AIC3107"供应商

All specifications at 25°C, DVDD = 1.8 V

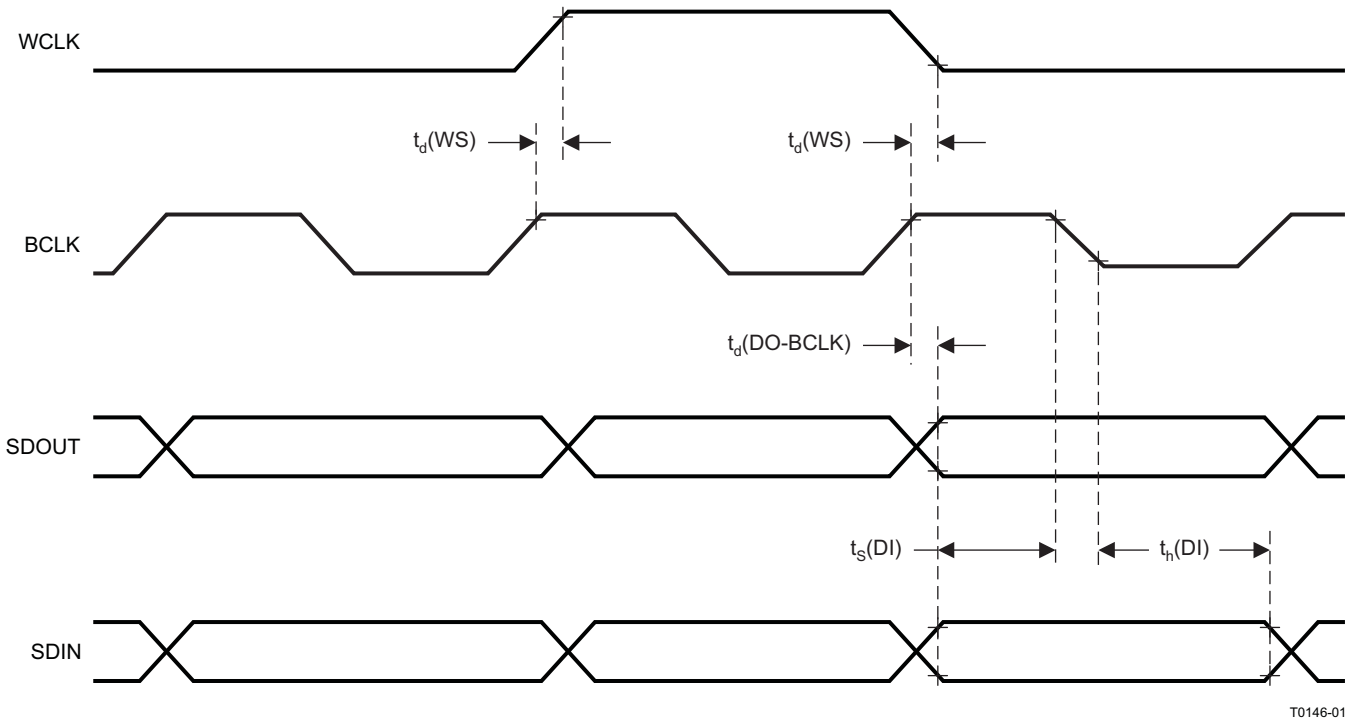

PARAMETER		IOVDD = 1.1 V		IOVDD = 3.3 V		UNIT
		MIN	MAX	MIN	MAX	
t_d(WS)	ADWS/WCLK delay time		50		15	ns
t_d(DO-BCLK)	BCLK to DOUT delay time		50		15	ns
t_s(DI)	DIN setup time	10		6		ns
t_h(DI)	DIN hold time	10		6		ns
t_r	Rise time		30		10	ns
t_f	Fall time		30		10	ns

NOTE: All timing specifications are measured at characterization but not tested at final test.

Figure 2. DSP Timing in Master Mode

Copyright © 2008–2009, Texas Instruments Incorporated

查询"TLV320AIC3107"供应商

All specifications at 25°C, DVDD = 1.8 V

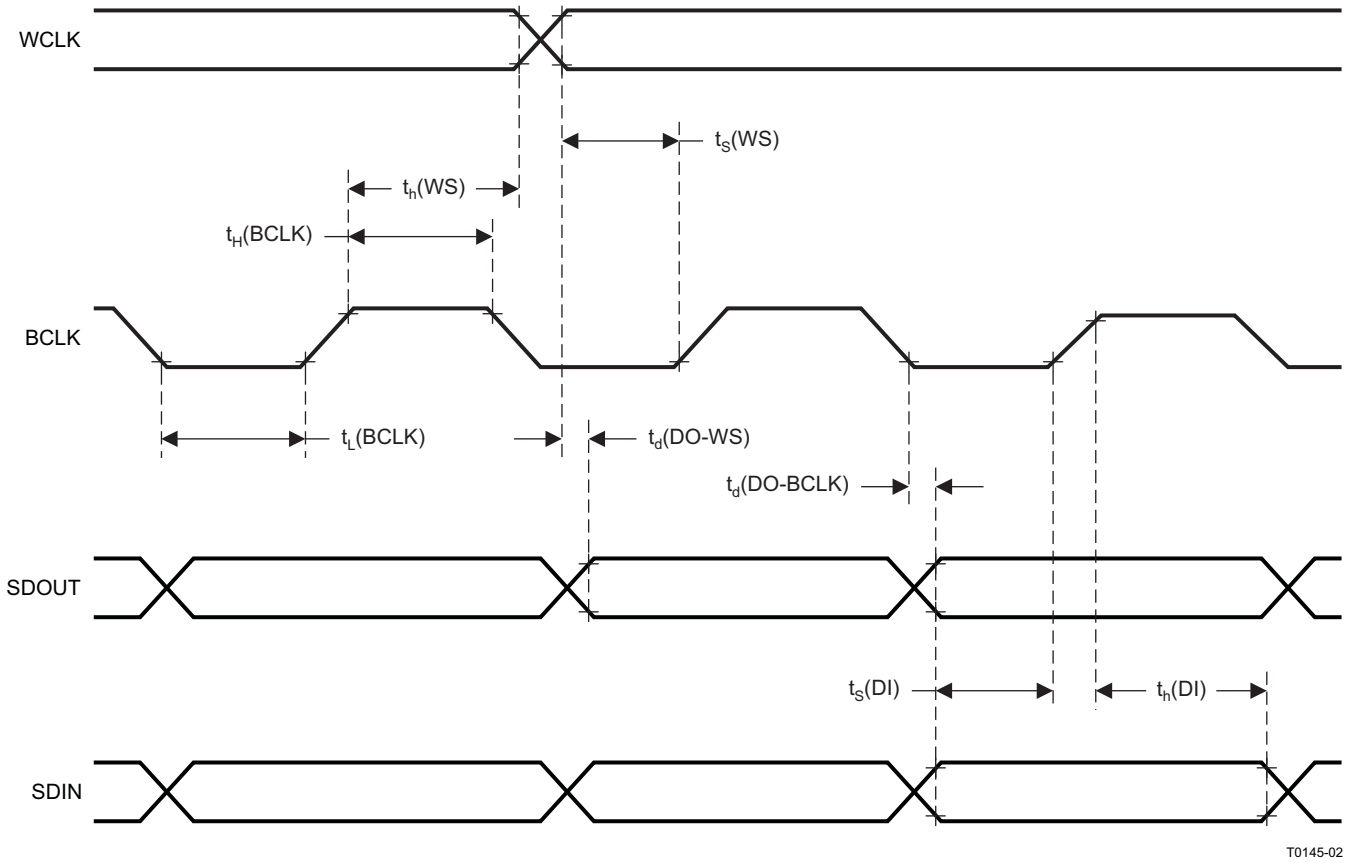

PARAMETER		IOVDD = 1.1 V		IOVDD = 3.3 V		UNIT
		MIN	MAX	MIN	MAX	
t_P(BCLK)	BCLK clock period					ns
t_H(BCLK)	BCLK high period	70		35		ns
t_L(BCLK)	BCLK low period	70		35		ns
t_s(WS)	ADWS/WCLK setup time	10		6		ns
t_h(WS)	ADWS/WCLK hold time	10		6		ns
t_d(DO-WS)	ADWS/WCLK to DOUT delay time (for LJF Mode only)		25		35	ns
t_d(DO-BCLK)	BCLK to DOUT delay time		50		20	ns
t_s(DI)	DIN setup time	10		6		ns
t_h(DI)	DIN hold time	10		6		ns
t_r	Rise time		8		4	ns
t_f	Fall time		8		4	ns

NOTE: All timing specifications are measured at characterization but not tested at final test.

Figure 3. I²S/LJF/RJF Timing in Slave Mode

查询"TLV320AIC3107"供应商

All specifications at 25°C, DVDD = 1.8 V

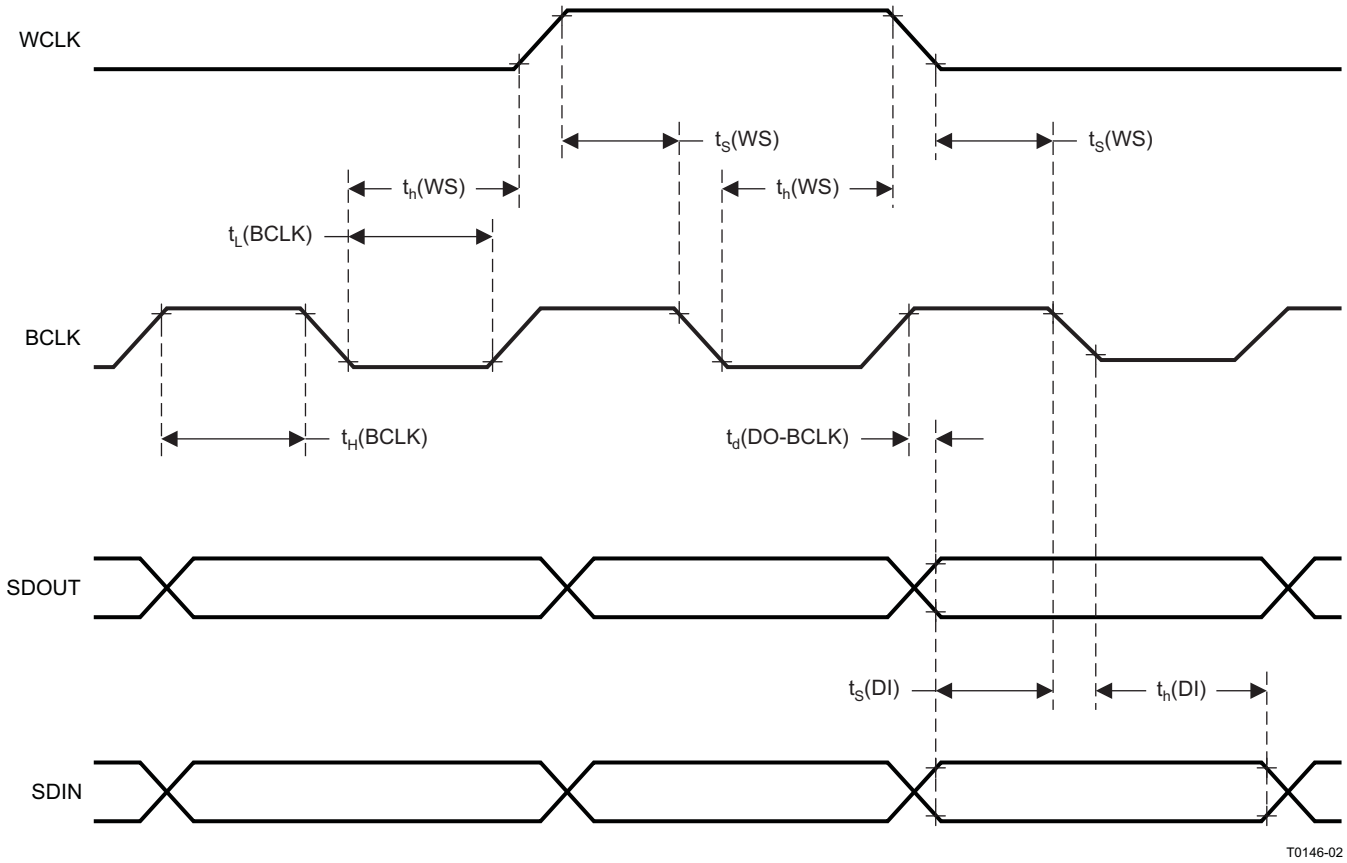

PARAMETER		IOVDD = 1.1 V		IOVDD = 3.3 V		UNIT
		MIN	MAX	MIN	MAX	
t_P(BCLK)	BCLK clock period					ns
t_H(BCLK)	BCLK high period	70		35		ns
t_L(BCLK)	BCLK low period	70		35		ns
t_s(WS)	ADWS/WCLK setup time	10		8		ns
t_h(WS)	ADWS/WCLK hold time	10		8		ns
t_d(DO-BCLK)	BCLK to DOUT delay time		50		20	ns
t_s(DI)	DIN setup time	10		6		ns
t_h(DI)	DIN hold time	10		6		ns
t_r	Rise time		8		4	ns
t_f	Fall time		8		4	ns

NOTE: All timing specifications are measured at characterization but not tested at final test.

Figure 4. DSP Timing in Slave Mode

Copyright © 2008–2009, Texas Instruments Incorporated

查询"TLV320AIC3107"供应商

TYPICAL CHARACTERISTICS

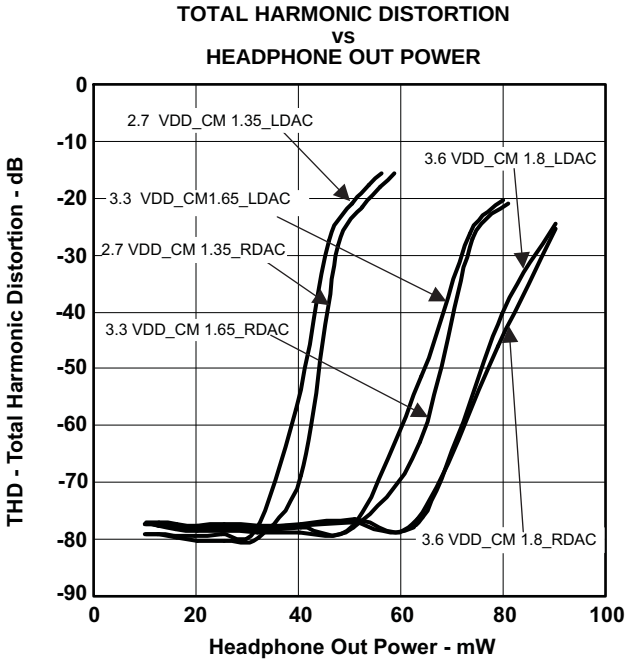

Figure 5.

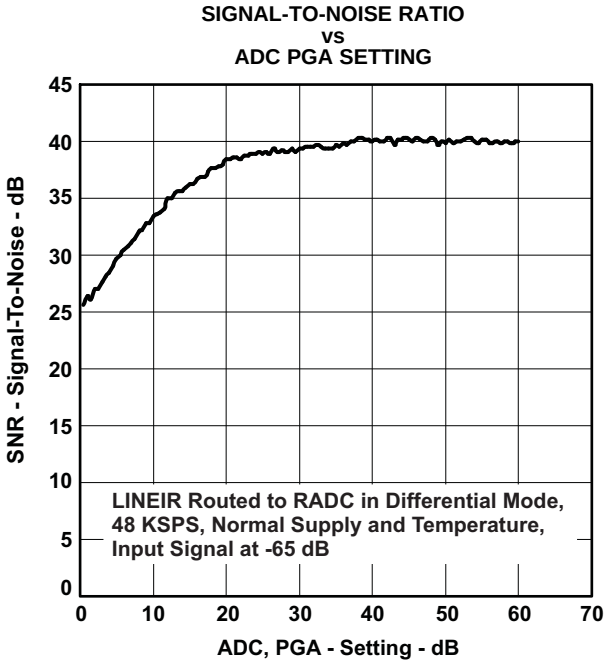

Figure 6.

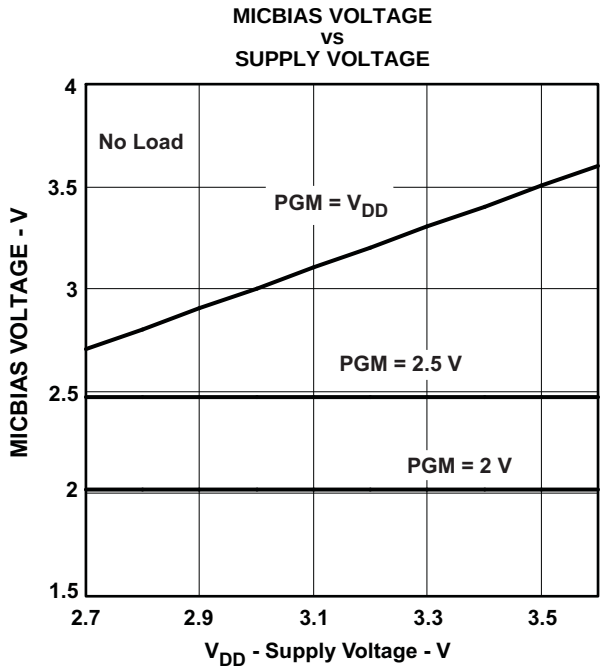

Figure 7.

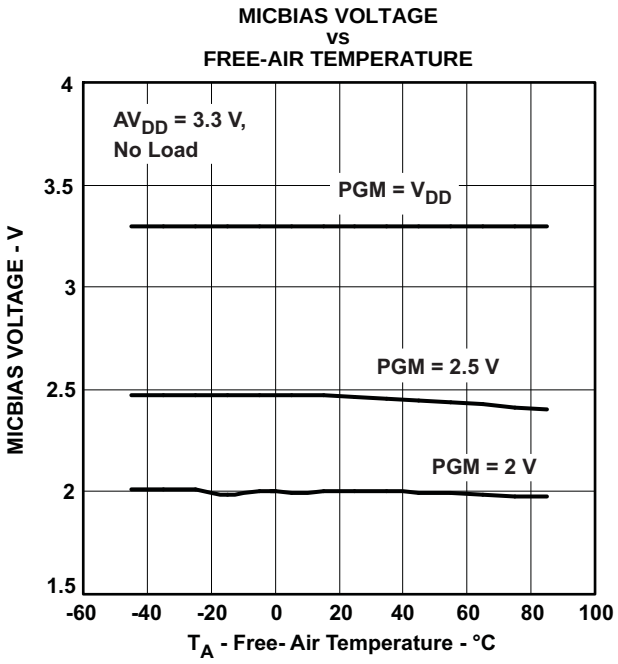

Figure 8.

查询"TLV320AIC3107"供应商

TYPICAL CHARACTERISTICS (continued)

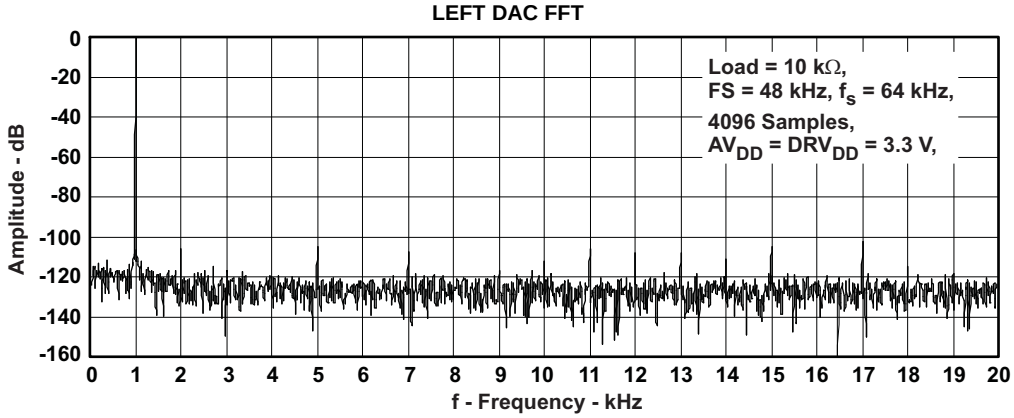

Figure 9.

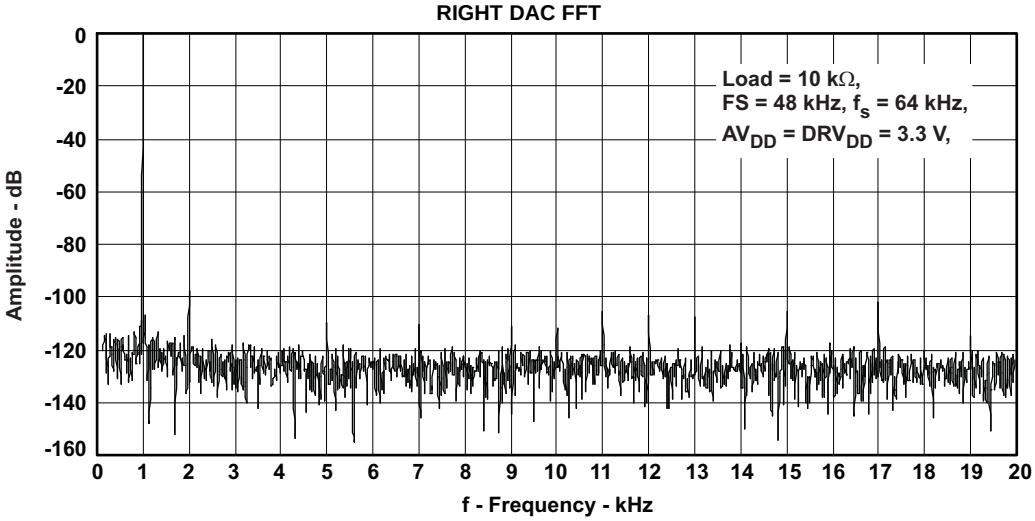

Figure 10.

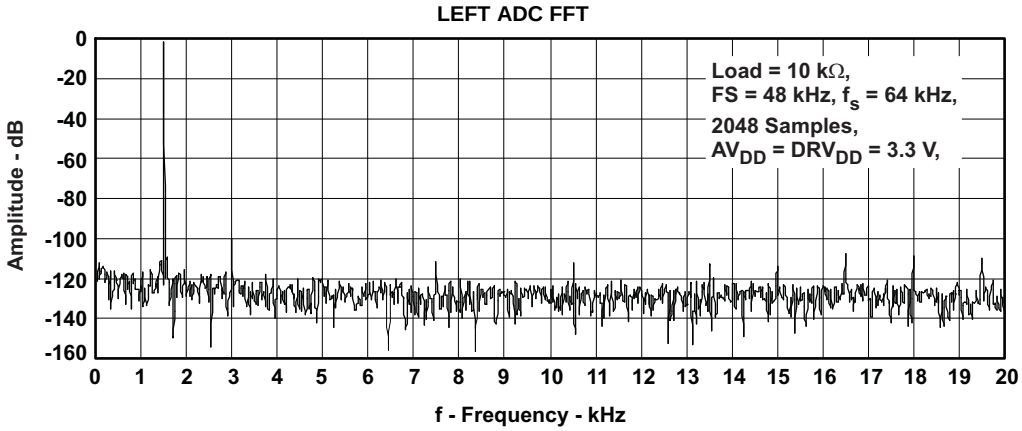

Figure 11.

Copyright © 2008–2009, Texas Instruments Incorporated

查询"TLV320AIC3107"供应商

TYPICAL CHARACTERISTICS (continued)

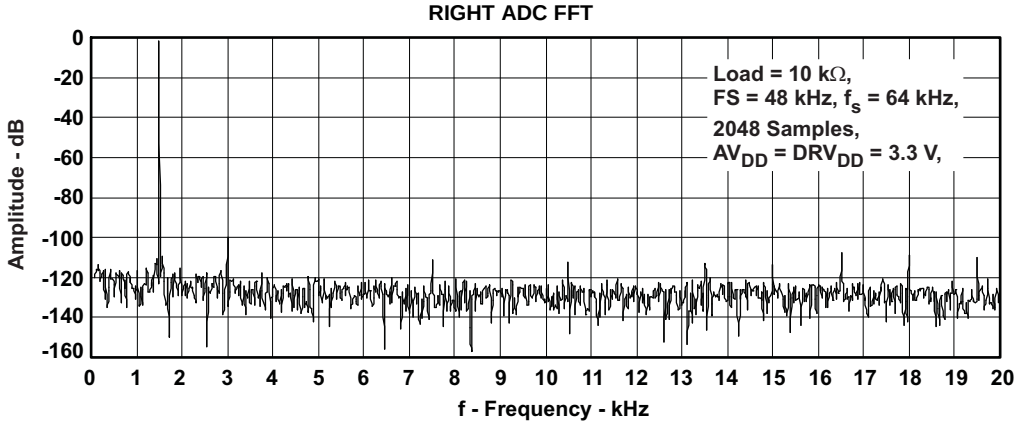

Figure 12.

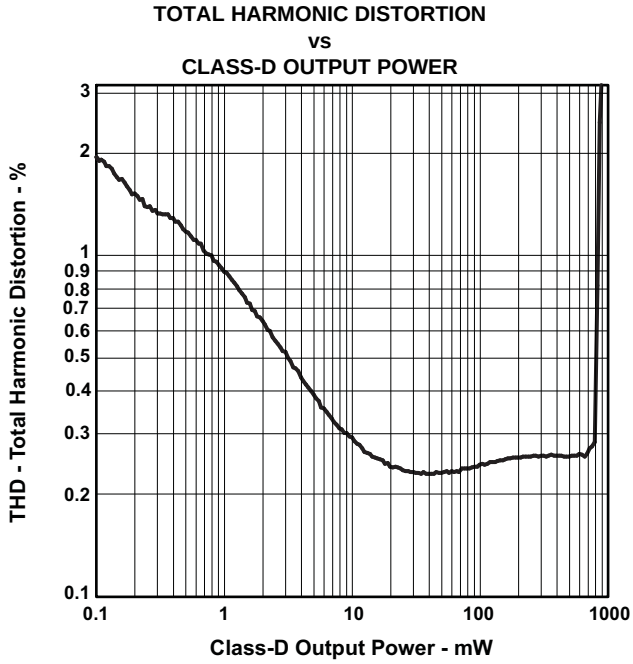

Figure 13.

查询"TLV320AIC3107"供应商

TYPICAL CHARACTERISTICS (continued)

TYPICAL CIRCUIT CONFIGURATION

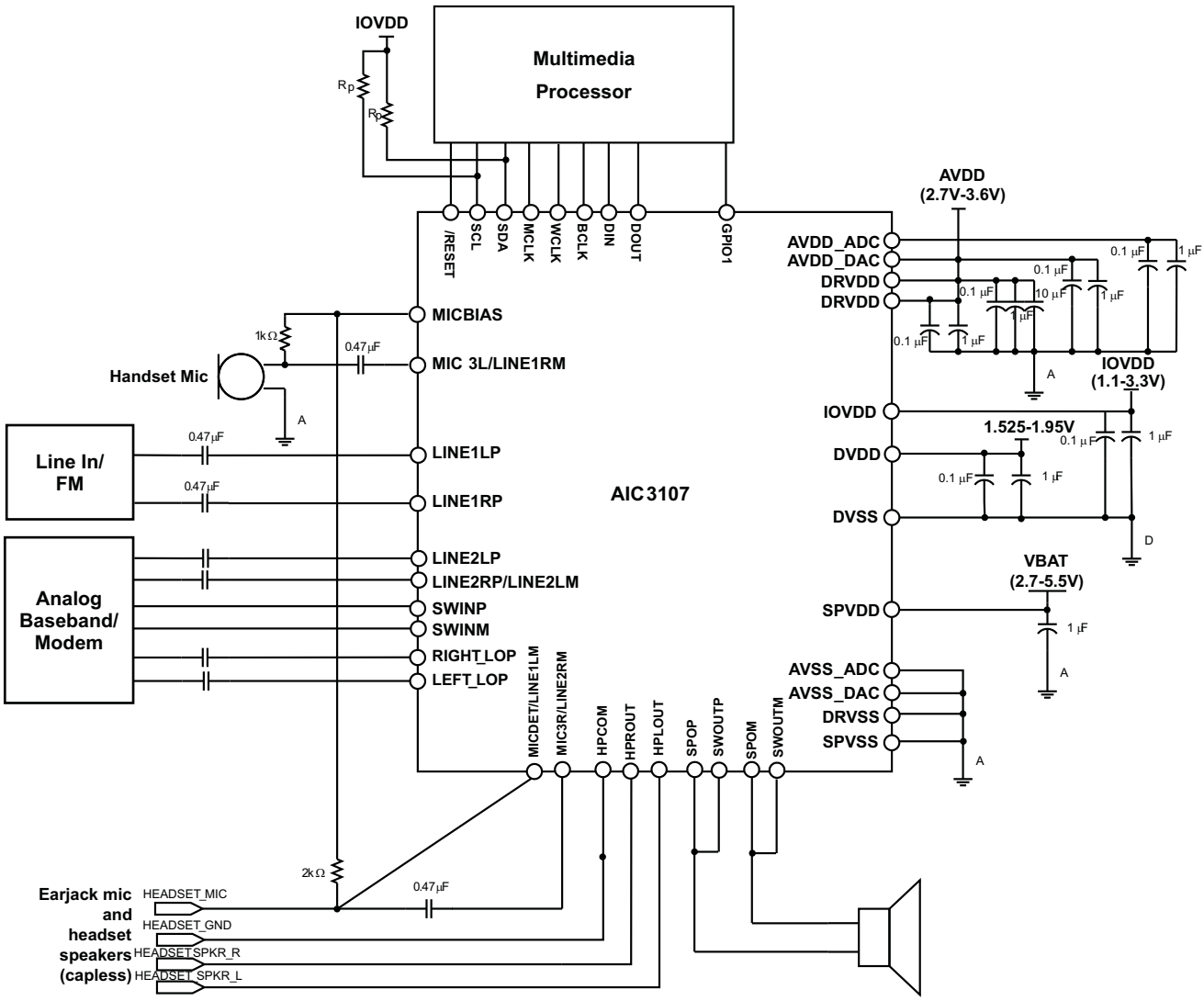

Figure 14. Typical Connections for Capless Headphone and External Speaker Amp

Copyright © 2008–2009, Texas Instruments Incorporated

查询"TLV320AIC3107"供应商

OVERVIEW

The TLV320AIC3107 is a highly flexible, low power, stereo audio codec with extensive feature integration, intended for applications in smartphones, PDAs, and portable computing, communication, and entertainment applications. Available in a 5x5mm 40-lead QFN, the product integrates a host of features to reduce cost, board space, and power consumption in space-constrained, battery-powered, portable applications.

The TLV320AIC3107 consists of the following blocks:

- Stereo audio multi-bit delta-sigma DAC (8 kHz–96 kHz)
- Stereo audio multi-bit delta-sigma ADC (8 kHz–96 kHz)
- Programmable digital audio effects processing (3-D, bass, treble, mid-range, EQ, notch filter, de-emphasis)
- Seven audio inputs
- Three high-power audio output drivers (headphone drive capability)
- Two single-ended line output drivers
- Fully programmable PLL
- Headphone/headset jack detection with interrupt
- Differential Class-D speaker driver

Communication to the TLV320AIC3107 for control is via I^2C. The I^2C interface supports both standard and fast communication modes.

HARDWARE RESET

The TLV320AIC3107 requires a hardware reset after power-up for proper operation. After all power supplies are at their specified values, the $\overline{\text{RESET}}$ pin must be driven low for at least 10 ns. If this reset sequence is not performed, the 'AIC3107 may not respond properly to register reads/writes.

I^2C CONTROL MODE

The TLV320AIC3107 supports the I^2C control protocol using 7-bit addressing, and is capable of both standard and fast modes. The TLV320AIC3107 responds to the I^2C address of 001 1000. For I^2C fast mode, note that the minimum timing for each of $t_{HD\text{-}STA}$, $t_{SU\text{-}STA}$, and $t_{SU\text{-}STO}$ is 0.9 µs, as seen in Figure 15.

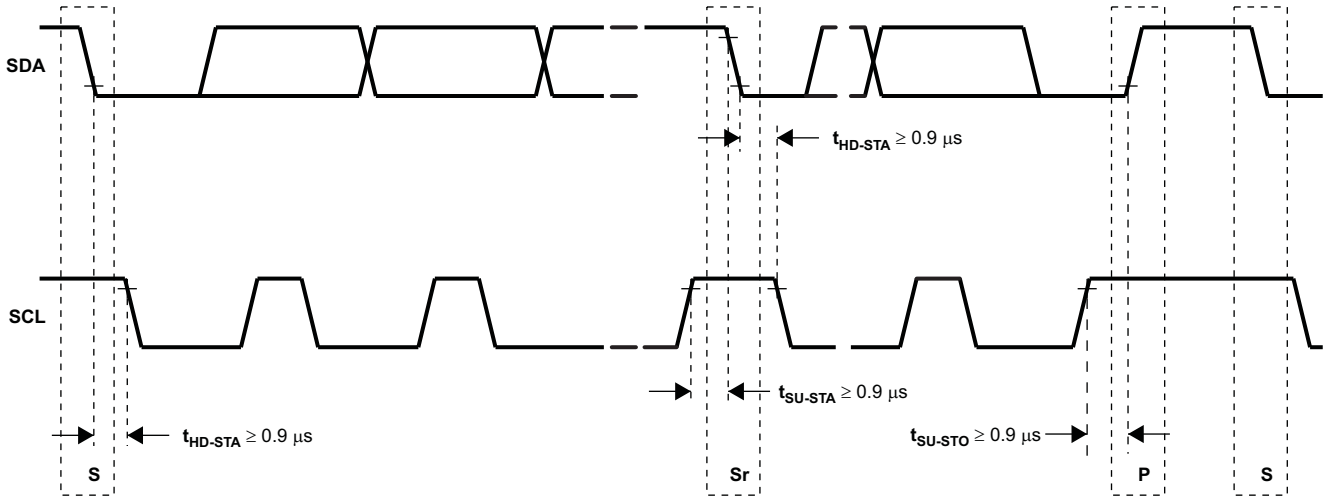

Figure 15. I2C Fast-Mode Timing Requirements

I^2C is a two-wire, open-drain interface supporting multiple devices and masters on a single bus. Devices on the I^2C bus only drive the bus lines LOW by connecting them to ground; they never drive the bus lines HIGH. Instead, the bus wires are pulled HIGH by pull-up resistors, so the bus wires are HIGH when no device is driving them LOW. This way, two devices cannot conflict; if two devices drive the bus simultaneously, there is no driver contention.

Copyright © 2008–2009, Texas Instruments Incorporated

查询"TLV320AIC3107"供应商

Communication on the I^{2}C bus always takes place between two devices, one acting as the master and the other acting as the slave. Both masters and slaves can read and write, but slaves can only do so under the direction of the master. Some I^{2}C devices can act as masters or slaves, but the TLV320AIC3107 can only act as a slave device.

An I^{2}C bus consists of two lines, SDA and SCL. SDA carries data; SCL provides the clock. All data is transmitted across the I^{2}C bus in groups of eight bits. To send a bit on the I^{2}C bus, the SDA line is driven to the appropriate level while SCL is LOW (a LOW on SDA indicates the bit is zero; a HIGH indicates the bit is one). Once the SDA line has settled, the SCL line is brought HIGH, then LOW. This pulse on SCL clocks the SDA bit into the receivers shift register.

The I^{2}C bus is bidirectional: the SDA line is used both for transmitting and receiving data. When a master reads from a slave, the slave drives the data line; when a master sends to a slave, the master drives the data line. Under normal circumstances the master drives the clock line.

Most of the time the bus is idle, no communication is taking place, and both lines are HIGH. When communication is taking place, the bus is active. Only master devices can start a communication. They do this by causing a START condition on the bus. Normally, the data line is only allowed to change state while the clock line is LOW. If the data line changes state while the clock line is HIGH, it is either a START condition or its counterpart, a STOP condition. A START condition is when the clock line is HIGH and the data line goes from HIGH to LOW. A STOP condition is when the clock line is HIGH and the data line goes from LOW to HIGH.

After the master issues a START condition, it sends a byte that indicates which slave device it wants to communicate with. This byte is called the address byte. Each device on an I^{2}C bus has a unique 7-bit address to which it responds. (Slaves can also have 10-bit addresses; see the I^{2}C specification for details.) The master sends an address in the address byte, together with a bit that indicates whether it wishes to read from or write to the slave device.

Every byte transmitted on the I^{2}C bus, whether it is address or data, is acknowledged with an acknowledge bit. When a master has finished sending a byte (eight data bits) to a slave, it stops driving SDA and waits for the slave to acknowledge the byte. The slave acknowledges the byte by pulling SDA LOW. The master then sends a clock pulse to clock the acknowledge bit. Similarly, when a master has finished reading a byte, it pulls SDA LOW to acknowledge this to the slave. It then sends a clock pulse to clock the bit.

A not-acknowledge is performed by simply leaving SDA HIGH during an acknowledge cycle. If a device is not present on the bus, and the master attempts to address it, it will receive a not−acknowledge because no device is present at that address to pull the line LOW.

When a master has finished communicating with a slave, it may issue a STOP condition. When a STOP condition is issued, the bus becomes idle again. A master may also issue another START condition. When a START condition is issued while the bus is active, it is called a repeated START condition.

The TLV320AIC3107 also responds to and acknowledges a General Call, which consists of the master issuing a command with a slave address byte of 00H.

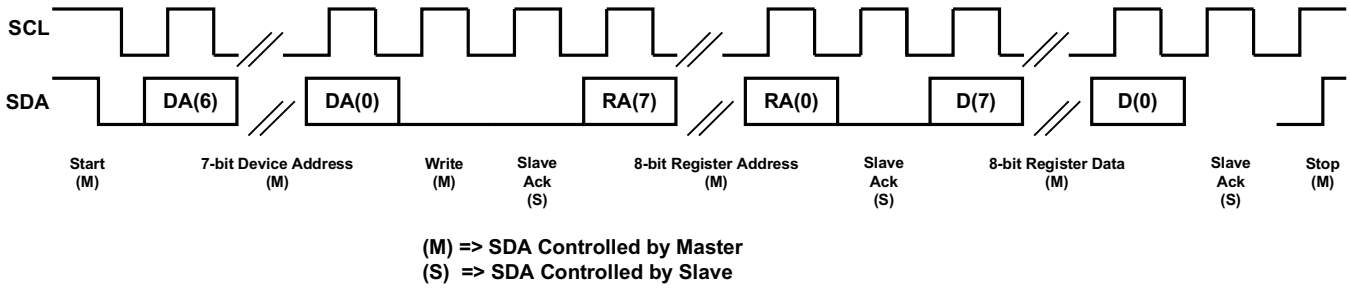

Figure 16. I^{2}C Write

Copyright © 2008–2009, Texas Instruments Incorporated

查询"TLV320AIC3107"供应商

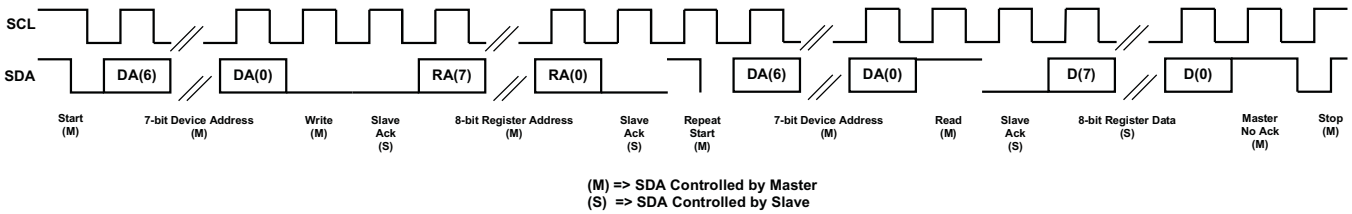

Figure 17. I²C Read

In the case of an I²C register write, if the master does not issue a STOP condition, then the device enters auto-increment mode. So in the next eight clocks, the data on SDA is treated as data for the next incremental register.

Similarly, in the case of an I²C register read, after the device has sent out the 8-bit data from the addressed register, if the master issues an ACKNOWLEDGE, the slave takes over control of SDA bus and transmit for the next 8 clocks the data of the next incremental register.

I²C BUS DEBUG IN A GLITCHED SYSTEM

Occasionally, some systems may encounter noise or glitches on the I²C bus. In the unlikely event that this affects bus performance, then it can be useful to use the I²C Debug register. This feature terminates the I²C bus error allowing this I²C device and system to resume communications. The I²C bus error detector is enabled by default. The TLV320AIC3107 I²C error detector status can be read from Page 0, Register 107, bit D0. If desired, the detector can be disabled by writing to Page 0, Register 107, bit D2.

DIGITAL AUDIO DATA SERIAL INTERFACE

Audio data is transferred between the host processor and the TLV320AIC3107 via the digital audio data serial interface, or *audio bus*. The audio bus on this device is flexible, including left or right justified data options, support for I²S or PCM protocols, programmable data length options, a TDM mode for multichannel operation, flexible master/slave configurability for each bus clock line, and the ability to communicate with multiple devices within a system directly.

The audio bus of the TLV320AIC3107 can be configured for left or right justified, I²S, DSP, or TDM modes of operation, where communication with standard telephony PCM interfaces is supported within the TDM mode. These modes are all MSB-first, with data width programmable as 16, 20, 24, or 32 bits. In addition, the word clock (WCLK or GPIO1) and bit clock (BCLK) can be independently configured in either Master or Slave mode, for flexible connectivity to a wide variety of processors

The word clock (WCLK or GPIO1) is used to define the beginning of a frame, and may be programmed as either a pulse or a square-wave signal. The frequency of this clock corresponds to the maximum of the selected ADC and DAC sampling frequencies.

The bit clock (BCLK) is used to clock in and out the digital audio data across the serial bus. When in Master mode, this signal can be programmed in two further modes: continuous transfer mode, and 256-clock mode. In continuous transfer mode, only the minimal number of bit clocks needed to transfer the audio data are generated, so in general the number of bit clocks per frame will be two times the data width. For example, if data width is chosen as 16-bits, then 32 bit clocks will be generated per frame. If the bit clock signal in master mode will be used by a PLL in another device, it is recommended that the 16-bit or 32-bit data width selections be used. These cases result in a low jitter bit clock signal being generated, having frequencies of 32×Fs or 64×Fs. In the cases of 20-bit and 24-bit data width in master mode, the bit clocks generated in each frame will not all be of equal period, due to the device not having a clean 40×Fs or 48×Fs clock signal readily available. The average frequency of the bit clock signal is still accurate in these cases (being 40×Fs or 48×Fs), but the resulting clock signal has higher jitter than in the 16-bit and 32-bit cases.

In 256-clock mode, a constant 256 bit clocks per frame are generated, independent of the data width chosen. The TLV320AIC3107 further includes programmability to 3-state the DOUT line during all bit clocks when valid data is not being sent. By combining this capability with the ability to program at what bit clock in a frame the audio data will begin, time-division multiplexing (TDM) can be accomplished, resulting in multiple codecs able to use a single audio serial data bus.

Copyright © 2008–2009, Texas Instruments Incorporated

查询"TLV320AIC3107"供应商

When the audio serial data bus is powered down while configured in master mode, the pins associated with the interface will be put into a 3-state output condition.

RIGHT JUSTIFIED MODE

In right-justified mode, the LSB of the left channel is valid on the rising edge of the bit clock preceding the falling edge of word clock. Similarly, the LSB of the right channel is valid on the rising edge of the bit clock preceding the rising edge of the word clock.

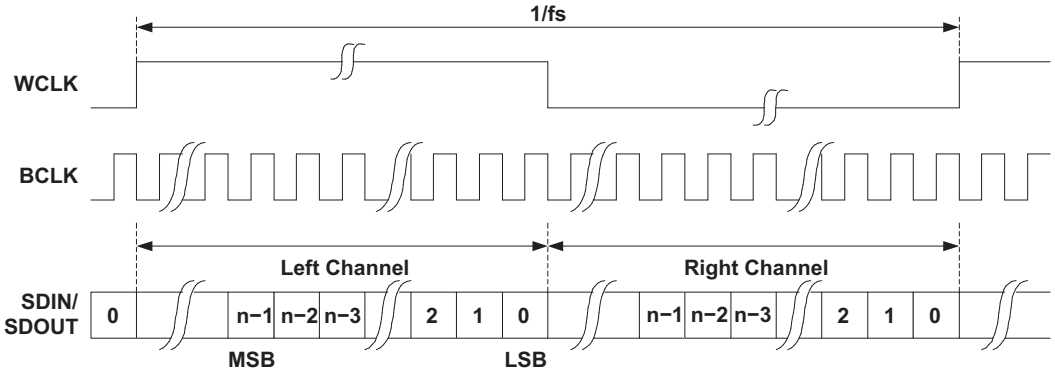

Figure 18. Right Justified Serial Bus Mode Operation

LEFT JUSTIFIED MODE

In left-justified mode, the MSB of the right channel is valid on the rising edge of the bit clock following the falling edge of the word clock. Similarly the MSB of the left channel is valid on the rising edge of the bit clock following the rising edge of the word clock.

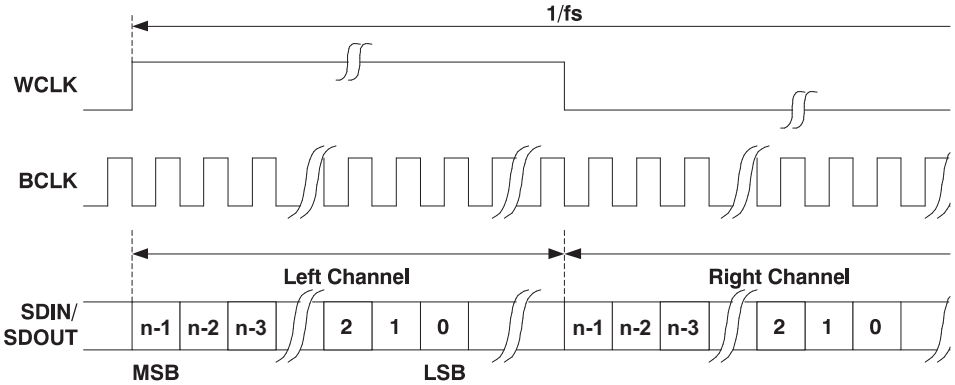

Figure 19. Left Justified Serial Data Bus Mode Operation

I^{2}S MODE

In I^{2}S mode, the MSB of the left channel is valid on the second rising edge of the bit clock after the falling edge of the word clock. Similarly the MSB of the right channel is valid on the second rising edge of the bit clock after the rising edge of the word clock.

Copyright © 2008–2009, Texas Instruments Incorporated

查询"TLV320AIC3107"供应商

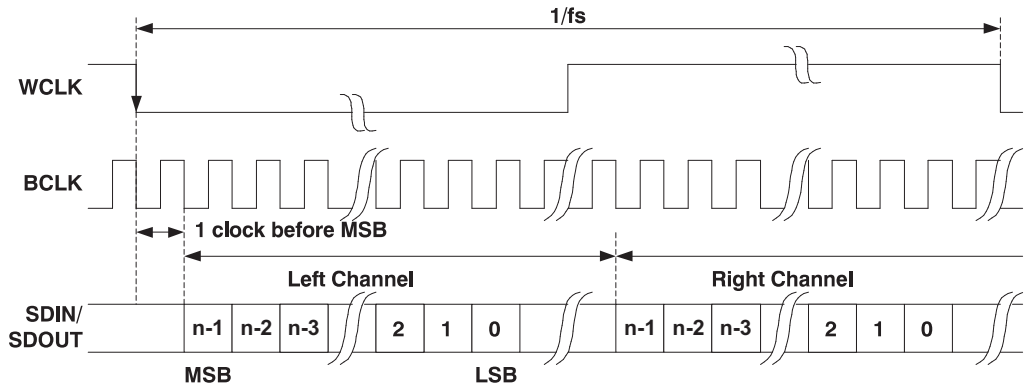

Figure 20. I²S Serial Data Bus Mode Operation

DSP MODE

In DSP mode, the rising edge of the word clock starts the data transfer with the left channel data first and immediately followed by the right channel data. Each data bit is valid on the falling edge of the bit clock.

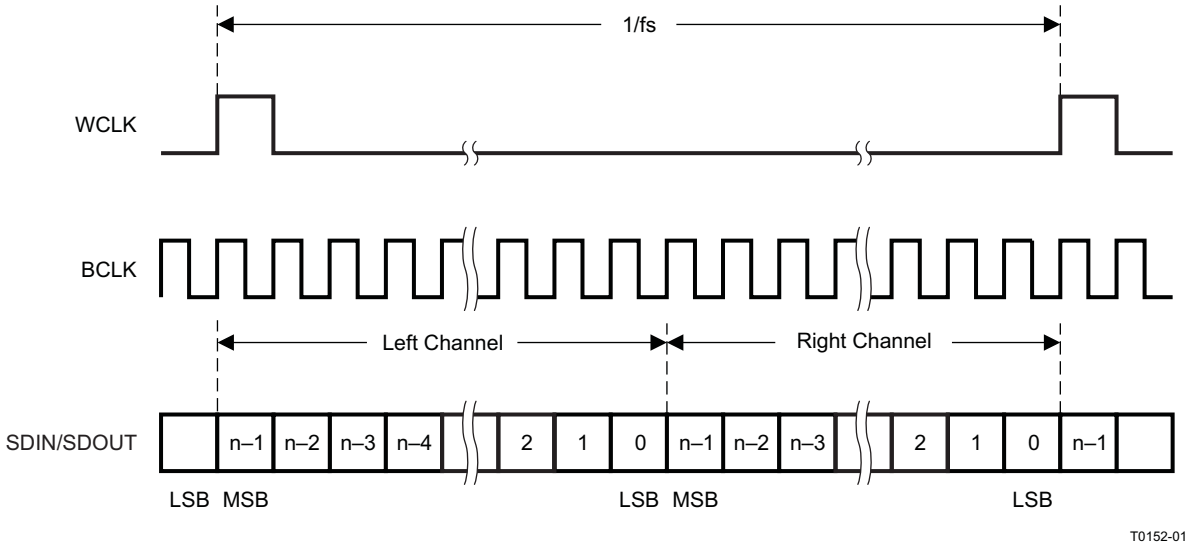

Figure 21. DSP Serial Bus Mode Operation

TDM DATA TRANSFER

Time-division multiplexed data transfer can be realized in any of the above transfer modes if the 256-clock bit clock mode is selected, although it is recommended to be used in either left-justified mode or DSP mode. By changing the programmable offset, the bit clock in each frame where the data begins can be changed, and the serial data output driver (DOUT) can also be programmed to 3-state during all bit clocks except when valid data is being put onto the bus. This allows other codecs to be programmed with different offsets and to drive their data onto the same DOUT line, just in a different slot. For incoming data, the codec simply ignores data on the bus except where it is expected based on the programmed offset.

Note that the location of the data when an offset is programmed is different, depending on what transfer mode is selected. In DSP mode, both left and right channels of data are transferred immediately adjacent to each other in the frame. This differs from left-justified mode, where the left and right channel data will always be a half-frame apart in each frame. In this case, as the offset is programmed from zero to some higher value, both the left and right channel data move across the frame, but still stay a full half-frame apart from each other. This is depicted in Figure 22 for the two cases.

Copyright © 2008–2009, Texas Instruments Incorporated

查询"TLV320AIC3107"供应商

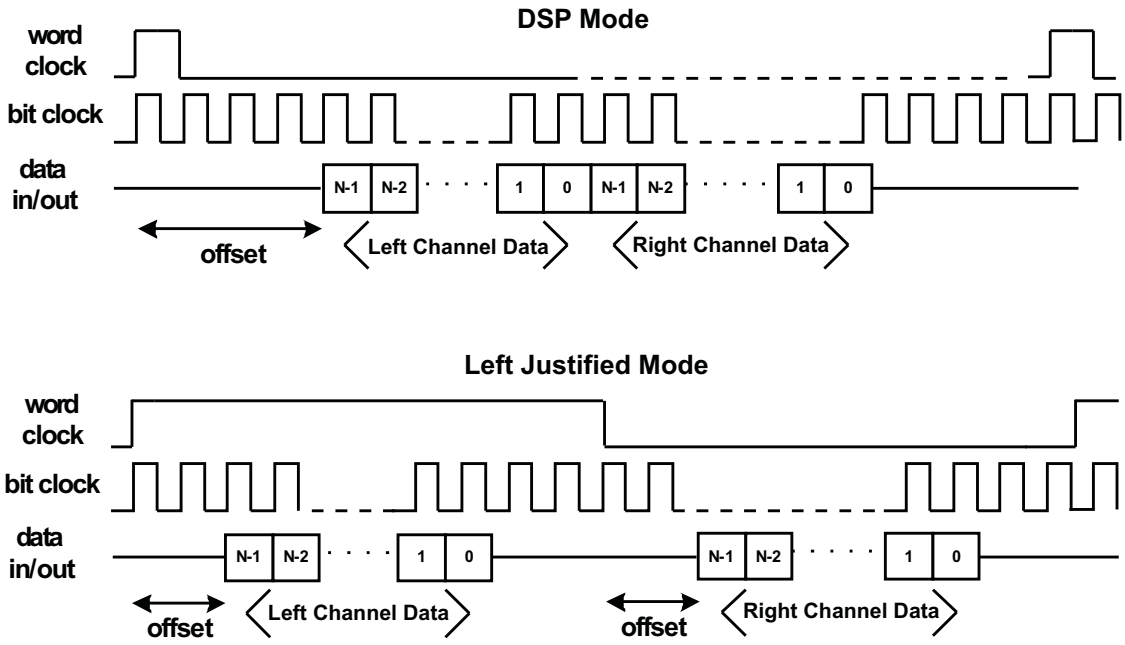

Figure 22. DSP Mode and Left Justified Modes, Showing the Effect of a Programmed Data Word Offset

AUDIO DATA CONVERTERS

The TLV320AIC3107 supports the following standard audio sampling rates: 8 kHz, 11.025 kHz, 12 kHz, 16 kHz, 22.05 kHz, 24 kHz, 32 kHz, 44.1 kHz, 48 kHz, 88.2 kHz, and 96 kHz. The converters can also operate at different sampling rates in various combinations, which are described further below.

The data converters are based on the concept of an Fsref rate that is used internal to the part, and it is related to the actual sampling rates of the converters through a series of ratios. For typical sampling rates, Fsref will be either 44.1 kHz or 48 kHz, although it can realistically be set over a wider range of rates up to 53 kHz, with additional restrictions applying if the PLL is used. This concept is used to set the sampling rates of the ADC and DAC, and also to enable high quality playback of low sampling rate data, without high frequency audible noise being generated.

The sampling rate of the ADC and DAC can be set to Fsref/NDAC or 2×Fsref/NDAC, with NDAC being 1, 1.5, 2, 2.5, 3, 3.5, 4, 4.5, 5, 5.5, or 6.

While only one Fsref can be used at a time in the part, the ADC and DAC sampling rates can differ from each other by using different NADC and NDAC divider ratios for each. For example, with Fsref=44.1-kHz, the DAC sampling rate can be set to 44.1-kHz by using NDAC=1, while the ADC sampling rate can be set to 8.018-kHz by using NADC=5.5.

When the ADCs and DACs are operating at different sampling rates, an additional word clock is required, to provide information regarding where data begins for the ADC versus the DAC. In this case, the standard bit clock signal is used to transfer both ADC and DAC data, the standard word clock signal is used to identify the start of the DAC data, and a separate ADC word clock signal (denoted ADWK) is used. This clock can be supplied or generated from GPIO1 at the same time the DAC word clock is supplied or generated from WCLK.

AUDIO CLOCK GENERATION

The audio converters in the TLV320AIC3107 need an internal audio master clock at a frequency of 256×Fsref, which can be obtained in a variety of manners from an external clock signal applied to the device.

A more detailed diagram of the audio clock section of the TLV320AIC3107 is shown in Figure 23.

 Copyright © 2008–2009, Texas Instruments Incorporated

查询"TLV320AIC3107"供应商

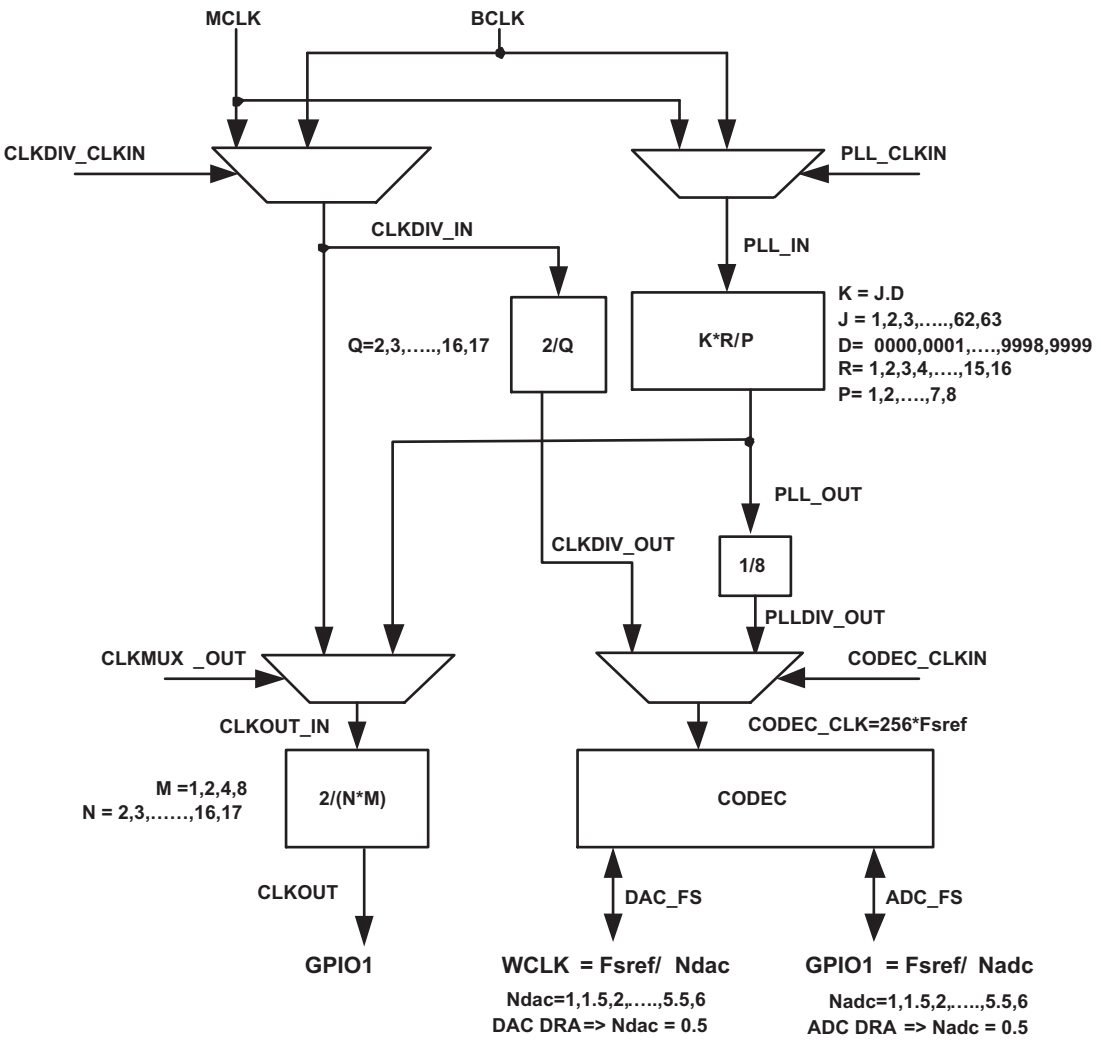

Figure 23. Audio Clock Generation Processing

The part can accept an MCLK input from 512 kHz to 50 MHz, which can then be passed through either a programmable divider or a PLL, to get the proper internal audio master clock needed by the part. The BCLK input can also be used to generate the internal audio master clock.

A primary concern is proper operation of the codec at various sample rates with the limited MCLK frequencies available in the system. This device includes a highly programmable PLL to accommodate such situations easily. The integrated PLL can generate audio clocks from a wide variety of possible MCLK inputs, with particular focus paid to the standard MCLK rates already widely used.

When the PLL is disabled,

Fsref = CLKDIV_IN / (128 × Q)

Where Q = 2, 3, …, 17

CLKDIV_IN can be MCLK or BCLK, selected by register 102, bits D7-D6.

NOTE – when NDAC = 1.5, 2.5, 3.5, 4.5, or 5.5, odd values of Q are not allowed. In this mode, MCLK can be as high as 50 MHz, and Fsref should fall within 39 kHz to 53 kHz.

When the PLL is enabled,

Fsref = (PLLCLK_IN × K × R) / (2048 × P), where

P = 1, 2, 3,…, 8

R = 1, 2, …, 16

查询"TLV320AIC3107"供应商

K = J.D
J = 1, 2, 3, …, 63
D = 0000, 0001, 0002, 0003, …, 9998, 9999
PLLCLK_IN can be MCLK or BCLK, selected by Page 0, register 102, bits D5-D4

P, R, J, and D are register programmable. J is the integer portion of K (the numbers to the left of the decimal point), while D is the fractional portion of K (the numbers to the right of the decimal point, assuming four digits of precision).

Examples:

If K = 8.5, then J = 8, D = 5000
If K = 7.12, then J = 7, D = 1200
If K = 14.03, then J = 14, D = 0300
If K = 6.0004, then J = 6, D = 0004

When the PLL is enabled and D = 0000, the following conditions must be satisfied to meet specified performance:

512 kHz ≤ (PLLCLK_IN / P) ≤ 20 MHz
80 MHz ≤ (PLLCLK _IN × K × R / P) ≤ 110 MHz
4 ≤ J ≤ 55

When the PLL is enabled and D≠0000, the following conditions must be satisfied to meet specified performance:

10 MHz ≤ PLLCLK _IN / P ≤ 20 MHz
80 MHz ≤ PLLCLK _IN × K × R / P ≤ 110 MHz
4 ≤ J ≤ 11
R = 1

Example:

MCLK = 12 MHz and Fsref = 44.1 kHz
Select P = 1, R = 1, K = 7.5264, which results in J = 7, D = 5264

Example:

MCLK = 12 MHz and Fsref = 48.0 kHz
Select P = 1, R = 1, K = 8.192, which results in J = 8, D = 1920

The table below lists several example cases of typical MCLK rates and how to program the PLL to achieve Fsref = 44.1 kHz or 48 kHz.

Fsref = 44.1 kHz						
MCLK (MHz)	**P**	**R**	**J**	**D**	**ACHIEVED FSREF**	**% ERROR**
2.8224	1	1	32	0	44100.00	0.0000
5.6448	1	1	16	0	44100.00	0.0000
12.0	1	1	7	5264	44100.00	0.0000
13.0	1	1	6	9474	44099.71	–0.0007
16.0	1	1	5	6448	44100.00	0.0000
19.2	1	1	4	7040	44100.00	0.0000
19.68	1	1	4	5893	44100.30	0.0007
48.0	4	1	7	5264	44100.00	0.0000
Fsref = 48 kHz						
MCLK (MHz)	**P**	**R**	**J**	**D**	**ACHIEVED FSREF**	**% ERROR**
2.048	1	1	48	0	48000.00	0.0000
3.072	1	1	32	0	48000.00	0.0000
4.096	1	1	24	0	48000.00	0.0000
6.144	1	1	16	0	48000.00	0.0000
8.192	1	1	12	0	48000.00	0.0000
12.0	1	1	8	1920	48000.00	0.0000
13.0	1	1	7	5618	47999.71	–0.0006

Copyright © 2008–2009, Texas Instruments Incorporated

查询"TLV320AIC3107"供应商

16.0	1	1	6	1440	48000.00	0.0000
19.2	1	1	5	1200	48000.00	0.0000
19.68	1	1	4	9951	47999.79	–0.0004
48.0	4	1	8	1920	48000.00	0.0000

The 'AIC3107 can also output a separate clock on the GPIO1 pin. If the PLL is being used for the audio data converter clock, the M and N settings can be used to provide a divided version of the PLL output. If the PLL is not being used for the audio data converter clock, the PLL can still be enabled to provide a completely independent clock output on GPIO1. The formula for the GPIO1 clock output when PLL is enabled and CLKMUX_OUT is 0 is:

GPIO1 = (PLLCLK_IN× 2 × K × R) / (M × N × P)

When CLKMUX_OUT is 1, regardless of whether PLL is enabled or disabled, the input to the clock output divider can be selected as MCLK or BCLK. Is this case, the formula for the GPIO1 clock is:

GPIO1 = (CLKDIV_IN × 2) / (M × N), where

M = 1, 2, 4, 8

N = 2, 3, …, 17

CLKDIV_IN can be BCLK or MCLK, selected by page 0, register 102, bits D7-D6

STEREO AUDIO ADC

The TLV320AIC3107 includes a stereo audio ADC, which uses a delta-sigma modulator with 128-times oversampling in single-rate mode, followed by a digital decimation filter. The ADC supports sampling rates from 8 kHz to 48 kHz in single-rate mode, and up to 96 kHz in dual-rate mode. Whenever the ADC or DAC is in operation, the device requires an audio master clock be provided and appropriate audio clock generation be setup within the part.

In order to provide optimal system power dissipation, the stereo ADC can be powered one channel at a time, to support the case where only mono record capability is required. In addition, both channels can be fully powered or entirely powered down.

The integrated digital decimation filter removes high-frequency content and downsamples the audio data from an initial sampling rate of 128 Fs to the final output sampling rate of Fs. The decimation filter provides a linear phase output response with a group delay of 17/Fs. The –3 dB bandwidth of the decimation filter extends to 0.45 Fs and scales with the sample rate (Fs). The filter has minimum 75dB attenuation over the stopband from 0.55 Fs to 64 Fs. Independent digital highpass filters are also included with each ADC channel, with a corner frequency that can be independently set to three different settings or can be disabled entirely.

Because of the oversampling nature of the audio ADC and the integrated digital decimation filtering, requirements for analog anti-aliasing filtering are relaxed. The TLV320AIC3107 integrates a second order analog anti-aliasing filter with 20 dB attenuation at 1 MHz. This filter, combined with the digital decimation filter, provides sufficient anti-aliasing filtering without requiring additional external components.

The ADC is preceded by a programmable gain amplifier (PGA), which allows analog gain control from 0 dB to 59.5 dB in steps of 0.5 dB. The PGA gain changes are implemented with an internal soft-stepping algorithm that only changes the actual volume level by one 0.5 dB step every one or two ADC output samples, depending on the register programming (see registers Page-0/Reg-19 and 22). This soft-stepping ensures that volume control changes occur smoothly with no audible artifacts. On reset, the PGA gain defaults to a mute condition, and upon power down, the PGA soft-steps the volume to mute before shutting down. A read-only flag is set whenever the gain applied by PGA equals the desired value set by the register. The soft-stepping control can also be disabled by programming a register bit. When soft stepping is enabled, the audio master clock must be applied to the part after the ADC power down register is written to ensure the soft-stepping to mute has completed. When the ADC powerdown flag is no longer set, the audio master clock can be shut down.

STEREO AUDIO ADC HIGH PASS FILTER

Often in audio applications it is desirable to remove the DC offset from the converted audio data stream. The TLV320AIC3107 has a programmable first order high pass filter which can be used for this purpose. The Digital filter coefficients are in 16-bit format and therefore use two 8-bit registers for each of the three coefficients of N0, N1, and D1. The transfer function of the digital high pass filter is of the form:

查询"TLV320AIC3107"供应商

$$H(z) = \frac{N0 + N1 \times z^{-1}}{32768 - D1 \times z^{-1}} \quad (1)$$

Programming the Left channel is done by writing to Page 1, Registers 65-70, and the right channel is programmed by writing to Page 1, Registers 71-76. After the coefficients have been loaded, these ADC high pass filter coefficients can be selected by writing to Page 0, Register 107, D7-D6, and the high pass filter can be enabled by writing to Page 0, Register 12, bits D7-D4.

DIGITAL AUDIO PROCESSING FOR RECORD PATH

In applications where record *only* is selected, and DAC is powered down, the playback path signal processing blocks can be used in the ADC record path. These filtering blocks can support high pass, low pass, band pass or notch filtering. In this mode, the record only path has switches SW-D1 through SW-D4 closed, and reroutes the ADC output data through the digital signal processing blocks. Since the DAC's Digital Signal Processing blocks are being re-used, naturally the addresses of these digital filter coefficients are the same as for the DAC digital processing and are located on Page 1, Registers 1-52. This record only mode is enabled by powering down both DACs by writing to Page 0, Register 37, bits D7-D6 (D7=D6="0"). Next, enable the digital filter pathway for the ADC by writing a "1" to Page 0, Register 107, bit D3. (Note, this pathway is only enabled if *both* DACs are powered down.) This record only path can be seen in Figure 24.

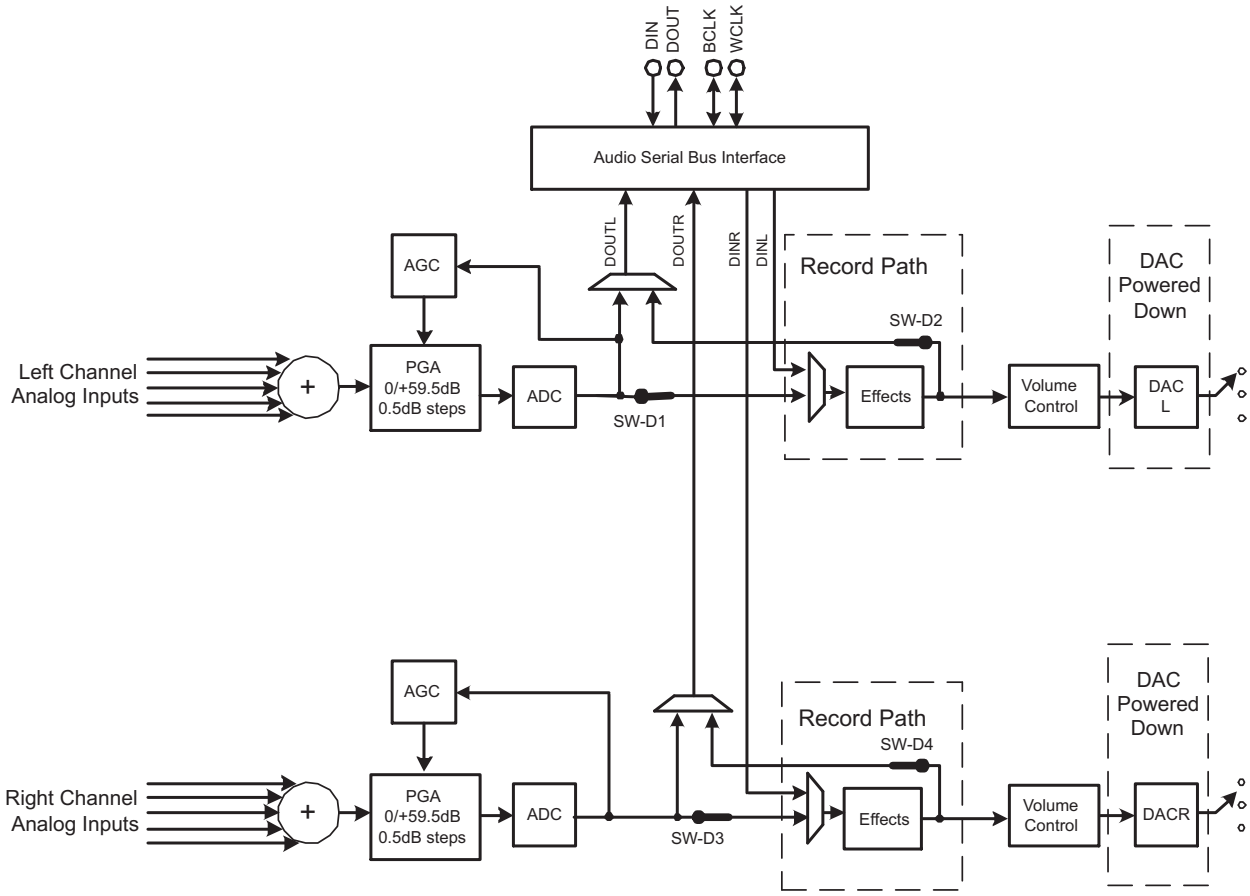

Figure 24. Record *Only* Mode With Digital Processing Path Enabled

AUTOMATIC GAIN CONTROL (AGC)

An automatic gain control (AGC) circuit is included with the ADC and can be used to maintain nominally constant output signal amplitude when recording speech signals (it can be fully disabled if not desired). This circuitry automatically adjusts the PGA gain as the input signal becomes loud or weak, such as when a person speaking

Copyright © 2008–2009, Texas Instruments Incorporated

查询"TLV320AIC3107"供应商

into a microphone moves closer or farther from the microphone. The AGC algorithm has several programmable settings, including target gain, attack and decay time constants, noise threshold, and maximum PGA gain applicable that allow the algorithm to be fine tuned for any particular application. The algorithm uses the absolute average of the signal (which is the average of the absolute value of the signal) as a measure of the nominal amplitude of the output signal.

Note that completely independent AGC circuitry is included with each ADC channel with entirely independent control over the algorithm from one channel to the next. This is attractive in cases where two microphones are used in a system, but may have different placement in the end equipment and require different dynamic performance for optimal system operation.

Target level represents the nominal output level at which the AGC attempts to hold the ADC output signal level. The TLV320AIC3107 allows programming of eight different target levels, which can be programmed from –5.5 dB to –24 dB relative to a full-scale signal. Since the device reacts to the signal absolute average and not to peak levels, it is recommended that the target level be set with enough margin to avoid clipping at the occurrence of loud sounds.

Attack time determines how quickly the AGC circuitry reduces the PGA gain when the input signal is too loud. It can be varied from 7 ms to 1,408 ms. The extended Right Channel Attack time can be programmed by writing to Page 0, Registers 103, and Left Channel is programmed by writing to Page 0, Register 105.

Decay time determines how quickly the PGA gain is increased when the input signal is too low. It can be varied in the range from 0.05 s to 22.4 s. The extended Right Channel Decay time can be programmed by writing to Page 0, Registers 104, and Left Channel is programmed by writing to Page 0, Register 106.

The actual AGC decay time maximum is based on a counter length, so the maximum decay time will scale with the clock set up that is used. The table below shows the relationship of the NADC ratio to the maximum time available for the AGC decay. In practice, these maximum times are extremely long for audio applications and should not limit any practical AGC decay time that is needed by the system.

Table 1. AGC Decay Time Restriction

NADC RATIO	MAXIMUM DECAY TIME (seconds)
1.0	4.0
1.5	5.6
2.0	8.0
2.5	9.6
3.0	11.2
3.5	11.2
4.0	16.0
4.5	16.0
5.0	19.2
5.5	22.4
6.0	22.4

Noise gate threshold determines the level below which if the input speech average value falls, AGC considers it as a silence and hence brings down the gain to 0 dB in steps of 0.5 dB every FS and sets the noise threshold flag. The gain stays at 0 dB unless the input speech signal average rises above the noise threshold setting. This ensures that noise does not get gained up in the absence of speech. Noise threshold level in the AGC algorithm is programmable from –30 dB to –90 dB relative to full scale. A disable noise gate feature is also available. This operation includes programmable debounce and hysteresis functionality to avoid the AGC gain from cycling between high gain and 0 dB when signals are near the noise threshold level. When the noise threshold flag is set, the status of gain applied by the AGC and the saturation flag should be ignored.

Maximum PGA gain applicable allows the user to restrict the maximum PGA gain that can be applied by the AGC algorithm. This can be used for limiting PGA gain in situations where environmental noise is greater than programmed noise threshold. It can be programmed from 0 dB to +59.5 dB in steps of 0.5 dB.

Copyright © 2008–2009, Texas Instruments Incorporated

查询"TLV320AIC3107"供应商

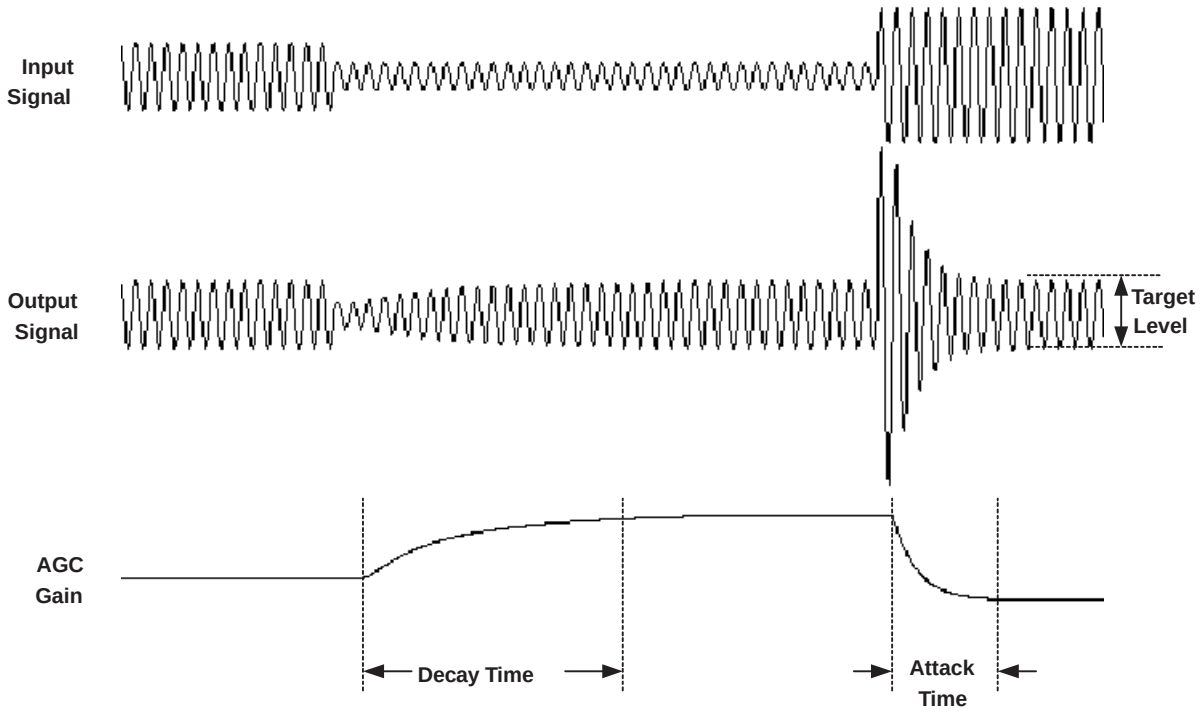

Figure 25. Typical Operation of the AGC Algorithm During Speech Recording

Note that the time constants here are correct when the ADC is not in double-rate audio mode. The time constants are achieved using the Fsref value programmed in the control registers. However, if the Fsref is set in the registers to, for example, 48 kHz, but the actual audio clock or PLL programming actually results in a different Fsref in practice, then the time constants would not be correct.

The actual AGC decay time maximum is based on a counter length, so the maximum decay time scales with the clock set up that is used. Table 1 shows the relationship of the NADC ratio to the maximum time available for the AGC decay. In practice, these maximum times are extremely long for audio applications and should not limit any practical AGC decay time that is needed by the system.

STEREO AUDIO DAC

The TLV320AIC3107 includes a stereo audio DAC supporting sampling rates from 8 kHz to 96 kHz. Each channel of the stereo audio DAC consists of a digital audio processing block, a digital interpolation filter, multi-bit digital delta-sigma modulator, and an analog reconstruction filter. The DAC is designed to provide enhanced performance at low sampling rates through increased oversampling and image filtering, thereby keeping quantization noise generated within the delta-sigma modulator and signal images strongly suppressed within the audio band to beyond 20 kHz. This is realized by keeping the upsampled rate constant at 128 × Fsref and changing the oversampling ratio as the input sample rate is changed. For an Fsref of 48 kHz, the digital delta-sigma modulator always operates at a rate of 6.144 MHz. This ensures that quantization noise generated within the delta-sigma modulator stays low within the frequency band below 20 kHz at all sample rates. Similarly, for an Fsref rate of 44.1 kHz, the digital delta-sigma modulator always operates at a rate of 5.6448 MHz.

The following restrictions apply in the case when the PLL is powered down and double-rate audio mode is enabled in the DAC.

Allowed Q values = 4, 8, 9, 12, 16

Q values where equivalent Fsref can be achieved by turning on PLL

Q = 5, 6, 7 (set P = 5 / 6 / 7 and K = 16 and PLL enabled)

Q = 10, 14 (set P = 5, 7 and K = 8 and PLL enabled)

Copyright © 2008–2009, Texas Instruments Incorporated

查询"TLV320AIC3107"供应商

DIGITAL AUDIO PROCESSING FOR PLAYBACK

The DAC channel consists of optional filters for de-emphasis and bass, treble, midrange level adjustment, speaker equalization, and 3-D effects processing. The de-emphasis function is implemented by a programmable digital filter block with fully programmable coefficients (see Page-1/Reg-21-26 for left channel, Page-1/Reg-47-52 for right channel). If de-emphasis is not required in a particular application, this programmable filter block can be used for some other purpose. The de-emphasis filter transfer function is given by:

$$H(z) = \frac{N0 + N1 \times z^{-1}}{32768 - D1 \times z^{-1}} \tag{2}$$

where the N0, N1, and D1 coefficients are fully programmable individually for each channel. The coefficients that should be loaded to implement standard de-emphasis filters are given in Table 2.

Table 2. De-Emphasis Coefficients for Common Audio Sampling Rates

SAMPLING FREQUENCY	N0	N1	D1
32-kHz	16950	–1220	17037
44.1-kHz	15091	–2877	20555
48-kHz(1)	14677	–3283	21374

(1) The 48-kHz coefficients listed in Table 2 are used as defaults.

In addition to the de-emphasis filter block, the DAC digital effects processing includes a fourth order digital IIR filter with programmable coefficients (one set per channel). This filter is implemented as cascade of two biquad sections with frequency response given by:

$$\left(\frac{N0 + 2 \times N1 \times z^{-1} + N2 \times z^{-2}}{32768 - 2 \times D1 \times z^{-1} - D2 \times z^{-2}}\right)\left(\frac{N3 + 2 \times N4 \times z^{-1} + N5 \times z^{-2}}{32768 - 2 \times D4 \times z^{-1} - D5 \times z^{-2}}\right) \tag{3}$$

The N and D coefficients are fully programmable, and the entire filter can be enabled or bypassed. The structure of the filtering when configured for independent channel processing is shown below in Figure 26, with LB1 corresponding to the first left-channel biquad filter using coefficients N0, N1, N2, D1, and D2. LB2 similarly corresponds to the second left-channel biquad filter using coefficients N3, N4, N5, D4, and D5. The RB1 and RB2 filters refer to the first and second right-channel biquad filters, respectively.

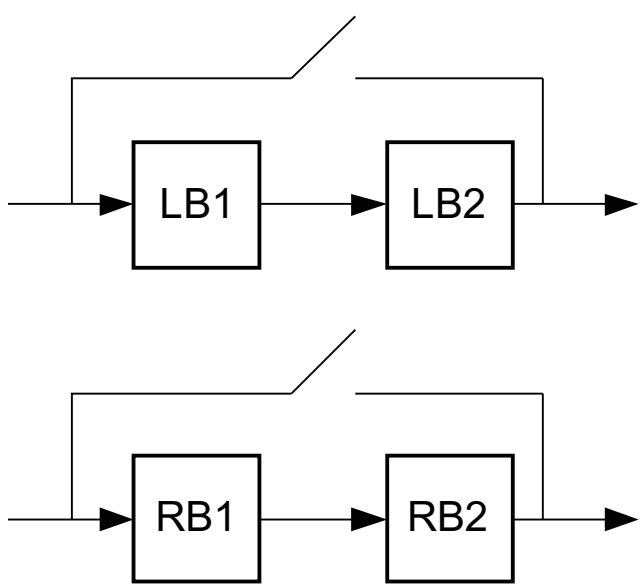

Figure 26. Structure of the Digital Effects Processing for Independent Channel Processing

查询"TLV320AIC3107"供应商

The coefficients for this filter implement a variety of sound effects, with bass-boost or treble boost being the most commonly used in portable audio applications. The default N and D coefficients in the part are given in Table 3 and implement a shelving filter with 0 dB gain from DC to approximately 150 Hz, at which point it rolls off to a 3 dB attenuation for higher frequency signals, thus giving a 3 dB boost to signals below 150 Hz. The N and D coefficients are represented by 16-bit two's complement numbers with values ranging from –32768 to 32767.

Table 3. Default Digital Effects Processing Filter Coefficients, When in Independent Channel Processing Configuration

Coefficients				
N0 = N3	**D1 = D4**	**N1 = N4**	**D2 = D5**	**N2 = N5**
27619	32131	–27034	–31506	26461

The digital processing also includes capability to implement 3-D processing algorithms by providing means to process the mono mix of the stereo input, and then combine this with the individual channel signals for stereo output playback. The architecture of this processing mode, and the programmable filters available for use in the system, is shown in Figure 27. Note that the programmable attenuation block provides a method of adjusting the level of 3-D effect introduced into the final stereo output. This combined with the fully programmable biquad filters in the system enables the user to fully optimize the audio effects for a particular system and provide extensive differentiation from other systems using the same device.

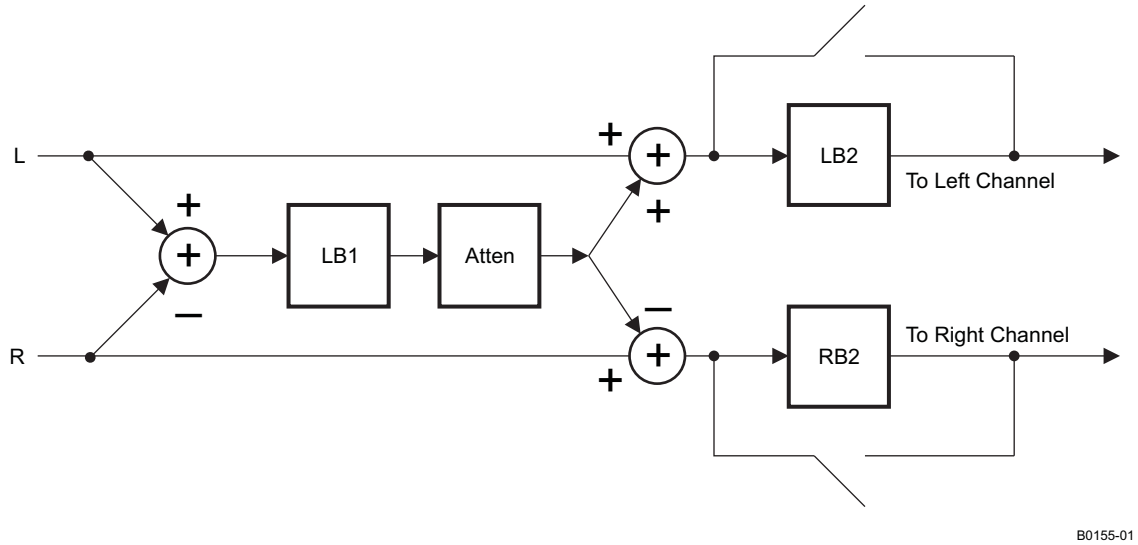

Figure 27. Architecture of the Digital Audio Processing When 3-D Effects are Enabled

It is recommended that the digital effects filters should be disabled while the filter coefficients are being modified. While new coefficients are being written to the device over the control port, it is possible that a filter using partially updated coefficients may actually implement an unstable system and lead to oscillation or objectionable audio output. By disabling the filters, changing the coefficients, and then re-enabling the filters, these types of effects can be entirely avoided.

Copyright © 2008–2009, Texas Instruments Incorporated

查询"TLV320AIC3107"供应商

DIGITAL INTERPOLATION FILTER

The digital interpolation filter upsamples the output of the digital audio processing block by the required oversampling ratio before data is provided to the digital delta-sigma modulator and analog reconstruction filter stages. The filter provides a linear phase output with a group delay of 21/Fs. In addition, programmable digital interpolation filtering is included to provide enhanced image filtering and reduce signal images caused by the upsampling process that are below 20 kHz. For example, upsampling an 8-kHz signal produces signal images at multiples of 8-kHz (i.e., 8 kHz, 16 kHz, 24 kHz, etc.). The images at 8 kHz and 16 kHz are below 20 kHz and still audible to the listener; therefore, they must be filtered heavily to maintain a good quality output. The interpolation filter is designed to maintain at least 65 dB rejection of images that land below 7.455 Fs. In order to utilize the programmable interpolation capability, the Fsref should be programmed to a higher rate (restricted to be in the range of 39 kHz to 53 kHz when the PLL is in use), and the actual Fs is set using the NDAC divider. For example, if Fs = 8 kHz is required, then Fsref can be set to 48 kHz, and the DAC Fs set to Fsref/6. This ensures that all images of the 8-kHz data are sufficiently attenuated well beyond a 20-kHz audible frequency range.

DELTA-SIGMA AUDIO DAC

The stereo audio DAC incorporates a third order multi-bit delta-sigma modulator followed by an analog reconstruction filter. The DAC provides high-resolution, low-noise performance, using oversampling and noise shaping techniques. The analog reconstruction filter design consists of a 6-tap analog FIR filter followed by a continuous time RC filter. The analog FIR operates at a rate of 128 × Fsref (6.144 MHz when Fsref = 48 kHz, 5.6448 MHz when Fsref = 44.1 kHz). Note that the DAC analog performance may be degraded by excessive clock jitter on the MCLK input. Therefore, care must be taken to keep jitter on this clock to a minimum.

AUDIO DAC DIGITAL VOLUME CONTROL

The audio DAC includes a digital volume control block which implements a programmable digital gain. The volume level can be varied from 0 dB to –63.5 dB in 0.5 dB steps, in addition to a mute bit, independently for each channel. The volume level of both channels can also be changed simultaneously by the master volume control. Gain changes are implemented with a soft-stepping algorithm, which only changes the actual volume by one step per input sample, either up or down, until the desired volume is reached. The rate of soft-stepping can be slowed to one step per two input samples through a register bit.

Because of soft-stepping, the host does not know when the DAC has been actually muted. This may be important if the host wishes to mute the DAC before making a significant change, such as changing sample rates. In order to help with this situation, the device provides a flag back to the host via a read-only register bit that alerts the host when the part has completed the soft-stepping and the actual volume has reached the desired volume level. The soft-stepping feature can be disabled through register programming. If soft-stepping is enabled, the MCLK signal should be kept applied to the device until the DAC power-down flag is set. When this flag is set, the internal soft-stepping process and power down sequence is complete, and the MCLK can then be stopped if desired.

The TLV320AIC3107 also includes functionality to detect when the user switches on or off the de-emphasis or digital audio processing functions, to first (1) soft-mute the DAC volume control, (2) change the operation of the digital effects processing, and (3) soft-unmute the part. This avoids any possible pop/clicks in the audio output due to instantaneous changes in the filtering. A similar algorithm is used when first powering up or down the DAC. The circuit begins operation at power up with the volume control muted, then soft-steps it up to the desired volume level. At power down, the logic first soft-steps the volume down to a mute level, then powers down the circuitry.

INCREASING DAC DYNAMIC RANGE

The TLV320AIC3107 allows trading off dynamic range with power consumption. The DAC dynamic range can be increased by writing to Page 0, Register 109 bits D7-D6. The lowest DAC current setting is the default, and the dynamic range is displayed in the datasheet table. Increasing the current can increase the DAC dynamic range by up to 1.5dB.

Copyright © 2008–2009, Texas Instruments Incorporated

查询"TLV320AIC3107"供应商

ANALOG OUTPUT COMMON-MODE ADJUSTMENT

The output common-mode voltage and output range of the analog output are determined by an internal bandgap reference, in contrast to other codecs that may use a divided version of the supply. This scheme is used to reduce the coupling of noise that may be on the supply (such as 217-Hz noise in a GSM cellphone) into the audio signal path.

However, due to the possible wide variation in analog supply range (2.7 V – 3.6 V), an output common-mode voltage setting of 1.35 V, which would be used for a 2.7 V supply case, will be overly conservative if the supply is actually much larger, such as 3.3 V or 3.6 V. In order to optimize device operation, the TLV320AIC3107 includes a programmable output common-mode level, which can be set by register programming to a level most appropriate to the actual supply range used by a particular customer. The output common-mode level can be varied among four different values, ranging from 1.35 V (most appropriate for low supply ranges, near 2.7 V) to 1.8 V (most appropriate for high supply ranges, near 3.6 V). Note that there is also some limitation on the range of DVDD voltage as well in determining which setting is most appropriate.

Table 4. Appropriate Settings

CM SETTING	RECOMMENDED AVDD_DAC, DRVDD	RECOMMENDED DVDD
1.35	2.7 V – 3.6 V	1.525 V – 1.95 V
1.50	3.0 V – 3.6 V	1.65 V – 1.95 V
1.65 V	3.3 V – 3.6 V	1.8 V – 1.95 V
1.8 V	3.6 V	1.95 V

AUDIO DAC POWER CONTROL

The stereo DAC can be fully powered up or down, and in addition, the analog circuitry in each DAC channel can be powered up or down independently. This provides power savings when only a mono playback stream is needed.

Copyright © 2008–2009, Texas Instruments Incorporated

查询"TLV320AIC3107"供应商

AUDIO ANALOG INPUTS

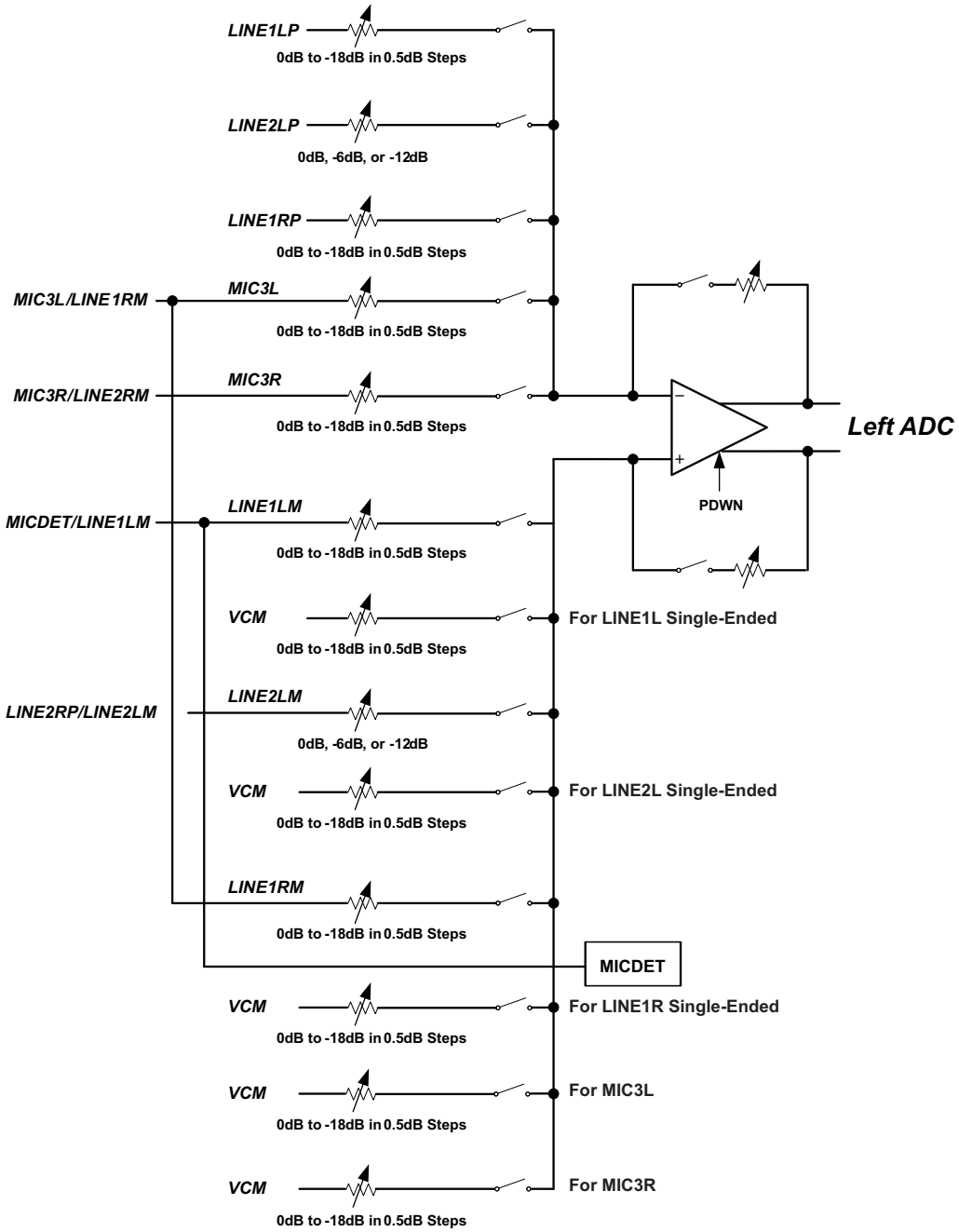

Figure 28. Left Signal Path

查询"TLV320AIC3107"供应商

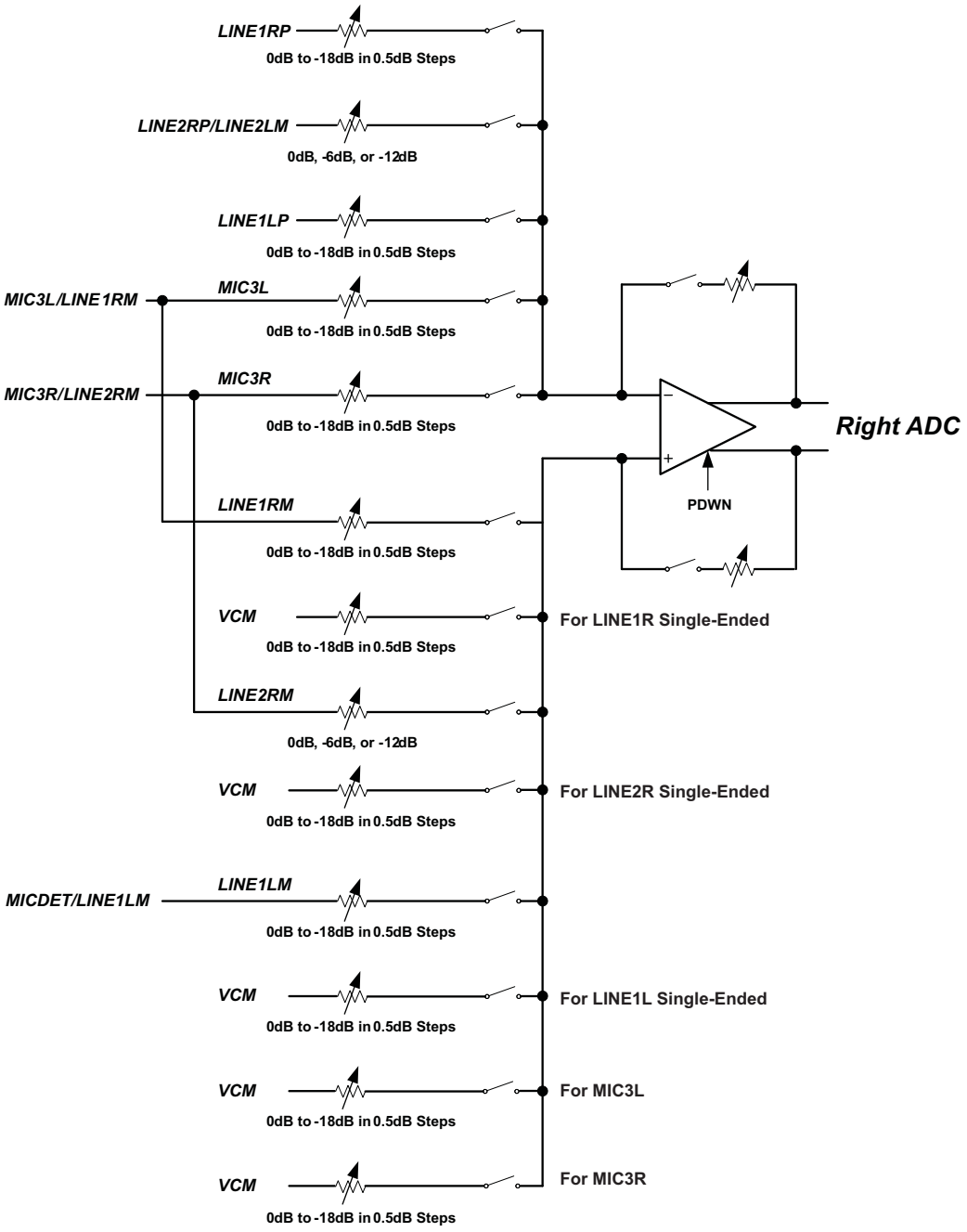

Figure 29. Right Signal Path

Copyright © 2008–2009, Texas Instruments Incorporated

查询"TLV320AIC3107"供应商

The TLV320AIC3107 includes seven analog audio input pins, which can be configured as up to three fully-differential pair plus one single-ended audio inputs, or up to six single-ended audio inputs. . These pins connect through series resistors and switches to the virtual ground terminals of two fully differential opamps (one per ADC/PGA channel). By selecting to turn on only one set of switches per opamp at a time, the inputs can be effectively muxed to each ADC PGA channel.

By selecting to turn on multiple sets of switches per opamp at a time, mixing can also be achieved. Mixing of multiple inputs can easily lead to PGA outputs that exceed the range of the internal opamps, resulting in saturation and clipping of the mixed output signal. Whenever mixing is being implemented, the user should take adequate precautions to avoid such a saturation case from occurring. In general, the mixed signal should not exceed 2 V_{pp} (single-ended) or 4 V_{pp} (differential).

In most mixing applications, there is also a general need to adjust the levels of the individual signals being mixed. For example, if a soft signal and a large signal are to be mixed and played together, the soft signal generally should be amplified to a level comparable to the large signal before mixing. In order to accommodate this need, the TLV320AIC3107 includes input level control on each of the individual inputs before they are mixed or muxed into the ADC PGAs, with gain programmable from 0 dB to –12 dB in 1.5 dB steps (except for LINE2 which has 6 dB steps). Note that this input level control is not intended to be a volume control, but instead used occasionally for level setting. Soft-stepping of the input level control settings is implemented in this device, with the speed and functionality following the settings used by the ADC PGA for soft-stepping.

The TLV320AIC3107 supports the ability to mix up to three fully-differential analog inputs into each ADC PGA channel. Figure 30 shows the mixing configuration for the left channel, which can mix the signals LINE1LP-LINE1LM, LINE2LP-LINE2LM, and LINE1RP-LINE1RM

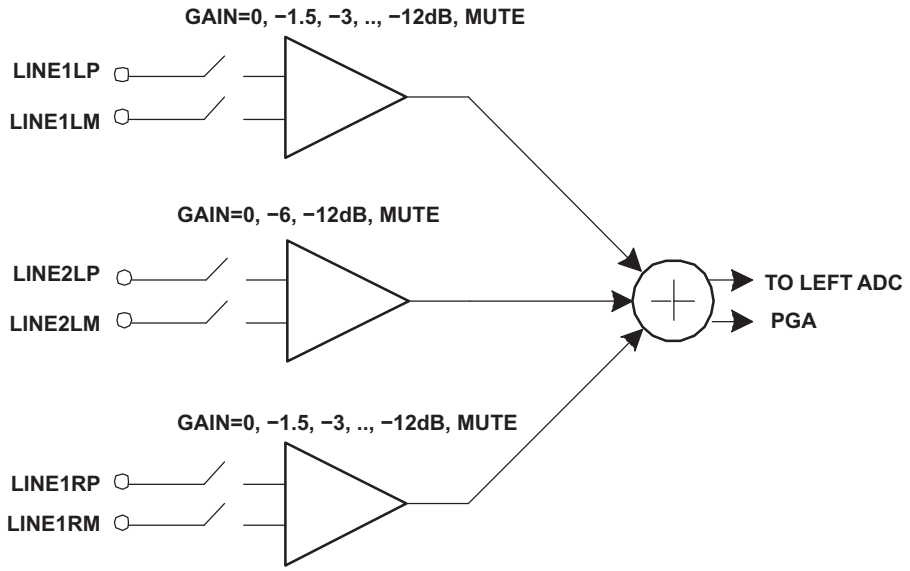

Figure 30. Left Channel Fully-Differential Analog Input Mixing Configuration

Three fully-differential analog inputs can similarly be mixed into the right ADC PGA as well, consisting of LINE1RP-LINE1RM, LINE2RP-LINE2RM, and LINE1LP-LINE1LM. Note that it is not necessary to mix all three fully-differential signals if this is not desired – unnecessary inputs can simply be muted using the input level control registers.

查询"TLV320AIC3107"供应商

Inputs can also be selected as single-ended instead of fully-differential, and mixing or muxing into the ADC PGAs is also possible in this mode. It is not possible, however, for an input pair to be selected as fully-differential for connection to one ADC PGA and simultaneously selected as single-ended for connection to the other ADC PGA channel. However, it is possible for an input to be selected or mixed into both left and right channel PGAs, as long as it has the same configuration for both channels (either both single-ended or both fully-differential).

Figure 31 shows the single-ended mixing configuration for the left channel ADC PGA, which enables mixing of the signals LINE1LP, LINE2LP, LINE1RP, MIC3L, and MIC3R. The right channel ADC PGA mix is similar, enabling mixing of the signals LINE1RP, LINE2RP, LINE1LP, MIC3L, and MIC3R.

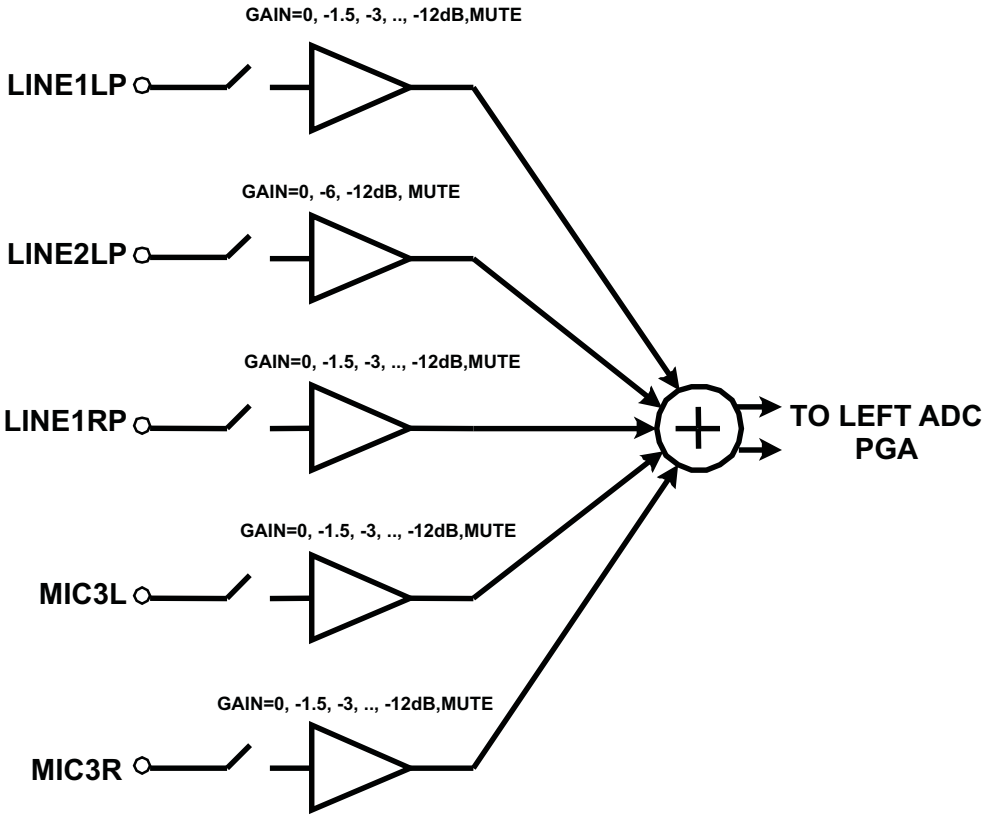

Figure 31. Left Channel Single-Ended Analog Input Mixing Configuration

ANALOG INPUT BYPASS PATH FUNCTIONALITY

The TLV320AIC3107 includes the additional ability to route some analog input signals past the integrated data converters, for mixing with other analog signals and then direct connection to the output drivers. This capability is useful in a cellphone, for example, when a separate FM radio device provides a stereo analog output signal that needs to be routed to headphones. The TLV320AIC3107 supports this in a low power mode by providing a direct analog path through the device to the output drivers, while all ADCs and DACs can be completely powered down to save power.

For fully-differential inputs, the TLV320AIC3107 provides the ability to pass the signals LINE2LP-LINE2LM and LINE2RP-LINE2RM to the output stage directly. If in single-ended configuration, the device can pass the signal LINE2LP and LINE2RP to the output stage directly.

Copyright © 2008–2009, Texas Instruments Incorporated

查询"TLV320AIC3107"供应商

ADC PGA SIGNAL BYPASS PATH FUNCTIONALITY

In addition to the input bypass path described above, the TLV320AIC3107 also includes the ability to route the ADC PGA output signals past the ADC, for mixing with other analog signals and then direct connection to the output drivers. These bypass functions are described in more detail in the sections on output mixing and output driver configurations.

INPUT IMPEDANCE AND VCM CONTROL

The TLV320AIC3107 includes several programmable settings to control analog input pins, particularly when they are not selected for connection to an ADC PGA. The default option allows unselected inputs to be put into a 3-state condition, such that the input impedance seen looking into the device is extremely high. Note, however, that the pins on the device do include protection diode circuits connected to AVDD and AVSS. Thus, if any voltage is driven onto a pin approximately one diode drop (~0.6 V) above AVDD or one diode drop below AVSS, these protection diodes will begin conducting current, resulting in an effective impedance that no longer appears as a 3-state condition.

Another programmable option for unselected analog inputs is to weakly hold them at the common-mode input voltage of the ADC PGA (which is determined by an internal bandgap voltage reference). This is useful to keep the ac-coupling capacitors connected to analog inputs biased up at a normal DC level, thus avoiding the need for them to charge up suddenly when the input is changed from being unselected to selected for connection to an ADC PGA. This option is controlled in Page-0/Reg-20 and 23. The user should ensure this option is disabled when an input is selected for connection to an ADC PGA or selected for the analog input bypass path, since it can corrupt the recorded input signal if left operational when an input is selected.

In most cases, the analog input pins on the TLV320AIC3107 should be ac-coupled to analog input sources, the only exception to this generally being if an ADC is being used for DC voltage measurement. The ac-coupling capacitor will cause a highpass filter pole to be inserted into the analog signal path, so the size of the capacitor must be chosen to move that filter pole sufficiently low in frequency to cause minimal effect on the processed analog signal. The input impedance of the analog inputs when selected for connection to an ADC PGA varies with the setting of the input level control, starting at approximately 20 kΩ with an input level control setting of 0 dB, and increasing to approximately 80-kΩ when the input level control is set at –12 dB. For example, using a 0.1 µF ac-coupling capacitor at an analog input will result in a highpass filter pole of 80 Hz when the 0 dB input level control setting is selected.

PASSIVE ANALOG BYPASS DURING POWERDOWN

Programming the TLV320AIC3107 to Passive Analog bypass occurs by configuring the output stage switches for pass through. This is done by opening switches SW-L0, SW-L3, SW-R0, and closing either SW-L1 or SW-L2 and SW-R1 or SW-R2. See Figure 32 Passive Analog Bypass Mode Configuration. Programming this mode is done by writing to Page 0, Register 108.

Connecting LINE1LP input signal to the LEFT_LOP pin is done by closing SW-L1 and opening SW-L0, this action is done by writing a “1” to Page 0, Register 108, Bit D0. Connecting LINE2LP input signal to the LEFT_LOP internal signal is done by closing SW-L2 and opening SW-L0, this action is done by writing a “1” to Page 0, Register 108, Bit D2. Connecting MICDET/LINE1LM input signal to the LEFT_LOM internal signal is done by closing SW-L4 and opening SW-L3, this action is done by writing a “1” to Page 0, Register 108, Bit D1. Connecting LINE2RP/LINE2LM input signal to the LEFT_LOM internal signal is done by closing SW-L5 and opening SW-L3, this action is done by writing a “1” to Page 0, Register 108, Bit D3.

Connecting MIC1RP/LINE1RP input signal to the RIGHT_LOP pin is done by closing SW-R1 and opening SW-R0, this action is done by writing a “1” to Page 0, Register 108, Bit D4. Connecting LINE2RP/LINE2LM input signal to the RIGHT_LOP pin is done by closing SW-R2 and opening SW-R0, this action is done by writing a “1” to Page 0, Register 108, Bit D6. A diagram of the passive analog bypass mode configuration can be seen in Figure 32.

In general, connecting two switches to the same output pin should be avoided, as this error will short two input signals together, and can cause distortion of the signal as the two signal are in contention, and poor frequency response can occur.

Copyright © 2008–2009, Texas Instruments Incorporated

查询"TLV320AIC3107"供应商

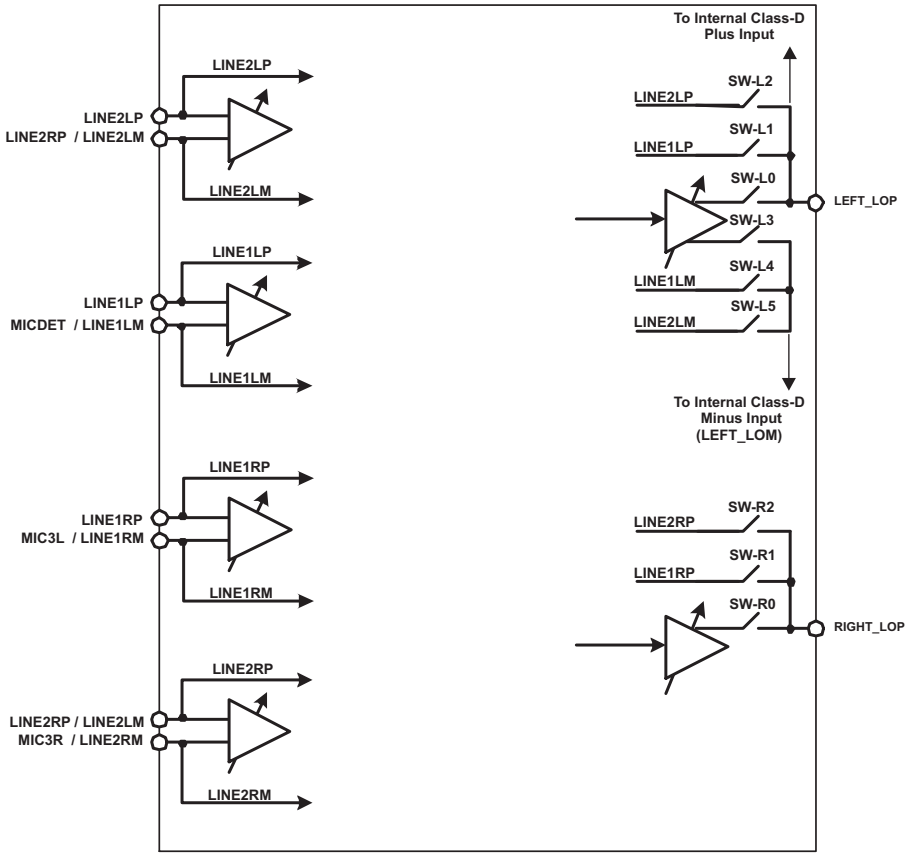

Figure 32. Passive Analog Bypass Mode Configuration

MICBIAS GENERATION

The TLV320AIC3107 includes a programmable microphone bias output voltage (MICBIAS), capable of providing output voltages of 2.0 V or 2.5 V (both derived from the on-chip bandgap voltage) with 4-mA output current drive. In addition, the MICBIAS may be programmed to be switched to AVDD directly through an on-chip switch, or it can be powered down completely when not needed, for power savings. This function is controlled by register programming in Page-0/Reg-25.

Copyright © 2008–2009, Texas Instruments Incorporated

查询"TLV320AIC3107"供应商

ANALOG LINE OUTPUT DRIVERS

The TLV320AIC3107 has two single-ended line output drivers, each capable of driving a 10-kΩ load. The output stage design leading to the fully differential line output drivers is shown in Figure 33 and Figure 34. This design includes extensive capability to adjust signal levels independently before any mixing occurs, beyond that already provided by the PGA gain and the DAC digital volume control.

The LINE2L/R signals refer to the signals that travel through the analog input bypass path to the output stage. The PGA_L/R signals refer to the outputs of the ADC PGA stages that are similarly passed around the ADC to the output stage. Note that since both left and right channel signals are routed to all output drivers, a mono mix of any of the stereo signals can easily be obtained by setting the volume controls of both left and right channel signals to –6 dB and mixing them. Undesired signals can also be disconnected from the mix as well through register control.

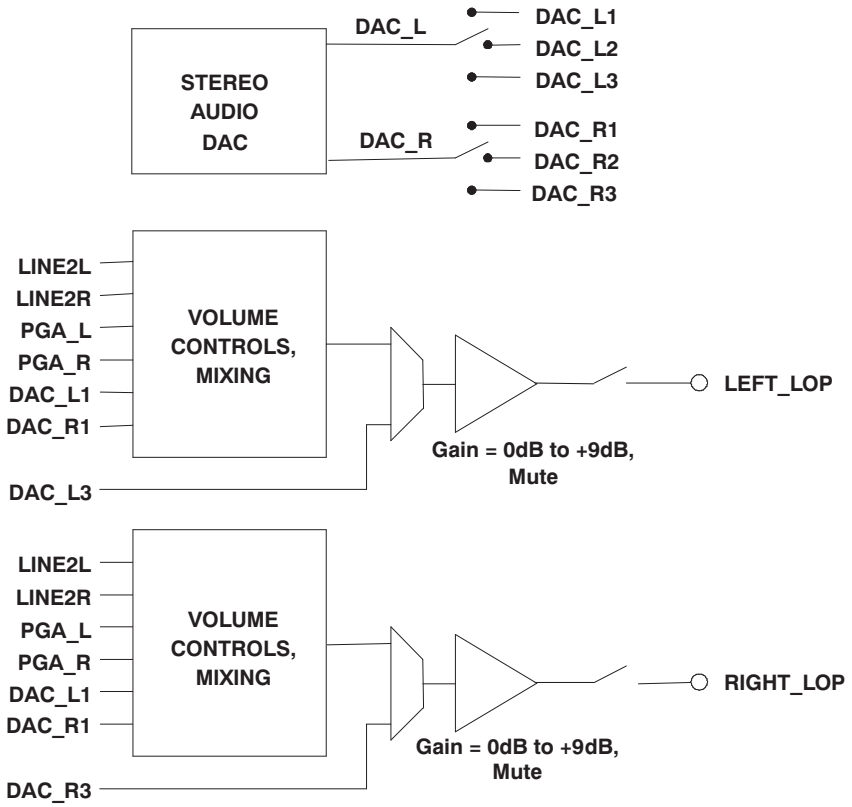

Figure 33. Architecture of the Output Stage Leading to the Line Output Drivers

查询"TLV320AIC3107"供应商

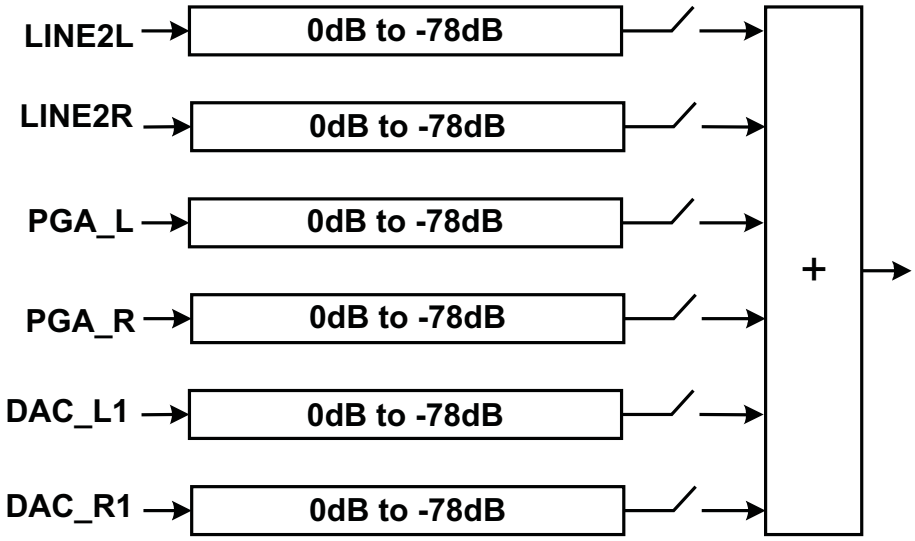

Figure 34. Detail of the Volume Control and Mixing Function Shown in Figure 26 and Figure 16

The DAC_L/R signals are the outputs of the stereo audio DAC, which can be steered by register control based on the requirements of the system. If mixing of the DAC audio with other signals is not required, and the DAC output is only needed at the stereo line outputs, then it is recommended to use the routing through path DAC_L3/R3 to the stereo line outputs. This results not only in higher quality output performance, but also in lower power operation, since the analog volume controls and mixing blocks ahead of these drivers can be powered down.

If instead the DAC analog output must be routed to multiple output drivers simultaneously (such as to LEFT_LOP and RIGHT_LOP) or must be mixed with other analog signals, then the DAC outputs should be switched through the DAC_L1/R1 path. This option provides the maximum flexibility for routing of the DAC analog signals to the output drivers

The TLV320AIC3107 includes an output level control on each output driver with limited gain adjustment from 0 dB to 9 dB. The output driver circuitry in this device are designed to provide a low distortion output while playing fullscale stereo DAC signals at a 0dB gain setting. However, a higher amplitude output can be obtained at the cost of increased signal distortion at the output. This output level control allows the user to make this tradeoff based on the requirements of the end equipment. Note that this output level control is not intended to be used as a standard output volume control. It is expected to be used only sparingly for level setting, i.e., adjustment of the fullscale output range of the device.

Each line output driver can be powered down independently of the others when it is not needed in the system. When placed into powerdown through register programming, the driver output pins will be placed into a 3-stated, high-impedance state.

ANALOG HIGH POWER OUTPUT DRIVERS

The TLV320AIC3107 includes three high power output drivers with extensive flexibility in their usage. These output drivers are individually capable of driving 30 mW each into a 16-Ω load in single-ended configuration, and two can be connected in bridge-terminated load (BTL) configuration between two driver outputs.

The high power output drivers can be configured in a variety of ways, including:

1. driving one fully differential output signals
2. driving up to three single-ended output signals
3. driving two single-ended output signals, with the remaining driver driving a fixed VCM level, for a pseudo-differential stereo output

Copyright © 2008–2009, Texas Instruments Incorporated

查询"TLV320AIC3107"供应商

The output stage architecture leading to the high power output drivers is shown in Figure 35, with the volume control and mixing blocks being effectively identical to that shown in Figure 34. Note that each of these drivers have a output level control block like those included with the line output drivers, allowing gain adjustment up to +9dB on the output signal. As in the previous case, this output level adjustment is not intended to be used as a standard volume control, but instead is included for additional fullscale output signal level control.

Two of the output drivers, HPROUT and HPLOUT, include a direct connection path for the stereo DAC outputs to be passed directly to the output drivers and bypass the analog volume controls and mixing networks, using the DAC_L2/R2 path. As in the line output case, this functionality provides the highest quality DAC playback performance with reduced power dissipation, but can only be utilized if the DAC output does not need to route to multiple output drivers simultaneously, and if mixing of the DAC output with other analog signals is not needed.

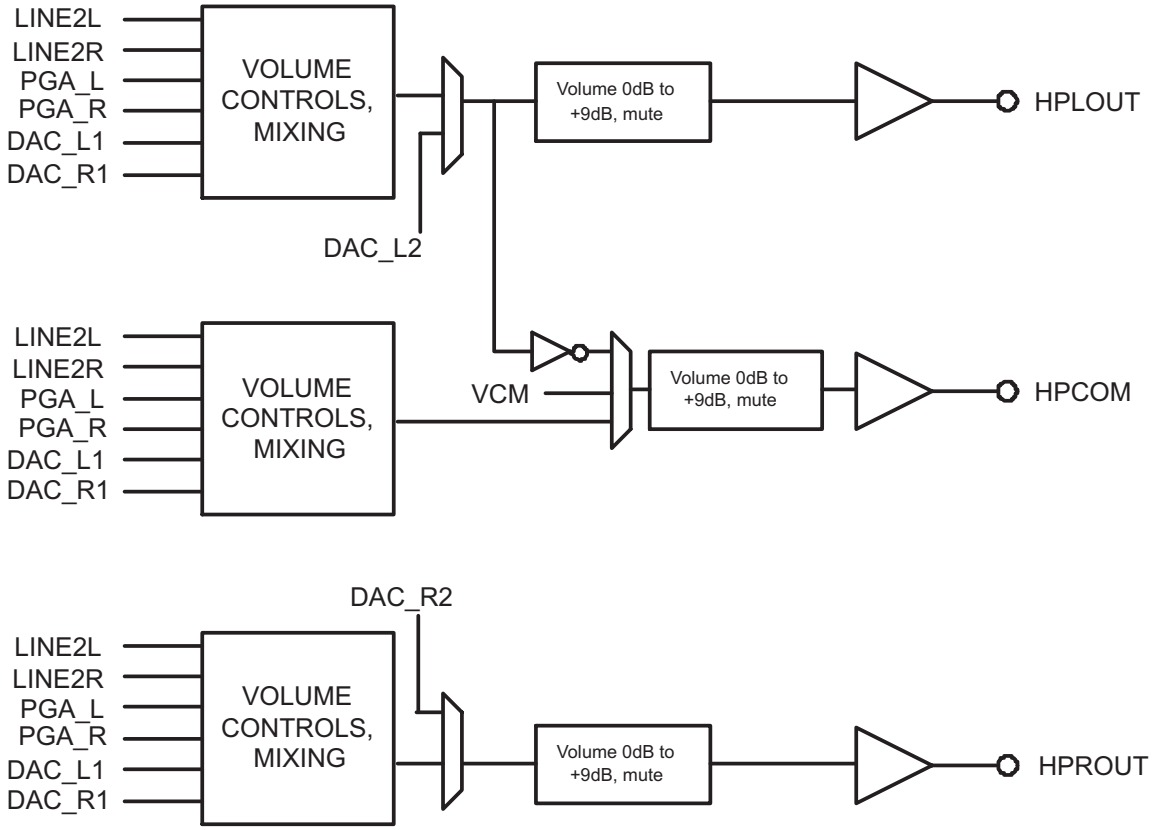

Figure 35. Architecture of the Output Stage Leading to the High Power Output Drivers

The high power output drivers include additional circuitry to avoid artifacts on the audio output during power-on and power-off transient conditions. The user should first program the type of output configuration being used in Page-0/Reg-14, to allow the device to select the optimal power-up scheme to avoid output artifacts. The power-up delay time for the high power output drivers is also programmable over a wide range of time delays, from instantaneous up to 4-sec, using Page-0/Reg-42.

When these output drivers are powered down, they can be placed into a variety of output conditions based on register programming. If lowest power operation is desired, then the outputs can be placed into a 3-state condition, and all power to the output stage is removed. However, this generally results in the output nodes drifting to rest near the upper or lower analog supply, due to small leakage currents at the pins. This then results in a longer delay requirement to avoid output artifacts during driver power-on. In order to reduce this required power-on delay, the TLV320AIC3107 includes an option for the output pins of the drivers to be weakly driven to the VCM level they would normally rest at when powered with no signal applied. This output VCM level is determined by an internal bandgap voltage reference, and thus results in extra power dissipation when the drivers are in powerdown. However, this option provides the fastest method for transitioning the drivers from powerdown to full power operation without any output artifact introduced.

Copyright © 2008–2009, Texas Instruments Incorporated

查询"TLV320AIC3107"供应商

The device includes a further option that falls between the other two – while it requires less power drawn while the output drivers are in powerdown, it also takes a slightly longer delay to power-up without artifact than if the bandgap reference is kept alive. In this alternate mode, the powered-down output driver pin is weakly driven to a voltage of approximately half the DRVDD1/2 supply level using an internal voltage divider. This voltage will not match the actual VCM of a fully powered driver, but due to the output voltage being close to its final value, a much shorter power-up delay time setting can be used and still avoid any audible output artifacts. These output voltage options are controlled in Page-0/Reg-42.

The high power output drivers can also be programmed to power up first with the output level control in a highly attenuated state, then the output driver will automatically slowly reduce the output attenuation to reach the desired output level setting programmed. This capability is enabled by default but can be enabled in Page-0/Reg-40.

SHORT CIRCUIT OUTPUT PROTECTION

The TLV320AIC3107 includes programmable short-circuit protection for the high power output drivers, for maximum flexibility in a given application. By default, if these output drivers are shorted, they will automatically limit the maximum amount of current that can be sourced to or sunk from a load, thereby protecting the device from an overcurrent condition. In this mode, the user can read Page-0/Reg-95 to determine whether the part is in short-circuit protection or not, and then decide whether to program the device to power down the output drivers. However, the device includes further capability to automatically power down an output driver whenever it does into short-circuit protection, without requiring intervention from the user. In this case, the output driver will stay in a power down condition until the user specifically programs it to power down and then power back up again, to clear the short-circuit flag.

JACK / HEADSET DETECTION

The TLV320AIC3107 includes extensive capability to monitor a headphone, microphone, or headset jack, determine if a plug has been inserted into the jack, and then determine what type of headset/headphone is wired to the plug. Figure 36 shows one configuration of the device that enables detection and determination of headset type when a pseudo-differential (capless) stereo headphone output configuration is used. The registers used for this function are Page-0/Reg 14, 37, 38, and 13. The type of headset detected can be read back from Page-0/Reg-13. Note that for best results, it is recommended to select a MICBIAS value as high as possible, and to program the output driver common-mode level at a 1.35V or 1.5V level.

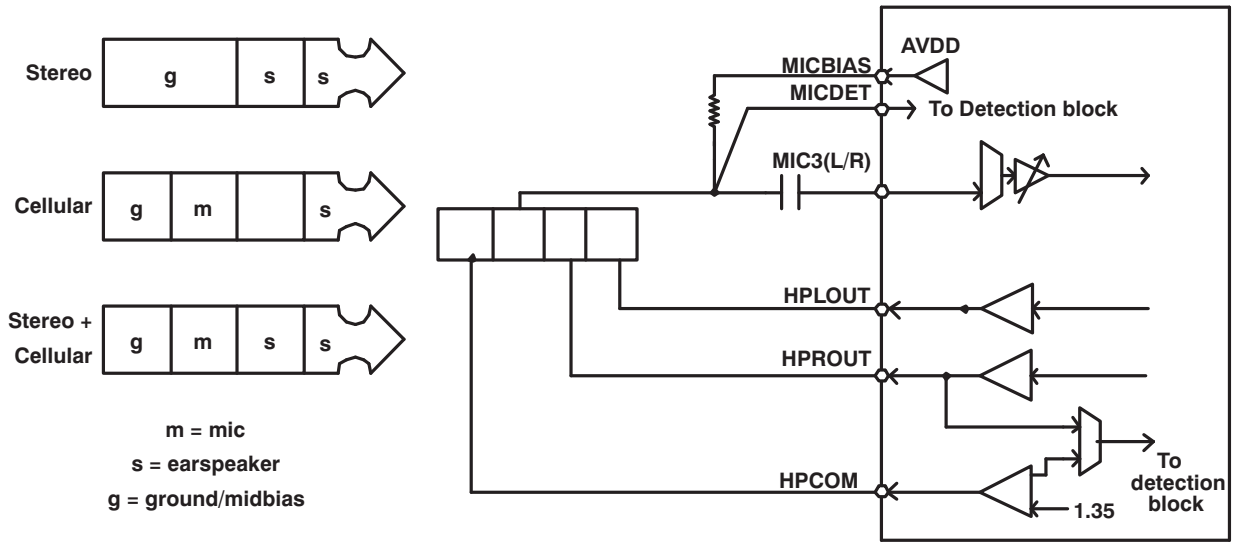

Figure 36. Configuration of Device for Jack Detection Using a Pseudo-Differential (Capless) Headphone Output Connection

A modified output configuration used when the output drivers are ac-coupled is shown in Figure 37. Note that in this mode, the device cannot accurately determine the type of headset inserted if a mono or stereo headphone.

Copyright © 2008–2009, Texas Instruments Incorporated

查询"TLV320AIC3107"供应商

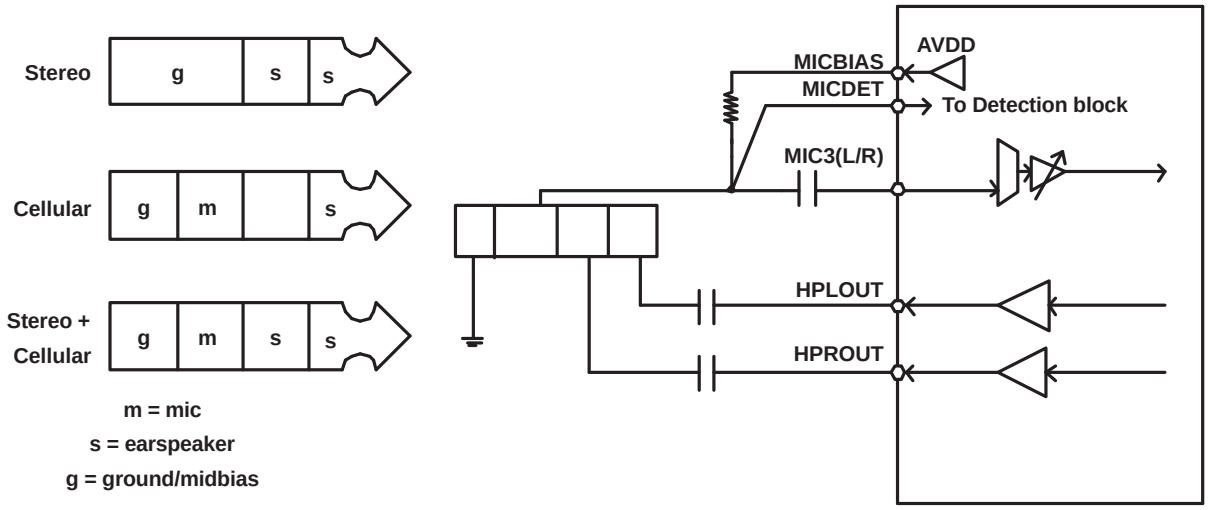

Figure 37. Configuration of Device for Jack Detection Using an ac-Coupled Stereo Headphone Output Connection

An output configuration for the case of the outputs driving fully differential stereo headphones is shown in Figure 38. In this mode there is a requirement on the jack side that either HPCOM or HPLOUT get shorted to ground if the plug is removed, which can be implemented using a spring terminal in a jack. For this mode to function properly, short-circuit detection should be enabled and configured to power-down the drivers if a short-circuit is detected. The registers that control this functionality are in Page-0/Reg-38/Bit-D2-D1.

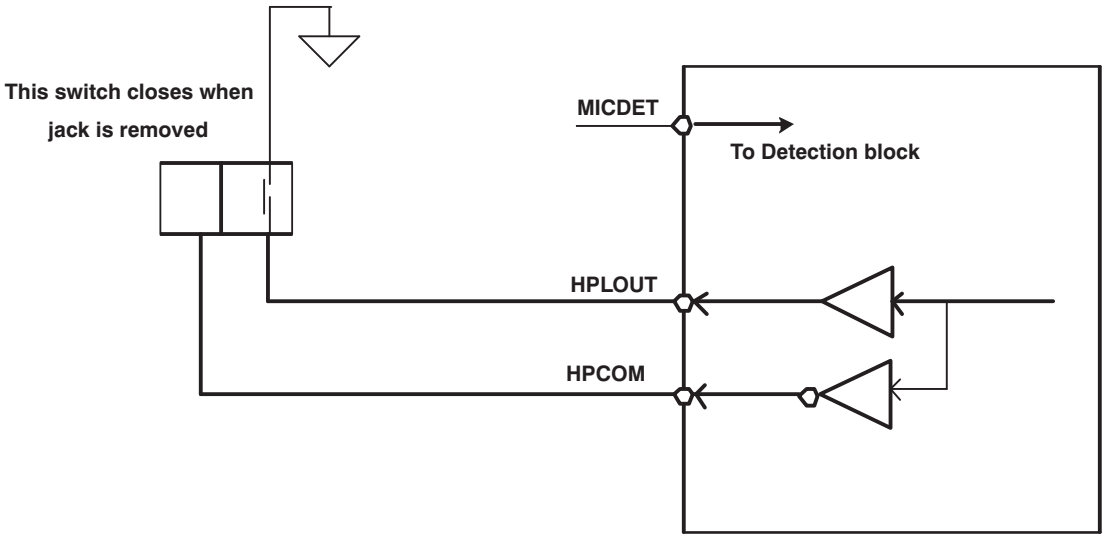

Figure 38. Configuration of Device for Jack Detection Using a Fully Differential Stereo Headphone Output Connection

查询"TLV320AIC3107"供应商

CLASS-D SPEAKER DRIVER

Differential Class-D speaker outputs are available on the SPOP and SPOM pins as shown in Figure 39. The integrated Class-D speaker amplifier can drive a one Watt audio signal into a differential 8-Ω load. The plus input to the Class-D amplifier is the same signal available at the left lineout LEFT_LOP pin. The minus input to the Class-D amplifier is an internal signal that is sourced as shown in Figure 32. A register (73) is used to enable the Class-D amp and set its gain control (0 dB to +18 dB). Following the gain control and before the outputs is a fixed +6 dB gain. Note that there are many other gains available in the signal path leading up to the Class-D amp so for best results the user must map the gains correctly.

The following initialization sequence must be written to the AIC3107 registers prior to enabling the class-D amplifier:

register data:

1. 0x00 0x0D
2. 0x0D 0x0D
3. 0x08 0x5C
4. 0x08 0x5D
5. 0x08 0x5C
6. 0x00 0x00

Also available is an analog bypass switch to allow a signal (0.35V to 2.8V) to be input at SWINP and SWINM and output at SWOUTP and SWOUTM. In a typical application, SWOUTP and SWOUTM are connected to SPOP and SPOM respectively so as to provide an alternate method of driving the 8-Ω speaker. These bypass switches have low on-resistance, so an external power amplifier can be used to drive a speaker directly through these switches. When the Bypass Switch is enabled (Register 76, D1=1), enabling the Bypass Switch Bootstrap Clock (Register 76, D0=1) is recommended.

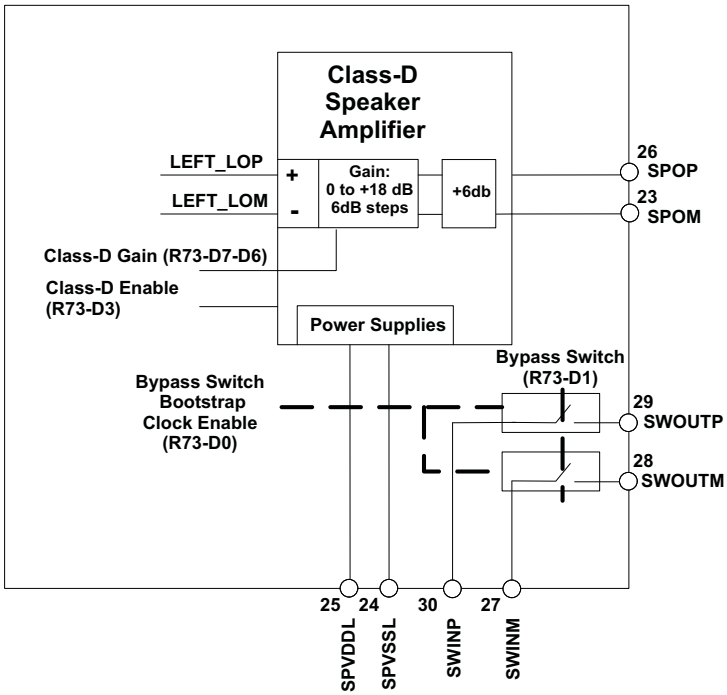

Figure 39. Differential Class-D Speaker Circuit

Copyright © 2008–2009, Texas Instruments Incorporated

查询"TLV320AIC3107"供应商

GENERAL PURPOSE I/O

'AIC3107 has a dedicated pin for General Purpose IO. This pin can be used to read status of external signals through register read when configured as General Purpose Input. When configured as General Purpose Output , this pin can also drive logic high or low. Besides these standard GPIO functions, this pin can also be used in a variety of ways such as output for internal clocks and interrupt signals. 'AIC3107 generates a variety of interrupts of use to the host processor such interrupts on jack detection, button press, short circuit detection and AGC noise detection. All these interrupts can be routed individually to the GPIO pin or can be combined by a logical OR. In the event of a combined interrupt, the user can read an internal status register to find the actual cause of interrupt. When configured as interrupt, 'AIC3107 also offers the flexibility of generating a single pulse or a train of pulses till the interrupt status register is read by the user.

CONTROL REGISTERS

The control registers for the TLV320AIC3107 are described in detail below. All registers are 8 bit in width, with D7 referring to the most significant bit of each register, and D0 referring to the least significant bit.

Page 0 / Register 0: Page Select Register

BIT(1)	READ/ WRITE	RESET VALUE	DESCRIPTION
D7–D1	X	0000000	Reserved, write only zeros to these register bits
D0	R/W	0	Page Select Bit Writing zero to this bit sets Page-0 as the active page for following register accesses. Writing a one to this bit sets Page-1 as the active page for following register accesses. It is recommended that the user read this register bit back after each write, to ensure that the proper page is being accessed for future register read/writes.

(1) When resetting registers related to routing and volume controls of output drivers, it is recommended to reset them by writing directly to the registers instead of using software reset.

Page 0 / Register 1: Software Reset Register

BIT	READ/ WRITE	RESET VALUE	DESCRIPTION
D7	W	0	Software Reset Bit 0 : Don't Care 1 : Self clearing software reset
D6–D0	W	0000000	Reserved; don't write

查询"TLV320AIC3107"供应商

Page 0 / Register 2: Codec Sample Rate Select Register

BIT	READ/ WRITE	RESET VALUE	DESCRIPTION
D7-D4	R/W	0000	ADC Sample Rate Select 0000: ADC Fs = Fsref/1 0001: ADC Fs = Fsref/1.5 0010: ADC Fs = Fsref/2 0011: ADC Fs = Fsref/2.5 0100: ADC Fs = Fsref/3 0101: ADC Fs = Fsref/3.5 0110: ADC Fs = Fsref/4 0111: ADC Fs = Fsref/4.5 1000: ADC Fs = Fsref/5 1001: ADC Fs = Fsref/5.5 1010: ADC Fs = Fsref / 6 1011–1111: Reserved, do not write these sequences.
D3-D0	R/W	0000	DAC Sample Rate Select 0000 : DAC Fs = Fsref/1 0001 : DAC Fs = Fsref/1.5 0010 : DAC Fs = Fsref/2 0011 : DAC Fs = Fsref/2.5 0100 : DAC Fs = Fsref/3 0101 : DAC Fs = Fsref/3.5 0110 : DAC Fs = Fsref/4 0111 : DAC Fs = Fsref/4.5 1000 : DAC Fs = Fsref/5 1001: DAC Fs = Fsref/5.5 1010: DAC Fs = Fsref / 6 1011–1111 : Reserved, do not write these sequences.

Page 0 / Register 3: PLL Programming Register A

BIT	READ/ WRITE	RESET VALUE	DESCRIPTION
D7	R/W	0	PLL Control Bit 0: PLL is disabled 1: PLL is enabled
D6–D3	R/W	0010	PLL Q Value 0000: Q = 16 0001 : Q = 17 0010 : Q = 2 0011 : Q = 3 0100 : Q = 4 … 1110: Q = 14 1111: Q = 15
D2–D0	R/W	000	PLL P Value 000: P = 8 001: P = 1 010: P = 2 011: P = 3 100: P = 4 101: P = 5 110: P = 6 111: P = 7

Copyright © 2008–2009, Texas Instruments Incorporated

查询"TLV320AIC3107"供应商

Page 0 / Register 4: PLL Programming Register B

BIT	READ/ WRITE	RESET VALUE	DESCRIPTION
D7–D2	R/W	000001	PLL J Value 000000: Reserved, do not write this sequence 000001: J = 1 000010: J = 2 000011: J = 3 … 111110: J = 62 111111: J = 63
D1–D0	R/W	00	Reserved, write only zeros to these bits

Page 0 / Register 5: PLL Programming Register C(1)

BIT	READ/ WRITE	RESET VALUE	DESCRIPTION
D7-D0	R/W	00000000	PLL D value – Eight most significant bits of a 14-bit unsigned integer valid values for D are from zero to 9999, represented by a 14-bit integer located in Page-0/Reg-5-6. Values should not be written into these registers that would result in a D value outside the valid range.

(1) Note that whenever the D value is changed, register 5 should be written, immediately followed by register 6. Even if only the MSB or LSB of the value changes, both registers should be written.

Page 0 / Register 6: PLL Programming Register D

BIT	READ/ WRITE	RESET VALUE	DESCRIPTION
D7–D2	R/W	00000000	PLL D value – Six least significant bits of a 14-bit unsigned integer valid values for D are from zero to 9999, represented by a 14-bit integer located in Page-0/Reg-5-6. Values should not be written into these registers that would result in a D value outside the valid range.
D1-D0	R	00	Reserved, write only zeros to these bits.

Page 0 / Register 7: Codec Datapath Setup Register

BIT	READ/ WRITE	RESET VALUE	DESCRIPTION
D7	R/W	0	Fsref setting This register setting controls timers related to the AGC time constants. 0: Fsref = 48-kHz 1: Fsref = 44.1-kHz
D6	R/W	0	ADC Dual rate control 0: ADC dual rate mode is disabled 1: ADC dual rate mode is enabled Note: ADC Dual Rate Mode must match DAC Dual Rate Mode
D5	R/W	0	DAC Dual Rate Control 0: DAC dual rate mode is disabled 1: DAC dual rate mode is enabled
D4–D3	R/W	00	Left DAC Datapath Control 00: Left DAC datapath is off (muted) 01: Left DAC datapath plays left channel input data 10: Left DAC datapath plays right channel input data 11: Left DAC datapath plays mono mix of left and right channel input data
D2–D1	R/W	00	Right DAC Datapath Control 00: Right DAC datapath is off (muted) 01: Right DAC datapath plays right channel input data 10: Right DAC datapath plays left channel input data 11: Right DAC datapath plays mono mix of left and right channel input data
D0	R/W	0	Reserved. Only write zero to this register.

Copyright © 2008–2009, Texas Instruments Incorporated

查询"TLV320AIC3107"供应商

Page 0 / Register 8: Audio Serial Data Interface Control Register A

BIT	READ/ WRITE	RESET VALUE	DESCRIPTION
D7	R/W	0	Bit Clock Directional Control 0: BCLK is an input (slave mode) 1: BCLK is an output (master mode)
D6	R/W	0	Word Clock Directional Control 0: WCLK (or GPIO1 if programmed as WCLK) is an input (slave mode) 1: WCLK (or GPIO1 if programmed as WCLK) is an output (master mode)
D5	R/W	0	Serial Output Data Driver (DOUT) 3-State Control 0: Do not 3-state DOUT when valid data is not being sent 1: 3-State DOUT when valid data is not being sent
D4	R/W	0	Bit/ Word Clock Drive Control 0: BCLK / WCLK (or GPIO1 if programmed as WCLK) will not continue to be transmitted when running in master mode if codec is powered down 1: BCLK / WCLK (or GPIO1 if programmed as WCLK) will continue to be transmitted when running in master mode - even if codec is powered down
D3	R/W	0	Reserved. Don't write to this register bit.
D2	R/W	0	3-D Effect Control 0: Disable 3-D digital effect processing 1: Enable 3-D digital effect processing
D1-D0	R/W	00	Reserved. Write Only zeroes to these bits.

Page 0 / Register 9: Audio Serial Data Interface Control Register B

BIT	READ/ WRITE	RESET VALUE	DESCRIPTION
D7–D6	R/W	00	Audio Serial Data Interface Transfer Mode 00: Serial data bus uses I^2S mode 01: Serial data bus uses DSP mode 10: Serial data bus uses right-justified mode 11: Serial data bus uses left-justified mode
D5–D4	R/W	00	Audio Serial Data Word Length Control 00: Audio data word length = 16-bits 01: Audio data word length = 20-bits 10: Audio data word length = 24-bits 11: Audio data word length = 32-bits
D3	R/W	0	Bit Clock Rate Control This register only has effect when bit clock is programmed as an output 0: Continuous-transfer mode used to determine master mode bit clock rate 1: 256-clock transfer mode used, resulting in 256 bit clocks per frame
D2	R/W	0	DAC Re-Sync 0: Don't Care 1: Re-Sync Stereo DAC with Codec Interface if the group delay changes by more than ±DACFS/4.
D1	R/W	0	ADC Re-Sync 0: Don't Care 1: Re-Sync Stereo ADC with Codec Interface if the group delay changes by more than ±ADCFS/4.
D0	R/W		Re-Sync Mute Behavior 0: Re-Sync is done without soft-muting the channel. (ADC/DAC) 1: Re-Sync is done by internally soft-muting the channel. (ADC/DAC)

Copyright © 2008–2009, Texas Instruments Incorporated

查询"TLV320AIC3107"供应商

Page 0 / Register 10: Audio Serial Data Interface Control Register C

BIT	READ/ WRITE	RESET VALUE	DESCRIPTION
D7–D0	R/W	00000000	Audio Serial Data Word Offset Control This register determines where valid data is placed or expected in each frame, by controlling the offset from beginning of the frame where valid data begins. The offset is measured from the rising edge of word clock when in DSP mode. 00000000: Data offset = 0 bit clocks 00000001: Data offset = 1 bit clock 00000010: Data offset = 2 bit clocks … Note: In continuous transfer mode the maximum offset is 17 for I^2S/LJF/RJF modes and 16 for DSP mode. In 256-clock mode, the maximum offset is 242 for I^2S/LJF/RJF and 241 for DSP modes. 11111110: Data offset = 254 bit clocks 11111111: Data offset = 255 bit clocks

Page 0 / Register 11: Audio Codec Overflow Flag Register

BIT	READ/ WRITE	RESET VALUE	DESCRIPTION
D7	R	0	Left ADC Overflow Flag This is a sticky bit, so will stay set if an overflow occurs, even if the overflow condition is removed. The register bit reset to 0 after it is read. 0: No overflow has occurred 1: An overflow has occurred
D6	R	0	Right ADC Overflow Flag This is a sticky bit, so will stay set if an overflow occurs, even if the overflow condition is removed. The register bit reset to 0 after it is read. 0: No overflow has occurred 1: An overflow has occurred
D5	R	0	Left DAC Overflow Flag This is a sticky bit, so will stay set if an overflow occurs, even if the overflow condition is removed. The register bit reset to 0 after it is read. 0: No overflow has occurred 1: An overflow has occurred
D4	R	0	Right DAC Overflow Flag This is a sticky bit, so will stay set if an overflow occurs, even if the overflow condition is removed. The register bit reset to 0 after it is read. 0: No overflow has occurred 1: An overflow has occurred
D3–D0	R/W	0001	PLL R Value 0000: R = 16 0001 : R = 1 0010 : R = 2 0011 : R = 3 0100 : R = 4 … 1110: R = 14 1111: R = 15

Copyright © 2008–2009, Texas Instruments Incorporated

查询"TLV320AIC3107"供应商

Page 0 / Register 12: Audio Codec Digital Filter Control Register

BIT	READ/ WRITE	RESET VALUE	DESCRIPTION
D7–D6	R/W	00	Left ADC Highpass Filter Control 00: Left ADC highpass filter disabled 01: Left ADC highpass filter –3 dB frequency = 0.0045 × ADC Fs 10: Left ADC highpass filter –3 dB frequency = 0.0125 × ADC Fs 11: Left ADC highpass filter –3 dB frequency = 0.025 × ADC Fs
D5–D4	R/W	00	Right ADC Highpass Filter Control 00: Right ADC highpass filter disabled 01: Right ADC highpass filter –3 dB frequency = 0.0045 × ADC Fs 10: Right ADC highpass filter –3 dB frequency = 0.0125 × ADC Fs 11: Right ADC highpass filter –3 dB frequency = 0.025 × ADC Fs
D3	R/W	0	Left DAC Digital Effects Filter Control 0: Left DAC digital effects filter disabled (bypassed) 1: Left DAC digital effects filter enabled
D2	R/W	0	Left DAC De-emphasis Filter Control 0: Left DAC de-emphasis filter disabled (bypassed) 1: Left DAC de-emphasis filter enabled
D1	R/W	0	Right DAC Digital Effects Filter Control 0: Right DAC digital effects filter disabled (bypassed) 1: Right DAC digital effects filter enabled
D0	R/W	0	Right DAC De-emphasis Filter Control 0: Right DAC de-emphasis filter disabled (bypassed) 1: Right DAC de-emphasis filter enabled

Page 0 / Register 13: Headset / Button Press Detection Register A

BIT	READ/ WRITE	RESET VALUE	DESCRIPTION
D7	R/W	0	Headset Detection Control 0: Headset detection disabled 1: Headset detection enabled
D6-D5	R	00	Headset Type Detection Results 00: No headset detected 01: Stereo headset detected 10: Cellular headset detected 11: Stereo + cellular headset detected
D4-D2	R/W	000	Headset Glitch Suppression Debounce Control for Jack Detection 000: Debounce = 16msec(sampled with 2ms clock) 001: Debounce = 32msec(sampled with 4ms clock) 010: Debounce = 64msec(sampled with 8ms clock) 011: Debounce = 128msec(sampled with 16ms clock) 100: Debounce = 256msec(sampled with 32ms clock) 101: Debounce = 512msec(sampled with 64ms clock) 110: Reserved, do not write this bit sequence to these register bits. 111: Reserved, do not write this bit sequence to these register bits.
D1-D0	R/W	00	Headset Glitch Suppression Debounce Control for Button Press 00: Debounce = 0msec 01: Debounce = 8msec(sampled with 1ms clock) 10: Debounce = 16msec(sampled with 2ms clock) 11: Debounce = 32msec(sampled with 4ms clock)

Copyright © 2008–2009, Texas Instruments Incorporated

查询"TLV320AIC3107"供应商

Page 0 / Register 14: Headset / Button Press Detection Register B

BIT	READ/ WRITE	RESET VALUE	DESCRIPTION
D7	R/W	0	Driver Capacitive Coupling 0: Programs high-power outputs for capless driver configuration 1: Programs high-power outputs for ac-coupled driver configuration
D6(1)	R/W	0	Stereo Output Driver Configuration A Note: do not set bits D6 and D3 both high at the same time. 0: A stereo fully-differential output configuration is not being used 1: A stereo fully-differential output configuration is being used
D5	R	0	Button Press Detection Flag This register is a sticky bit, and will stay set to 1 after a button press has been detected, until the register is read. Upon reading this register, the bit is reset to zero. 0: A button press has not been detected 1: A button press has been detected
D4	R	0	Headset Detection Flag 0: A headset has not been detected 1: A headset has been detected
D3(1)	R/W	0	Stereo Output Driver Configuration B Note: do not set bits D6 and D3 both high at the same time. 0: A stereo pseudo-differential output configuration is not being used 1: A stereo pseudo-differential output configuration is being used
D2–D0	R	000	Reserved. Write only zeros to these bits.

(1) Do not set D6 and D3 to 1 simultaneously

Page 0 / Register 15: Left ADC PGA Gain Control Register

BIT	READ/ WRITE	RESET VALUE	DESCRIPTION
D7	R/W	1	Left ADC PGA Mute 0: The left ADC PGA is not muted 1: The left ADC PGA is muted
D6-D0	R/W	0000000	Left ADC PGA Gain Setting 0000000: Gain = 0.0 dB 0000001: Gain = 0.5 dB 0000010: Gain = 1.0 dB … 1110110: Gain = 59.0 dB 1110111: Gain = 59.5 dB 1111000: Gain = 59.5 dB … 1111111: Gain = 59.5 dB

Page 0 / Register 16: Right ADC PGA Gain Control Register

BIT	READ/ WRITE	RESET VALUE	DESCRIPTION
D7	R/W	1	Right ADC PGA Mute 0: The right ADC PGA is not muted 1: The right ADC PGA is muted
D6-D0	R/W	0000000	Right ADC PGA Gain Setting 0000000: Gain = 0.0 dB 0000001: Gain = 0.5 dB 0000010: Gain = 1.0 dB … 1110110: Gain = 59.0 dB 1110111: Gain = 59.5 dB 1111000: Gain = 59.5 dB … 1111111: Gain = 59.5 dB

Copyright © 2008–2009, Texas Instruments Incorporated

查询"TLV320AIC3107"供应商

Page 0 / Register 17: MIC3L/R to Left ADC Control Register

BIT	READ/ WRITE	RESET VALUE	DESCRIPTION
D7-D4	R/W	1111	MIC3L Input Level Control for Left ADC PGA Mix Setting the input level control to a gain below automatically connects MIC3L to the left ADC PGA mix 0000: Input level control gain = 0.0 dB 0001: Input level control gain = –1.5 dB 0010: Input level control gain = –3.0 dB 0011: Input level control gain = –4.5 dB 0100: Input level control gain = –6.0 dB 0101: Input level control gain = –7.5 dB 0110: Input level control gain = –9.0 dB 0111: Input level control gain = –10.5 dB 1000: Input level control gain = –12.0 dB 1001–1110: Reserved. Do not write these sequences to these register bits 1111: MIC3L is not connected to the left ADC PGA
D3-D0	R/W	1111	MIC3R Input Level Control for Left ADC PGA Mix Setting the input level control to a gain below automatically connects MIC3R to the left ADC PGA mix 0000: Input level control gain = 0.0 dB 0001: Input level control gain = –1.5 dB 0010: Input level control gain = –3.0 dB 0011: Input level control gain = –4.5 dB 0100: Input level control gain = –6.0 dB 0101: Input level control gain = –7.5 dB 0110: Input level control gain = –9.0 dB 0111: Input level control gain = –10.5 dB 1000: Input level control gain = –12.0 dB 1001–1110: Reserved. Do not write these sequences to these register bits 1111: MIC3R is not connected to the left ADC PGA

Page 0 / Register 18: MIC3L/R to Right ADC Control Register

BIT	READ/ WRITE	RESET VALUE	DESCRIPTION
D7–D4	R/W	1111	MIC3L Input Level Control for Right ADC PGA Mix Setting the input level control to a gain below automatically connects MIC3L to the right ADC PGA mix 0000: Input level control gain = 0.0 dB 0001: Input level control gain = –1.5 dB 0010: Input level control gain = –3.0 dB 0011: Input level control gain = –4.5 dB 0100: Input level control gain = –6.0 dB 0101: Input level control gain = –7.5 dB 0110: Input level control gain = –9.0 dB 0111: Input level control gain = –10.5 dB 1000: Input level control gain = –12.0 dB 1001–1110: Reserved. Do not write these sequences to these register bits 1111: MIC3L is not connected to the right ADC PGA
D3–D0	R/W	1111	MIC3R Input Level Control for Right ADC PGA Mix Setting the input level control to a gain below automatically connects MIC3R to the right ADC PGA mix 0000: Input level control gain = 0.0 dB 0001: Input level control gain = –1.5 dB 0010: Input level control gain = –3.0 dB 0011: Input level control gain = –4.5 dB 0100: Input level control gain = –6.0 dB 0101: Input level control gain = –7.5 dB 0110: Input level control gain = –9.0 dB 0111: Input level control gain = –10.5 dB 1000: Input level control gain = –12.0 dB 1001–1110: Reserved. Do not write these sequences to these register bits 1111: MIC3R is not connected to right ADC PGA

Copyright © 2008–2009, Texas Instruments Incorporated

查询"TLV320AIC3107"供应商

Page 0 / Register 19: LINE1L to Left ADC Control Register

BIT	READ/ WRITE	RESET VALUE	DESCRIPTION
D7	R/W	0	LINE1L Single-Ended vs Fully Differential Control If LINE1L is selected to both left and right ADC channels, both connections must use the same configuration (single-ended or fully differential mode). 0: LINE1L is configured in single-ended mode 1: LINE1L is configured in fully differential mode
D6–D3	R/W	1111	LINE1L Input Level Control for Left ADC PGA Mix Setting the input level control to a gain below automatically connects LINE1L to the left ADC PGA mix 0000: Input level control gain = 0.0 dB 0001: Input level control gain = –1.5 dB 0010: Input level control gain = –3.0 dB 0011: Input level control gain = –4.5 dB 0100: Input level control gain = –6.0 dB 0101: Input level control gain = –7.5 dB 0110: Input level control gain = –9.0 dB 0111: Input level control gain = –10.5 dB 1000: Input level control gain = –12.0 dB 1001–1110: Reserved. Do not write these sequences to these register bits 1111: LINE1L is not connected to the left ADC PGA
D2	R/W	0	Left ADC Channel Power Control 0: Left ADC channel is powered down 1: Left ADC channel is powered up
D1–D0	R/W	00	Left ADC PGA Soft-Stepping Control 00: Left ADC PGA soft-stepping at once per Fs 01: Left ADC PGA soft-stepping at once per two Fs 10–11: Left ADC PGA soft-stepping is disabled

Page 0 / Register 20: LINE2L to Left ADC Control Register(1)

BIT	READ/ WRITE	RESET VALUE	DESCRIPTION
D7	R/W	0	LINE2L Single-Ended vs Fully Differential Control If LINE2L is selected to both left and right ADC channels, both connections must use the same configuration (single-ended or fully differential mode). 0: LINE2L is configured in single-ended mode 1: LINE2L is configured in fully differential mode
D6–D3	R/W	1111	LINE2L Input Level Control for Left ADC PGA Mix 0000: Input level control gain = 0.0 dB 0001-0011: Reserved. Do not write these sequences to these register bits 0100: Input level control gain = –6.0 dB 0101-0111: Reserved. Do not write these sequences to these register bits 1000: Input level control gain = –12.0 dB 1001-1110: Reserved. Do not write these sequences to these register bits 1111: LINE2L is not connected to the left ADC PGA
D2	R/W	0	Left ADC Channel Weak Common-Mode Bias Control 0: Left ADC channel unselected inputs are not biased weakly to the ADC common-mode voltage 1: Left ADC channel unselected inputs are biased weakly to the ADC common- mode voltage
D1-D0	R	00	Reserved. Write only zeros to these register bits

(1) LINE1R SEvsFD control is available for both left and right channels. However this setting must be same for both the channels.

查询"TLV320AIC3107"供应商

Page 0 / Register 21: LINE1R to Left ADC Control Register

BIT	READ/ WRITE	RESET VALUE	DESCRIPTION
D7	R/W	0	LINE1R Single-Ended vs Fully Differential Control If LINE1R is selected to both left and right ADC channels, both connections must use the same configuration (single-ended or fully differential mode). 0: LINE1R is configured in single-ended mode 1: LINE1R is configured in fully differential mode
D6–D3	R/W	1111	LINE1R Input Level Control for Left ADC PGA Mix Setting the input level control to a gain below automatically connects LINE1R to the left ADC PGA mix 0000: Input level control gain = 0.0 dB 0001: Input level control gain = –1.5 dB 0010: Input level control gain = –3.0 dB 0011: Input level control gain = –4.5 dB 0100: Input level control gain = –6.0 dB 0101: Input level control gain = –7.5 dB 0110: Input level control gain = –9.0 dB 0111: Input level control gain = –10.5 dB 1000: Input level control gain = –12.0 dB 1001–1110: Reserved. Do not write these sequences to these register bits 1111: LINE1R is not connected to the left ADC PGA
D2–D0	R	000	Reserved. Write only zeros to these register bits.

Page 0 / Register 22: LINE1R to Right ADC Control Register

BIT	READ/ WRITE	RESET VALUE	DESCRIPTION
D7	R/W	0	LINE1R Single-Ended vs Fully Differential Control If LINE1R is selected to both left and right ADC channels, both connections must use the same configuration (single-ended or fully differential mode). 0: LINE1R is configured in single-ended mode 1: LINE1R is configured in fully differential mode
D6–D3	R/W	1111	LINE1R Input Level Control for Right ADC PGA Mix Setting the input level control to a gain below automatically connects LINE1R to the right ADC PGA mix 0000: Input level control gain = 0.0 dB 0001: Input level control gain = –1.5 dB 0010: Input level control gain = –3.0 dB 0011: Input level control gain = –4.5 dB 0100: Input level control gain = –6.0 dB 0101: Input level control gain = –7.5 dB 0110: Input level control gain = –9.0 dB 0111: Input level control gain = –10.5 dB 1000: Input level control gain = –12.0 dB 1001–1110: Reserved. Do not write these sequences to these register bits 1111: LINE1R is not connected to the right ADC PGA
D2	R/W	0	Right ADC Channel Power Control 0: Right ADC channel is powered down 1: Right ADC channel is powered up
D1–D0	R/W	00	Right ADC PGA Soft-Stepping Control 00: Right ADC PGA soft-stepping at once per Fs 01: Right ADC PGA soft-stepping at once per two Fs 10-11: Right ADC PGA soft-stepping is disabled

Copyright © 2008–2009, Texas Instruments Incorporated

查询"TLV320AIC3107"供应商

Page 0 / Register 23: LINE2R to Right ADC Control Register

BIT	READ/ WRITE	RESET VALUE	DESCRIPTION
D7	R/W	0	LINE2R Single-Ended vs Fully Differential Control If LINE2R is selected to both left and right ADC channels, both connections must use the same configuration (single-ended or fully differential mode). 0: LINE2R is configured in single-ended mode 1: LINE2R is configured in fully differential mode
D6–D3	R/W	1111	LINE2R Input Level Control for Right ADC PGA Mix 0000: Input level control gain = 0.0 dB 0001-0011: Reserved. Do not write these sequences to these register bits 0100: Input level control gain = –6.0 dB 0101-0111: Reserved. Do not write these sequences to these register bits 1000: Input level control gain = –12.0 dB 1001-1110: Reserved. Do not write these sequences to these register bits 1111: LINE2R is not connected to the right ADC PGA
D2	R/W	0	Right ADC Channel Weak Common-Mode Bias Control 0: Right ADC channel unselected inputs are not biased weakly to the ADC common-mode voltage 1: Right ADC channel unselected inputs are biased weakly to the ADC common- mode voltage
D1–D0	R	00	Reserved. Write only zeros to these register bits

Page 0 / Register 24: LINE1L to Right ADC Control Register

BIT	READ/ WRITE	RESET VALUE	DESCRIPTION
D7	R/W	0	LINE1L Single-Ended vs Fully Differential Control If LINE1L is selected to both left and right ADC channels, both connections must use the same configuration (single-ended or fully differential mode). 0: LINE1L is configured in single-ended mode 1: LINE1L is configured in fully differential mode
D6–D3	R/W	1111	LINE1L Input Level Control for Right ADC PGA Mix Setting the input level control to a gain below automatically connects LINE1L to the right ADC PGA mix 0000: Input level control gain = 0.0 dB 0001: Input level control gain = –1.5 dB 0010: Input level control gain = –3.0 dB 0011: Input level control gain = –4.5 dB 0100: Input level control gain = –6.0 dB 0101: Input level control gain = –7.5 dB 0110: Input level control gain = –9.0 dB 0111: Input level control gain = –10.5 dB 1000: Input level control gain = –12.0 dB 1001–1110: Reserved. Do not write these sequences to these register bits 1111: LINE1L is not connected to the right ADC PGA
D2–D0	R	000	Reserved. Write only zeros to these register bits.

Page 0 / Register 25: MICBIAS Control Register

BIT	READ/ WRITE	RESET VALUE	DESCRIPTION
D7–D6	R/W	00	MICBIAS Level Control 00: MICBIAS output is powered down 01: MICBIAS output is powered to 2.0V 10: MICBIAS output is powered to 2.5V 11: MICBIAS output is connected to AVDD
D5–D0	R/W	000000	Reserved. Write only zeros to these register bits.

Copyright © 2008–2009, Texas Instruments Incorporated

查询"TLV320AIC3107"供应商

Page 0 / Register 26: Left AGC Control Register A

BIT	READ/ WRITE	RESET VALUE	DESCRIPTION
D7	R/W	0	Left AGC Enable 0: Left AGC is disabled 1: Left AGC is enabled
D6–D4	R/W	000	Left AGC Target Level 000: Left AGC target level = –5.5 dB 001: Left AGC target level = –8 dB 010: Left AGC target level = –10 dB 011: Left AGC target level = –12 dB 100: Left AGC target level = –14 dB 101: Left AGC target level = –17 dB 110: Left AGC target level = –20 dB 111: Left AGC target level = –24 dB
D3–D2	R/W	00	Left AGC Attack Time These time constants(1) will not be accurate when double rate audio mode is enabled. 00: Left AGC attack time = 8-msec 01: Left AGC attack time = 11-msec 10: Left AGC attack time = 16-msec 11: Left AGC attack time = 20-msec
D1–D0	R/W	00	Left AGC Decay Time These time constants(1) will not be accurate when double rate audio mode is enabled. 00: Left AGC decay time = 100-msec 01: Left AGC decay time = 200-msec 10: Left AGC decay time = 400-msec 11: Left AGC decay time = 500-msec

(1) Time constants are valid when DRA is not enabled. The values would change if DRA is enabled.

Page 0 / Register 27: Left AGC Control Register B

BIT	READ/ WRITE	RESET VALUE	DESCRIPTION
D7-D1	R/W	1111111	Left AGC Maximum Gain Allowed 0000000: Maximum gain = 0.0 dB 0000001: Maximum gain = 0.5 dB 0000010: Maximum gain = 1.0 dB … 1110110: Maximum gain = 59.0 dB 1110111–111111: Maximum gain = 59.5 dB
D0	R/W	0	Reserved. Write only zero to this register bit.

Page 0 / Register 28: Left AGC Control Register C

BIT	READ/ WRITE	RESET VALUE	DESCRIPTION
D7–D6	R/W	00	Noise Gate Hysteresis Level Control 00: Hysteresis = 1 dB 01: Hysteresis = 2 dB 10: Hysteresis = 4 dB 11: Hysteresis is disabled
D5–D1	R/W	00000	Left AGC Noise Threshold Control 00000: Left AGC Noise/Silence Detection disabled 00001: Left AGC noise threshold = –30 dB 00010: Left AGC noise threshold = –32 dB 00011: Left AGC noise threshold = –34 dB … 11101: Left AGC noise threshold = –86 dB 11110: Left AGC noise threshold = –88 dB 11111: Left AGC noise threshold = –90 dB
D0	R/W	0	Left AGC Clip Stepping Control 0: Left AGC clip stepping disabled 1: Left AGC clip stepping enabled

Copyright © 2008–2009, Texas Instruments Incorporated

查询"TLV320AIC3107"供应商

Page 0 / Register 29: Right AGC Control Register A

BIT	READ/ WRITE	RESET VALUE	DESCRIPTION
D7	R/W	0	Right AGC Enable 0: Right AGC is disabled 1: Right AGC is enabled
D6-D4	R/W	000	Right AGC Target Level 000: Right AGC target level = –5.5 dB 001: Right AGC target level = –8 dB 010: Right AGC target level = –10 dB 011: Right AGC target level = –12 dB 100: Right AGC target level = –14 dB 101: Right AGC target level = –17 dB 110: Right AGC target level = –20 dB 111: Right AGC target level = –24 dB
D3–D2	R/W	00	Right AGC Attack Time These time constants will not be accurate when double rate audio mode is enabled. 00: Right AGC attack time = 8-msec 01: Right AGC attack time = 11-msec 10: Right AGC attack time = 16-msec 11: Right AGC attack time = 20-msec
D1–D0	R/W	00	Right AGC Decay Time These time constants will not be accurate when double rate audio mode is enabled. 00: Right AGC decay time = 100-msec 01: Right AGC decay time = 200-msec 10: Right AGC decay time = 400-msec 11: Right AGC decay time = 500-msec

Page 0 / Register 30: Right AGC Control Register B

BIT	READ/ WRITE	RESET VALUE	DESCRIPTION
D7–D1	R/W	1111111	Right AGC Maximum Gain Allowed 0000000: Maximum gain = 0.0 dB 0000001: Maximum gain = 0.5 dB 0000010: Maximum gain = 1.0 dB … 1110110: Maximum gain = 59.0 dB 1110111–111111: Maximum gain = 59.5 dB
D0	R/W	0	Reserved. Write only zero to this register bit.

Page 0 / Register 31: Right AGC Control Register C

BIT	READ/ WRITE	RESET VALUE	DESCRIPTION
D7–D6	R/W	00	Noise Gate Hysteresis Level Control 00: Hysteresis = 1 dB 01: Hysteresis = 2 dB 10: Hysteresis = 4 dB 11: Hysteresis is disabled
D5–D1	R/W	00000	Right AGC Noise Threshold Control 00000: Right AGC Noise/Silence Detection disabled 00001: Right AGC noise threshold = –30 dB 00010: Right AGC noise threshold = –32 dB 00011: Right AGC noise threshold = –34 dB … 11101: Right AGC noise threshold = –86 dB 11110: Right AGC noise threshold = –88 dB 11111: Right AGC noise threshold = –90 dB
D0	R/W	0	Right AGC Clip Stepping Control 0: Right AGC clip stepping disabled 1: Right AGC clip stepping enabled

Copyright © 2008–2009, Texas Instruments Incorporated

查询"TLV320AIC3107"供应商

Page 0 / Register 32: Left AGC Gain Register

BIT	READ/ WRITE	RESET VALUE	DESCRIPTION
D7–D0	R	00000000	Left Channel Gain Applied by AGC Algorithm 11101000: Gain = –12.0 dB 11101001: Gain = –11.5 dB 11101010: Gain = –11.0 dB … 00000000: Gain = 0.0 dB 00000001: Gain = +0.5 dB … 01110110: Gain = +59.0 dB 01110111: Gain = +59.5 dB

Page 0 / Register 33: Right AGC Gain Register

BIT	READ/ WRITE	RESET VALUE	DESCRIPTION
D7-D0	R	00000000	Right Channel Gain Applied by AGC Algorithm 11101000: Gain = –12.0 dB 11101001: Gain = –11.5 dB 11101010: Gain = –11.0 dB … 00000000: Gain = 0.0 dB 00000001: Gain = +0.5 dB … 01110110: Gain = +59.0 dB 01110111: Gain = +59.5 dB

Page 0 / Register 34: Left AGC Noise Gate Debounce Register

BIT	READ/ WRITE	RESET VALUE	DESCRIPTION
D7–D3	R/W	00000	Left AGC Noise Detection Debounce Control These times(1) will not be accurate when double rate audio mode is enabled. 00000: Debounce = 0-msec 00001: Debounce = 0.5-msec 00010: Debounce = 1-msec 00011: Debounce = 2-msec 00100: Debounce = 4-msec 00101: Debounce = 8-msec 00110: Debounce = 16-msec 00111: Debounce = 32-msec 01000: Debounce = 64×1 = 64ms 01001: Debounce = 64×2 = 128ms 01010: Debounce = 64×3 = 192ms … 11110: Debounce = 64×23 = 1472ms 11111: Debounce = 64×24 = 1536ms
D2–D0	R/W	000	Left AGC Signal Detection Debounce Control These times(1) will not be accurate when double rate audio mode is enabled. 000: Debounce = 0-msec 001: Debounce = 0.5-msec 010: Debounce = 1-msec 011: Debounce = 2-msec 100: Debounce = 4-msec 101: Debounce = 8-msec 110: Debounce = 16-msec 111: Debounce = 32-msec

(1) Time constants are valid when DRA is not enabled. The values would change when DRA is enabled

Copyright © 2008–2009, Texas Instruments Incorporated

查询"TLV320AIC3107"供应商

Page 0 / Register 35: Right AGC Noise Gate Debounce Register

BIT	READ/ WRITE	RESET VALUE	DESCRIPTION
D7–D3	R/W	00000	Right AGC Noise Detection Debounce Control These times(1) will not be accurate when double rate audio mode is enabled. 00000: Debounce = 0-msec 00001: Debounce = 0.5-msec 00010: Debounce = 1-msec 00011: Debounce = 2-msec 00100: Debounce = 4-msec 00101: Debounce = 8-msec 00110: Debounce = 16-msec 00111: Debounce = 32-msec 01000: Debounce = 64×1 = 64ms 01001: Debounce = 64×2 = 128ms 01010: Debounce = 64×3 = 192ms … 11110: Debounce = 64×23 = 1472ms 11111: Debounce = 64×24 = 1536ms
D2–D0	R/W	000	Right AGC Signal Detection Debounce Control These times(1) will not be accurate when double rate audio mode is enabled. 000: Debounce = 0-msec 001: Debounce = 0.5-msec 010: Debounce = 1-msec 011: Debounce = 2-msec 100: Debounce = 4-msec 101: Debounce = 8-msec 110: Debounce = 16-msec 111: Debounce = 32-msec

(1) Time constants are valid when DRA is not enabled. The values would change when DRA is enabled.

Page 0 / Register 36: ADC Flag Register

BIT	READ/ WRITE	RESET VALUE	DESCRIPTION
D7	R	0	Left ADC PGA Status 0: Applied gain and programmed gain are not the same 1: Applied gain = programmed gain
D6	R	0	Left ADC Power Status 0: Left ADC is in a power down state 1: Left ADC is in a power up state
D5	R	0	Left AGC Signal Detection Status 0: Signal power is greater than noise threshold 1: Signal power is less than noise threshold
D4	R	0	Left AGC Saturation Flag 0: Left AGC is not saturated 1: Left AGC gain applied = maximum allowed gain for left AGC
D3	R	0	Right ADC PGA Status 0: Applied gain and programmed gain are not the same 1: Applied gain = programmed gain
D2	R	0	Right ADC Power Status 0: Right ADC is in a power down state 1: Right ADC is in a power up state
D1	R	0	Right AGC Signal Detection Status 0: Signal power is greater than noise threshold 1: Signal power is less than noise threshold
D0	R	0	Right AGC Saturation Flag 0: Right AGC is not saturated 1: Right AGC gain applied = maximum allowed gain for right AGC

Copyright © 2008–2009, Texas Instruments Incorporated

查询"TLV320AIC3107"供应商

Page 0 / Register 37: DAC Power and Output Driver Control Register

BIT	READ/ WRITE	RESET VALUE	DESCRIPTION
D7	R/W	0	Left DAC Power Control 0: Left DAC not powered up 1: Left DAC is powered up
D6	R/W	0	Right DAC Power Control 0: Right DAC not powered up 1: Right DAC is powered up
D5–D4	R/W	00	HPCOM Output Driver Configuration Control 00: HPCOM configured as differential of HPLOUT 01: HPCOM configured as constant VCM output 10: HPCOM configured as independent single-ended output 11: Reserved. Do not write this sequence to these register bits.
D3–D0	R	0000	Reserved. Write only zeros to these register bits.

Page 0 / Register 38: High Power Output Driver Control Register

BIT	READ/ WRITE	RESET VALUE	DESCRIPTION
D7-D3	R	00	Reserved. Write only zeros to these register bits.
D2	R/W	0	Short Circuit Protection Control 0: Short circuit protection on all high power output drivers is disabled 1: Short circuit protection on all high power output drivers is enabled
D1	R/W	0	Short Circuit Protection Mode Control 0: If short circuit protection enabled, it will limit the maximum current to the load 1: If short circuit protection enabled, it will power down the output driver automatically when a short is detected
D0	R	0	Reserved. Write only zero to this register bit.

Page 0 / Register 39: Reserved Register

BIT	READ/ WRITE	RESET VALUE	DESCRIPTION
D7–D0	R	00000000	Reserved. Do not write to this register.

Page 0 / Register 40: High Power Output Stage Control Register

BIT	READ/ WRITE	RESET VALUE	DESCRIPTION
D7–D6	R/W	00	Output Common-Mode Voltage Control 00: Output common-mode voltage = 1.35V 01: Output common-mode voltage = 1.5V 10: Output common-mode voltage = 1.65V 11: Output common-mode voltage = 1.8V
D5–D4	R/W	00	LINE2L Bypass Path Control 00: LINE2L bypass is disabled 01: LINE2L bypass uses LINE2LP single-ended 10: LINE2L bypass uses LINE2LM single-ended 11: LINE2L bypass uses LINE2LP/M differentially
D3–D2	R/W	00	LINE2R Bypass Path Control 00: LINE2R bypass is disabled 01: LINE2R bypass uses LINE2RP single-ended 10: LINE2R bypass uses LINE2RM single-ended 11: LINE2R bypass uses LINE2RP/M differentially
D1–D0	R/W	00	Output Volume Control Soft-Stepping 00: Output soft-stepping = one step per Fs 01: Output soft-stepping = one step per 2Fs 10: Output soft-stepping disabled 11: Reserved. Do not write this sequence to these register bits.

Copyright © 2008–2009, Texas Instruments Incorporated

查询"TLV320AIC3107"供应商

Page 0 / Register 41: DAC Output Switching Control Register

BIT	READ/ WRITE	RESET VALUE	DESCRIPTION
D7–D6	R/W	00	Left DAC Output Switching Control 00: Left DAC output selects DAC_L1 path 01: Left DAC output selects DAC_L3 path to left line output driver 10: Left DAC output selects DAC_L2 path to left high power output drivers 11: Reserved. Do not write this sequence to these register bits.
D5–D4	R/W	00	Right DAC Output Switching Control 00: Right DAC output selects DAC_R1 path 01: Right DAC output selects DAC_R3 path to right line output driver 10: Right DAC output selects DAC_R2 path to right high power output drivers 11: Reserved. Do not write this sequence to these register bits.
D3–D2	R/W	00	Reserved. Write only zeros to these bits.
D1–D0	R/W	00	DAC Digital Volume Control Functionality 00: Left and right DAC channels have independent volume controls 01: Left DAC volume follows the right channel control register 10: Right DAC volume follows the left channel control register 11: Left and right DAC channels have independent volume controls (same as 00)

Page 0 / Register 42: Output Driver Pop Reduction Register

BIT	READ/ WRITE	RESET VALUE	DESCRIPTION
D7-D5	R/W	000	Output Driver Power-On Delay Control 000: Driver power-on time = 0-µsec 001: Driver power-on time = 100-µsec 010: Driver power-on time = 10-msec 011: Driver power-on time = 100-msec 100: Driver power-on time = 400-msec 101: Driver power-on time = 2-sec 110–111: Reserved. Do not write these sequences to these register bits.
D4	R/W	0	Reserved. Write only zero to this register bit.
D3-D2	R/W	00	Driver Ramp-up Step Timing Control 00: Driver ramp-up step time = 0-msec 01: Driver ramp-up step time = 1-msec 10: Driver ramp-up step time = 2-msec 11: Driver ramp-up step time = 4-msec
D1	R/W	0	Weak Output Common-mode Voltage Control
			0: Weakly driven output common-mode voltage is generated from resistor divider off the AVDD supply
			1: Weakly driven output common-mode voltage is generated from bandgap reference
D0	R/W	0	Reserved. Write only zero to this register bit.

Page 0 / Register 43: Left DAC Digital Volume Control Register

BIT	READ/ WRITE	RESET VALUE	DESCRIPTION
D7	R/W	1	Left DAC Digital Mute 0: The left DAC channel is not muted 1: The left DAC channel is muted
D6–D0	R/W	0000000	Left DAC Digital Volume Control Setting 0000000: Gain = 0.0 dB 0000001: Gain = –0.5 dB 0000010: Gain = –1.0 dB … 1111101: Gain = –62.5 dB 1111110: Gain = –63.0 dB 1111111: Gain = –63.5 dB

Copyright © 2008–2009, Texas Instruments Incorporated

查询"TLV320AIC3107"供应商

Page 0 / Register 44: Right DAC Digital Volume Control Register

BIT	READ/ WRITE	RESET VALUE	DESCRIPTION
D7	R/W	1	Right DAC Digital Mute 0: The right DAC channel is not muted 1: The right DAC channel is muted
D6–D0	R/W	0000000	Right DAC Digital Volume Control Setting 0000000: Gain = 0.0 dB 0000001: Gain = –0.5 dB 0000010: Gain = –1.0 dB … 1111101: Gain = –62.5 dB 1111110: Gain = –63.0 dB 1111111: Gain = –63.5 dB

Output Stage Volume Controls

A basic analog volume control with range from 0 dB to -78 dB and mute is replicated multiple times in the output stage network, connected to each of the analog signals that route to the output stage. In addition, to enable completely independent mixing operations to be performed for each output driver, each analog signal coming into the output stage may have up to seven separate volume controls. These volume controls all have approximately 0.5 dB step programmability over most of the gain range, with steps increasing slightly at the lowest attenuations. Table 5 lists the detailed gain versus programmed setting for this basic volume control.

Table 5. Output Stage Volume Control Settings and Gains

Gain Setting	Analog Gain (dB)	Gain Setting	Analog Gain (dB)	Gain Setting	Analog Gain (dB)	Gain Setting	Analog Gain (dB)
0 0.0		30	-15.0	60	-30.1	90	-45.2
1	-0.5	31	-15.5	61	-30.6	91	-45.8
2	-1.0	32	-16.0	62	-31.1	92	-46.2
3	-1.5	33	-16.5	63	-31.6	93	-46.7
4	-2.0	34	-17.0	64	-32.1	94	-47.4
5	-2.5	35	-17.5	65	-32.6	95	-47.9
6	-3.0	36	-18.0	66	-33.1	96	-48.2
7	-3.5	37	-18.6	67	-33.6	97	-48.7
8	-4.0	38	-19.1	68	-34.1	98	-49.3
9	-4.5	39	-19.6	69	-34.6	99	-50.0
10	-5.0	40	-20.1	70	-35.1	100	-50.3
11	-5.5	41	-20.6	71	-35.7	101	-51.0
12	-6.0	42	-21.1	72	-36.1	102	-51.4
13	-6.5	43	-21.6	73	-36.7	103	-51.8
14	-7.0	44	-22.1	74	-37.1	104	-52.2
15	-7.5	45	-22.6	75	-37.7	105	-52.7
16	-8.0	46	-23.1	76	-38.2	106	-53.7
17	-8.5	47	-23.6	77	-38.7	107	-54.2
18	-9.0	48	-24.1	78	-39.2	108	-55.3
19	-9.5	49	-24.6	79	-39.7	109	-56.7
20	-10.0	50	-25.1	80	-40.2	110	-58.3
21	-10.5	51	-25.6	81	-40.7	111	-60.2
22	-11.0	52	-26.1	82	-41.2	112	-62.7
23	-11.5	53	-26.6	83	-41.7	113	-64.3
24	-12.0	54	-27.1	84	-42.2	114	-66.2
25	-12.5	55	-27.6	85	-42.7	115	-68.7
26	-13.0	56	-28.1	86	-43.2	116	-72.2

Copyright © 2008–2009, Texas Instruments Incorporated

查询"TLV320AIC3107"供应商

Table 5. Output Stage Volume Control Settings and Gains (continued)

Gain Setting	Analog Gain (dB)	Gain Setting	Analog Gain (dB)	Gain Setting	Analog Gain (dB)	Gain Setting	Analog Gain (dB)
27	-13.5	57	-28.6	87	-43.8	117	-78.3
28	-14.0	58	-29.1	88	-44.3	118–127	Mute
29	-14.5	59	-29.6	89	-44.8		

Page 0 / Register 45: LINE2L to HPLOUT Volume Control Register

BIT	READ/ WRITE	RESET VALUE	DESCRIPTION
D7	R/W	0	LINE2L Output Routing Control 0: LINE2L is not routed to HPLOUT 1: LINE2L is routed to HPLOUT
D6-D0	R/W	0000000	LINE2L to HPLOUT Analog Volume Control For 7-bit register setting versus analog gain values, see Table 5

Page 0 / Register 46: PGA_L to HPLOUT Volume Control Register

BIT	READ/ WRITE	RESET VALUE	DESCRIPTION
D7	R/W	0	PGA_L Output Routing Control 0: PGA_L is not routed to HPLOUT 1: PGA_L is routed to HPLOUT
D6-D0	R/W	0000000	PGA_L to HPLOUT Analog Volume Control For 7-bit register setting versus analog gain values, see Table 5

Page 0 / Register 47: DAC_L1 to HPLOUT Volume Control Register

BIT	READ/ WRITE	RESET VALUE	DESCRIPTION
D7	R/W	0	DAC_L1 Output Routing Control 0: DAC_L1 is not routed to HPLOUT 1: DAC_L1 is routed to HPLOUT
D6-D0	R/W	0000000	DAC_L1 to HPLOUT Analog Volume Control For 7-bit register setting versus analog gain values, see Table 5

Page 0 / Register 48: LINE2R to HPLOUT Volume Control Register

BIT	READ/ WRITE	RESET VALUE	DESCRIPTION
D7	R/W	0	LINE2R Output Routing Control 0: LINE2R is not routed to HPLOUT 1: LINE2R is routed to HPLOUT
D6-D0	R/W	0000000	LINE2R to HPLOUT Analog Volume Control For 7-bit register setting versus analog gain values, see Table 5

Page 0 / Register 49: PGA_R to HPLOUT Volume Control Register

BIT	READ/ WRITE	RESET VALUE	DESCRIPTION
D7	R/W	0	PGA_R Output Routing Control 0: PGA_R is not routed to HPLOUT 1: PGA_R is routed to HPLOUT
D6-D0	R/W	0000000	PGA_R to HPLOUT Analog Volume Control For 7-bit register setting versus analog gain values, see Table 5

Copyright © 2008–2009, Texas Instruments Incorporated

查询"TLV320AIC3107"供应商

Page 0 / Register 50: DAC_R1 to HPLOUT Volume Control Register

BIT	READ/ WRITE	RESET VALUE	DESCRIPTION
D7	R/W	0	DAC_R1 Output Routing Control 0: DAC_R1 is not routed to HPLOUT 1: DAC_R1 is routed to HPLOUT
D6-D0	R/W	0000000	DAC_R1 to HPLOUT Analog Volume Control For 7-bit register setting versus analog gain values, see Table 5

Page 0 / Register 51: HPLOUT Output Level Control Register

BIT	READ/ WRITE	RESET VALUE	DESCRIPTION
D7-D4	R/W	0000	HPLOUT Output Level Control 0000: Output level control = 0 dB 0001: Output level control = 1 dB 0010: Output level control = 2 dB ... 1000: Output level control = 8 dB 1001: Output level control = 9 dB 1010–1111: Reserved. Do not write these sequences to these register bits.
D3	R/W	0	HPLOUT Mute 0: HPLOUT is muted 1: HPLOUT is not muted
D2	R/W	1	HPLOUT Power Down Drive Control 0: HPLOUT is weakly driven to a common-mode when powered down 1: HPLOUT is 3-stated with powered down
D1	R	1	HPLOUT Volume Control Status 0: All programmed gains to HPLOUT have been applied 1: Not all programmed gains to HPLOUT have been applied yet
D0	R/W	0	HPLOUT Power Control 0: HPLOUT is not fully powered up 1: HPLOUT is fully powered up

Page 0 / Register 52: LINE2L to HPCOM Volume Control Register

BIT	READ/ WRITE	RESET VALUE	DESCRIPTION
D7	R/W	0	LINE2L Output Routing Control 0: LINE2L is not routed to HPCOM 1: LINE2L is routed to HPCOM
D6-D0	R/W	0000000	LINE2L to HPCOM Analog Volume Control For 7-bit register setting versus analog gain values, see Table 5

Page 0 / Register 53: PGA_L to HPCOM Volume Control Register

BIT	READ/ WRITE	RESET VALUE	DESCRIPTION
D7	R/W	0	PGA_L Output Routing Control 0: PGA_L is not routed to HPCOM 1: PGA_L is routed to HPCOM
D6-D0	R/W	0000000	PGA_L to HPCOM Analog Volume Control For 7-bit register setting versus analog gain values, see Table 5

Page 0 / Register 54: DAC_L1 to HPCOM Volume Control Register

BIT	READ/ WRITE	RESET VALUE	DESCRIPTION
D7	R/W	0	DAC_L1 Output Routing Control 0: DAC_L1 is not routed to HPCOM 1: DAC_L1 is routed to HPCOM
D6-D0	R/W	0000000	DAC_L1 to HPCOM Analog Volume Control For 7-bit register setting versus analog gain values, see Table 5

Copyright © 2008–2009, Texas Instruments Incorporated

查询"TLV320AIC3107"供应商

Page 0 / Register 55: LINE2R to HPCOM Volume Control Register

BIT	READ/ WRITE	RESET VALUE	DESCRIPTION
D7	R/W	0	LINE2R Output Routing Control 0: LINE2R is not routed to HPCOM 1: LINE2R is routed to HPCOM
D6-D0	R/W	0000000	LINE2R to HPCOM Analog Volume Control For 7-bit register setting versus analog gain values, see Table 5

Page 0 / Register 56: PGA_R to HPCOM Volume Control Register

BIT	READ/ WRITE	RESET VALUE	DESCRIPTION
D7	R/W	0	PGA_R Output Routing Control 0: PGA_R is not routed to HPCOM 1: PGA_R is routed to HPCOM
D6-D0	R/W	0000000	PGA_R to HPCOM Analog Volume Control For 7-bit register setting versus analog gain values, see Table 5

Page 0 / Register 57: DAC_R1 to HPCOM Volume Control Register

BIT	READ/ WRITE	RESET VALUE	DESCRIPTION
D7	R/W	0	DAC_R1 Output Routing Control 0: DAC_R1 is not routed to HPCOM 1: DAC_R1 is routed to HPCOM
D6-D0	R/W	0000000	DAC_R1 to HPCOM Analog Volume Control For 7-bit register setting versus analog gain values, see Table 5

Page 0 / Register 58: HPCOM Output Level Control Register

BIT	READ/ WRITE	RESET VALUE	DESCRIPTION
D7-D4	R/W	0000	HPCOM Output Level Control 0000: Output level control = 0 dB 0001: Output level control = 1 dB 0010: Output level control = 2 dB ... 1000: Output level control = 8 dB 1001: Output level control = 9 dB 1010–1111: Reserved. Do not write these sequences to these register bits.
D3	R/W	0	HPCOM Mute 0: HPCOM is muted 1: HPCOM is not muted
D2	R/W	1	HPCOM Power Down Drive Control 0: HPCOM is weakly driven to a common-mode when powered down 1: HPCOM is 3-stated with powered down
D1	R	1	HPCOM Volume Control Status 0: All programmed gains to HPCOM have been applied 1: Not all programmed gains to HPCOM have been applied yet
D0	R/W	0	HPCOM Power Control 0: HPCOM is not fully powered up 1: HPCOM is fully powered up

Page 0 / Register 59: LINE2L to HPROUT Volume Control Register

BIT	READ/ WRITE	RESET VALUE	DESCRIPTION
D7	R/W	0	LINE2L Output Routing Control 0: LINE2L is not routed to HPROUT 1: LINE2L is routed to HPROUT
D6-D0	R/W	0000000	LINE2L to HPROUT Analog Volume Control For 7-bit register setting versus analog gain values, see Table 5

Copyright © 2008–2009, Texas Instruments Incorporated

查询"TLV320AIC3107"供应商

Page 0 / Register 60: PGA_L to HPROUT Volume Control Register

BIT	READ/ WRITE	RESET VALUE	DESCRIPTION
D7	R/W	0	PGA_L Output Routing Control 0: PGA_L is not routed to HPROUT 1: PGA_L is routed to HPROUT
D6-D0	R/W	0000000	PGA_L to HPROUT Analog Volume Control For 7-bit register setting versus analog gain values, see Table 5

Page 0 / Register 61: DAC_L1 to HPROUT Volume Control Register

BIT	READ/ WRITE	RESET VALUE	DESCRIPTION
D7	R/W	0	DAC_L1 Output Routing Control 0: DAC_L1 is not routed to HPROUT 1: DAC_L1 is routed to HPROUT
D6-D0	R/W	0000000	DAC_L1 to HPROUT Analog Volume Control For 7-bit register setting versus analog gain values, see Table 5

Page 0 / Register 62: LINE2R to HPROUT Volume Control Register

BIT	READ/ WRITE	RESET VALUE	DESCRIPTION
D7	R/W	0	LINE2R Output Routing Control 0: LINE2R is not routed to HPROUT 1: LINE2R is routed to HPROUT
D6-D0	R/W	0000000	LINE2R to HPROUT Analog Volume Control For 7-bit register setting versus analog gain values, see Table 5

Page 0 / Register 63: PGA_R to HPROUT Volume Control Register

BIT	READ/ WRITE	RESET VALUE	DESCRIPTION
D7	R/W	0	PGA_R Output Routing Control 0: PGA_R is not routed to HPROUT 1: PGA_R is routed to HPROUT
D6-D0	R/W	0000000	PGA_R to HPROUT Analog Volume Control For 7-bit register setting versus analog gain values, see Table 5

Page 0 / Register 64: DAC_R1 to HPROUT Volume Control Register

BIT	READ/ WRITE	RESET VALUE	DESCRIPTION
D7	R/W	0	DAC_R1 Output Routing Control 0: DAC_R1 is not routed to HPROUT 1: DAC_R1 is routed to HPROUT
D6-D0	R/W	0000000	DAC_R1 to HPROUT Analog Volume Control For 7-bit register setting versus analog gain values, see Table 5

Copyright © 2008–2009, Texas Instruments Incorporated

查询"TLV320AIC3107"供应商

Page 0 / Register 65: HPROUT Output Level Control Register

BIT	READ/ WRITE	RESET VALUE	DESCRIPTION
D7-D4	R/W	0000	HPROUT Output Level Control 0000: Output level control = 0 dB 0001: Output level control = 1 dB 0010: Output level control = 2 dB ... 1000: Output level control = 8 dB 1001: Output level control = 9 dB 1010–1111: Reserved. Do not write these sequences to these register bits.
D3	R/W	0	HPROUT Mute 0: HPROUT is muted 1: HPROUT is not muted
D2	R/W	1	HPROUT Power Down Drive Control 0: HPROUT is weakly driven to a common-mode when powered down 1: HPROUT is 3-stated with powered down
D1	R	1	HPROUT Volume Control Status 0: All programmed gains to HPROUT have been applied 1: Not all programmed gains to HPROUT have been applied yet
D0	R/W	0	HPROUT Power Control 0: HPROUT is not fully powered up 1: HPROUT is fully powered up

Page 0 / Register 66: Reserved

BIT	READ/ WRITE	RESET VALUE	DESCRIPTION
D7–D0	R	00000000	Reserved. Do not write to this register.

Page 0 / Register 67: Reserved

BIT	READ/ WRITE	RESET VALUE	DESCRIPTION
D7–D0	R	00000000	Reserved. Do not write to this register.

Page 0 / Register 68: Reserved

BIT	READ/ WRITE	RESET VALUE	DESCRIPTION
D7–D0	R	00000000	Reserved. Do not write to this register.

Page 0 / Register 69: Reserved

BIT	READ/ WRITE	RESET VALUE	DESCRIPTION
D7–D0	R	00000000	Reserved. Do not write to this register.

Page 0 / Register 70: Reserved

BIT	READ/ WRITE	RESET VALUE	DESCRIPTION
D7–D0	R	00000000	Reserved. Do not write to this register.

Page 0 / Register 71: Reserved

BIT	READ/ WRITE	RESET VALUE	DESCRIPTION
D7–D0	R	00000000	Reserved. Do not write to this register.

Copyright © 2008–2009, Texas Instruments Incorporated

查询"TLV320AIC3107"供应商

Page 0 / Register 72: Reserved

BIT	READ/ WRITE	RESET VALUE	DESCRIPTION
D7–D0	R	00000000	Reserved. Do not write to this register.

Page 0 / Register 73: Class-D and Bypass Switch Control Register

BIT	READ/ WRITE	RESET VALUE	DESCRIPTION
D7-D6	R/W	00	Left Class-D amplifier gain. 00: Left Class-D amplifier gain = 0.0 dB 01: Left Class-D amplifier gain = 6.0 dB 10: Left Class-D amplifier gain = 12.0 dB 11: Left Class-D amplifier gain = 18.0 dB
D5-D4	R/W	00	Right Class-D amplifier gain 00: Right Class-D amplifier gain = 0.0 dB 01: Right Class-D amplifier gain = 6.0 dB 10: Right Class-D amplifier gain = 12.0 dB 11: Right Class-D amplifier gain = 18.0 dB
D3	W	0	Left Class-D Channel Shut-Down/Enable 0: shut down left class-D channel. 1: enable left class-D channel
D2	W	0	Right Class-D Channel Shut-Down/Enable 0: shut down right class-D channel. 1: enable right class-D channel
D1	W	0	Bypass Switch Enable 0: disable bypass switch 1: enable bypass switch
D0	R/W	0	Bypass Switch Bootstrap Clock Enable 0: disable bypass switch bootstrap clock 1: enable bypass switch bootstrap clock

Page 0 / Register 74: Reserved

BIT	READ/ WRITE	RESET VALUE	DESCRIPTION
D7–D0	R	00000000	Reserved. Do not write to this register.

Page 0 / Register 75: Reserved

BIT	READ/ WRITE	RESET VALUE	DESCRIPTION
D7–D0	R	00000000	Reserved. Do not write to this register.

Copyright © 2008–2009, Texas Instruments Incorporated

查询"TLV320AIC3107"供应商

Page 0 / Register 76: ADC DC Dither Control Register

BIT	READ/ WRITE	RESET VALUE	DESCRIPTION
D7-D4	R/W	0000	Left ADC DC Dither Level 0000: DC dither disabled 0001: DC dither 15 mV (differential) (minimum magnitude) 0010: DC dither 30 mV (differential) 0011: DC dither 45 mV (differential) 0100: DC dither 60 mV (differential) 0101: DC dither 75 mV (differential) 0110: DC dither 90 mV (differential) 0111: DC dither 105 mV (differential) (maximum magnitude) 1000: DC dither disabled 1001: DC dither -15 mV (differential) (minimum magnitude) 1010: DC dither -30 mV (differential) 1011: DC dither -45 mV (differential) 1100: DC dither -60 mV (differential) 1101: DC dither -75 mV (differential) 1110: DC dither -90 mV (differential) 1111: DC dither -105 mV (differential) (maximum magnitude)
D3-D0	R/W	0000	Right ADC DC Dither Level 0000: DC dither disabled 0001: DC dither 15 mV (differential) (minimum magnitude) 0010: DC dither 30 mV (differential) 0011: DC dither 45 mV (differential) 0100: DC dither 60 mV (differential) 0101: DC dither 75 mV (differential) 0110: DC dither 90 mV (differential) 0111: DC dither 105 mV (differential) (maximum magnitude) 1000: DC dither disabled 1001: DC dither -15 mV (differential) (minimum magnitude) 1010: DC dither -30 mV (differential) 1011: DC dither -45 mV (differential) 1100: DC dither -60 mV (differential) 1101: DC dither -75 mV (differential) 1110: DC dither -90 mV (differential) 1111: DC dither -105 mV (differential) (maximum magnitude)

Page 0 / Register 77: Reserved

BIT	READ/ WRITE	RESET VALUE	DESCRIPTION
D7–D0	R	00000000	Reserved. Do not write to this register.

Page 0 / Register 78: Reserved

BIT	READ/ WRITE	RESET VALUE	DESCRIPTION
D7–D0	R	00000000	Reserved. Do not write to this register.

Page 0 / Register 79: Reserved

BIT	READ/ WRITE	RESET VALUE	DESCRIPTION
D7–D0	R	00000000	Reserved. Do not write to this register.

Page 0 / Register 80: LINE2L to LEFT_LOP Volume Control Register

BIT	READ/ WRITE	RESET VALUE	DESCRIPTION
D7	R/W	0	LINE2L Output Routing Control 0: LINE2L is not routed to LEFT_LOP 1: LINE2L is routed to LEFT_LOP
D6-D0	R/W	0000000	LINE2L to LEFT_LOP Analog Volume Control For 7-bit register setting versus analog gain values, see Table 5

查询"TLV320AIC3107"供应商

Page 0 / Register 81: PGA_L to LEFT_LOP Volume Control Register

BIT	READ/ WRITE	RESET VALUE	DESCRIPTION
D7	R/W	0	PGA_L Output Routing Control 0: PGA_L is not routed to LEFT_LOP 1: PGA_L is routed to LEFT_LOP
D6-D0	R/W	0000000	PGA_L to LEFT_LOP Analog Volume Control For 7-bit register setting versus analog gain values, see Table 5

Page 0 / Register 82: DAC_L1 to LEFT_LOP Volume Control Register

BIT	READ/ WRITE	RESET VALUE	DESCRIPTION
D7	R/W	0	DAC_L1 Output Routing Control 0: DAC_L1 is not routed to LEFT_LOP 1: DAC_L1 is routed to LEFT_LOP
D6-D0	R/W	0000000	DAC_L1 to LEFT_LOP Analog Volume Control For 7-bit register setting versus analog gain values, see Table 5

Page 0 / Register 83: LINE2R to LEFT_LOP Volume Control Register

BIT	READ/ WRITE	RESET VALUE	DESCRIPTION
D7	R/W	0	LINE2R Output Routing Control 0: LINE2R is not routed to LEFT_LOP 1: LINE2R is routed to LEFT_LOP
D6-D0	R/W	0000000	LINE2R to LEFT_LOP Analog Volume Control For 7-bit register setting versus analog gain values, see Table 5

Page 0 / Register 84: PGA_R to LEFT_LOP Volume Control Register

BIT	READ/ WRITE	RESET VALUE	DESCRIPTION
D7	R/W	0	PGA_R Output Routing Control 0: PGA_R is not routed to LEFT_LOP 1: PGA_R is routed to LEFT_LOP
D6-D0	R/W	0000000	PGA_R to LEFT_LOP Analog Volume Control For 7-bit register setting versus analog gain values, see Table 5

Page 0 / Register 85: DAC_R1 to LEFT_LOP Volume Control Register

BIT	READ/ WRITE	RESET VALUE	DESCRIPTION
D7	R/W	0	DAC_R1 Output Routing Control 0: DAC_R1 is not routed to LEFT_LOP 1: DAC_R1 is routed to LEFT_LOP
D6-D0	R/W	0000000	DAC_R1 to LEFT_LOP Analog Volume Control For 7-bit register setting versus analog gain values, see Table 5

Copyright © 2008–2009, Texas Instruments Incorporated

查询"TLV320AIC3107"供应商

Page 0 / Register 86: LEFT_LOP Output Level Control Register

BIT	READ/ WRITE	RESET VALUE	DESCRIPTION
D7-D4	R/W	0000	LEFT_LOP Output Level Control 0000: Output level control = 0 dB 0001: Output level control = 1 dB 0010: Output level control = 2 dB ... 1000: Output level control = 8 dB 1001: Output level control = 9 dB 1010–1111: Reserved. Do not write these sequences to these register bits.
D3	R/W	0	LEFT_LOP Mute 0: LEFT_LOP is muted 1: LEFT_LOP is not muted
D2	R	0	Reserved. Don't write to this register bit.
D1	R	1	LEFT_LOP Volume Control Status 0: All programmed gains to LEFT_LOP have been applied 1: Not all programmed gains to LEFT_LOP have been applied yet
D0	R	0	LEFT_LOP Power Status 0: LEFT_LOP is not fully powered up 1: LEFT_LOP is fully powered up

Page 0 / Register 87: LINE2L to RIGHT_LOP Volume Control Register

BIT	READ/ WRITE	RESET VALUE	DESCRIPTION
D7	R/W	0	LINE2L Output Routing Control 0: LINE2L is not routed to RIGHT_LOP 1: LINE2L is routed to RIGHT_LOP
D6-D0	R/W	0000000	LINE2L to RIGHT_LOP Analog Volume Control For 7-bit register setting versus analog gain values, see Table 5

Page 0 / Register 88: PGA_L to RIGHT_LOP Volume Control Register

BIT	READ/ WRITE	RESET VALUE	DESCRIPTION
D7	R/W	0	PGA_L Output Routing Control 0: PGA_L is not routed to RIGHT_LOP 1: PGA_L is routed to RIGHT_LOP
D6-D0	R/W	0000000	PGA_L to RIGHT_LOP Analog Volume Control For 7-bit register setting versus analog gain values, see Table 5

Page 0 / Register 89: DAC_L1 to RIGHT_LOP Volume Control Register

BIT	READ/ WRITE	RESET VALUE	DESCRIPTION
D7	R/W	0	DAC_L1 Output Routing Control 0: DAC_L1 is not routed to RIGHT_LOP 1: DAC_L1 is routed to RIGHT_LOP
D6-D0	R/W	0000000	DAC_L1 to RIGHT_LOP Analog Volume Control For 7-bit register setting versus analog gain values, see Table 5

Page 0 / Register 90: LINE2R to RIGHT_LOP Volume Control Register

BIT	READ/ WRITE	RESET VALUE	DESCRIPTION
D7	R/W	0	LINE2R Output Routing Control 0: LINE2R is not routed to RIGHT_LOP 1: LINE2R is routed to RIGHT_LOP
D6-D0	R/W	0000000	LINE2R to RIGHT_LOP Analog Volume Control For 7-bit register setting versus analog gain values, see Table 5

Copyright © 2008–2009, Texas Instruments Incorporated

查询"TLV320AIC3107"供应商

Page 0 / Register 91: PGA_R to RIGHT_LOP Volume Control Register

BIT	READ/ WRITE	RESET VALUE	DESCRIPTION
D7	R/W	0	PGA_R Output Routing Control 0: PGA_R is not routed to RIGHT_LOP 1: PGA_R is routed to RIGHT_LOP
D6-D0	R/W	0000000	PGA_R to RIGHT_LOP Analog Volume Control For 7-bit register setting versus analog gain values, see Table 5

Page 0 / Register 92: DAC_R1 to RIGHT_LOP Volume Control Register

BIT	READ/ WRITE	RESET VALUE	DESCRIPTION
D7	R/W	0	DAC_R1 Output Routing Control 0: DAC_R1 is not routed to RIGHT_LOP 1: DAC_R1 is routed to RIGHT_LOP
D6-D0	R/W	0000000	DAC_R1 to RIGHT_LOP Analog Volume Control For 7-bit register setting versus analog gain values, see Table 5

Page 0 / Register 93: RIGHT_LOP Output Level Control Register

BIT	READ/ WRITE	RESET VALUE	DESCRIPTION
D7-D4	R/W	0000	RIGHT_LOP Output Level Control 0000: Output level control = 0 dB 0001: Output level control = 1 dB 0010: Output level control = 2 dB ... 1000: Output level control = 8 dB 1001: Output level control = 9 dB 1010–1111: Reserved. Do not write these sequences to these register bits.
D3	R/W	0	RIGHT_LOP Mute 0: RIGHT_LOP is muted 1: RIGHT_LOP is not muted
D2	R	0	Reserved. Don't write to this register bit.
D1	R	1	RIGHT_LOP Volume Control Status 0: All programmed gains to RIGHT_LOP have been applied 1: Not all programmed gains to RIGHT_LOP have been applied yet
D0	R	0	RIGHT_LOP Power Status 0: RIGHT_LOP is not fully powered up 1: RIGHT_LOP is fully powered up

Copyright © 2008–2009, Texas Instruments Incorporated

查询"TLV320AIC3107"供应商

Page 0 / Register 94: Module Power Status Register

BIT	READ/ WRITE	RESET VALUE	DESCRIPTION
D7	R	0	Left DAC Power Status 0: Left DAC not fully powered up 1: Left DAC fully powered up
D6	R	0	Right DAC Power Status 0: Right DAC not fully powered up 1: Right DAC fully powered up
D5	R	0	Reserved. Do not write to this register bit.
D4	R	0	LEFT_LOP Power Status 0: LEFT_LOP output driver powered down 1: LEFT_LOP output driver powered up
D3	R	0	RIGHT_LOP Power Status 0: RIGHT_LOP is not fully powered up 1: RIGHT_LOP is fully powered up
D2	R	0	HPLOUT Driver Power Status 0: HPLOUT Driver is not fully powered up 1: HPLOUT Driver is fully powered up
D1	R	0	HPROUT Driver Power Status 0: HPROUT Driver is not fully powered up 1: HPROUT Driver is fully powered up
D0	R	0	Reserved. Do not write to this register bit.

Page 0 / Register 95: Output Driver Short Circuit Detection Status Register

BIT	READ/ WRITE	RESET VALUE	DESCRIPTION
D7	R	0	HPLOUT Short Circuit Detection Status 0: No short circuit detected at HPLOUT 1: Short circuit detected at HPLOUT
D6	R	0	HPROUT Short Circuit Detection Status 0: No short circuit detected at HPROUT 1: Short circuit detected at HPROUT
D5	R	0	HPCOM Short Circuit Detection Status 0: No short circuit detected at HPCOM 1: Short circuit detected at HPCOM
D4	R	0	Reserved. Do not write to this register bit.
D3	R	0	HPCOM Power Status 0: HPCOM is not fully powered up 1: HPCOM is fully powered up
D2-D0	R	0	Reserved. Do not write to these register bits.

Copyright © 2008–2009, Texas Instruments Incorporated

查询"TLV320AIC3107"供应商

Page 0 / Register 96: Sticky Interrupt Flags Register

BIT	READ/ WRITE	RESET VALUE	DESCRIPTION
D7	R	0	HPLOUT Short Circuit Detection Status 0: No short circuit detected at HPLOUT driver 1: Short circuit detected at HPLOUT driver
D6	R	0	HPROUT Short Circuit Detection Status 0: No short circuit detected at HPROUT driver 1: Short circuit detected at HPROUT driver
D5	R	0	HPCOM Short Circuit Detection Status 0: No short circuit detected at HPCOM driver 1: Short circuit detected at HPCOM driver
D4	R	0	Reserved. Do not write to this register bit.
D3	R	0	Button Press Detection Status 0: No Headset Button Press detected 1: Headset Button Pressed
D2	R	0	Headset Detection Status 0: No Headset insertion/removal is detected 1: Headset insertion/removal is detected
D1	R	0	Left ADC AGC Noise Gate Status 0: Left ADC Signal Power Greater than Noise Threshold for Left AGC 1: Left ADC Signal Power Lower than Noise Threshold for Left AGC
D0	R	0	Right ADC AGC Noise Gate Status 0: Right ADC Signal Power Greater than Noise Threshold for Right AGC 1: Right ADC Signal Power Lower than Noise Threshold for Right AGC

Page 0 / Register 97: Real-time Interrupt Flags Register

BIT	READ/ WRITE	RESET VALUE	DESCRIPTION
D7	R	0	HPLOUT Short Circuit Detection Status 0: No short circuit detected at HPLOUT driver 1: Short circuit detected at HPLOUT driver
D6	R	0	HPROUT Short Circuit Detection Status 0: No short circuit detected at HPROUT driver 1: Short circuit detected at HPROUT driver
D5	R	0	HPCOM Short Circuit Detection Status 0: No short circuit detected at HPCOM driver 1: Short circuit detected at HPCOM driver
D4	R	0	Reserved. Do not write to this register bit.
D3	R	0	Button Press Detection Status (1) 0: No Headset Button Press detected 1: Headset Button Pressed
D2	R	0	Headset Detection Status 0: No Headset is detected 1: Headset is detected
D1	R	0	Left ADC AGC Noise Gate Status 0: Left ADC Signal Power Greater than Noise Threshold for Left AGC 1: Left ADC Signal Power Lower than Noise Threshold for Left AGC
D0	R	0	Right ADC AGC Noise Gate Status 0: Right ADC Signal Power Greater than Noise Threshold for Right AGC 1: Right ADC Signal Power Lower than Noise Threshold for Right AGC

(1) This bit is a sticky bit, cleared only when page 0, register 14 is read.

Copyright © 2008–2009, Texas Instruments Incorporated

查询"TLV320AIC3107"供应商

Page 0 / Register 98: GPIO1 Control Register

BIT	READ/ WRITE	RESET VALUE	DESCRIPTION
D7-D4	R/W	0000	GPIO1 Output Control 0000: GPIO1 is disabled 0001: GPIO1 used for audio serial data bus ADC word clock 0010: GPIO1 output = clock mux output divided by 1 (M=1) 0011: GPIO1 output = clock mux output divided by 2 (M=2) 0100: GPIO1 output = clock mux output divided by 4 (M=4) 0101: GPIO1 output = clock mux output divided by 8 (M=8) 0110: GPIO1 output = short circuit interrupt 0111: GPIO1 output = AGC noise interrupt 1000: GPIO1 = general purpose input 1001: GPIO1 = general purpose output 1010: Reserved. Do not write this sequence to these bits. 1011: GPIO1 = word clock for audio serial data bus (programmable as input or output) 1100: GPIO1 output = hook-switch/button press interrupt (interrupt polarity: active high, typical interrupt duration: button pressed time + clock resolution. Clock resolution depends upon debounce programmability. Typical interrupt delay from button: debounce duration + 0.5ms) 1101: GPIO1 output = jack/headset detection interrupt 1110: GPIO1 output = jack/headset detection interrupt OR button press interrupt 1111: GPIO1 output = jack/headset detection OR button press OR Short Circuit detection OR AGC Noise detection interrupt
D3	R/W	0	GPIO1 Clock Mux Output Control 0: GPIO1 clock mux output = PLL output 1: GPIO1 clock mux output = clock divider mux output
D2	R/W	0	GPIO1 Interrupt Duration Control 0: GPIO1 Interrupt occurs as a single active-high pulse of typical duration 2ms. 1: GPIO1 Interrupt occurs as continuous pulses until the Interrupt Flags register (register 96) is read by the host
D1	R	0	GPIO1 General Purpose Input Value 0: A logic-low level is input to GPIO1 1: A logic-high level is input to GPIO1
D0	R/W	0	GPIO1 General Purpose Output Value 0: GPIO1 outputs a logic-low level 1: GPIO1 outputs a logic-high level

查询"TLV320AIC3107"供应商

Page 0 / Register 99: Reserved

BIT	READ/ WRITE	RESET VALUE	DESCRIPTION
D7–D0	R	00000000	Reserved. Do not write to this register.

Page 0 / Register 100: Reserved

BIT	READ/ WRITE	RESET VALUE	DESCRIPTION
D7–D0	R	00000000	Reserved. Do not write to this register.

Page 0 / Register 101: CODEC CLKIN Source Selection Register

BIT	READ/ WRITE	RESET VALUE	DESCRIPTION
D7–D1	R	0	Reserved. Do not write to these register bits.
D0	R/W	0	CODEC_CLKIN Source Selection 0: CODEC_CLKIN uses PLLDIV_OUT 1: CODEC_CLKIN uses CLKDIV_OUT

Page 0 / Register 102: Clock Generation Control Register

BIT	READ/ WRITE	RESET VALUE	DESCRIPTION
D7-D6	R/W	00	CLKDIV_IN Source Selection 00: CLKDIV_IN uses MCLK 01: Reserved. Do not use. 10: CLKDIV_IN uses BCLK 11: Reserved. Do not use.
D5-D4	R/W	00	PLLCLK_IN Source Selection 00: PLLCLK_IN uses MCLK 01: Reserved. Do not use. 10: PLLCLK _IN uses BCLK 11: Reserved. Do not use.
D3-D0	R/W	0010	PLL Clock Divider N Value 0000: N=16 0001: N=17 0010: N=2 0011: N=3 … 1111: N=15

Page 0 / Register 103: Left AGC New Programmable Attack Time Register

BIT	READ/ WRITE	RESET VALUE	DESCRIPTION
D7	R/W	0	Attack Time Register Selection 0: Attack time for the Left AGC is generated from Register 26. 1: Attack time for the Left AGC is generated from this Register.
D6-D5	R/W	00	Baseline AGC Attack time 00: Left AGC Attack time = 7-msec 01: Left AGC Attack time = 8-msec 10: Left AGC Attack time = 10-msec 11: Left AGC Attack time = 11-msec
D4-D2	R/W	000	Multiplication Factor for Baseline AGC 000: Multiplication factor for the baseline AGC Attack time = 1 001: Multiplication factor for the baseline AGC Attack time = 2 010: Multiplication factor for the baseline AGC Attack time = 4 011: Multiplication factor for the baseline AGC Attack time = 8 100: Multiplication factor for the baseline AGC Attack time = 16 101: Multiplication factor for the baseline AGC Attack time = 32 110: Multiplication factor for the baseline AGC Attack time = 64 111: Multiplication factor for the baseline AGC Attack time = 128
D1-D0	R/W	00	Reserved. Write only zero to these register bits.

Copyright © 2008–2009, Texas Instruments Incorporated

查询"TLV320AIC3107"供应商

Page 0 / Register 104: Left AGC Programmable Decay Time Register(1)

BIT	READ/ WRITE	RESET VALUE	DESCRIPTION
D7	R/W	0	Decay Time Register Selection 0: Decay time for the Left AGC is generated from Register 26. 1: Decay time for the Left AGC is generated from this Register.
D6-D5	R/W	00	Baseline AGC Decay time 00: Left AGC Decay time = 50-msec 01: Left AGC Decay time = 150-msec 10: Left AGC Decay time = 250-msec 11: Left AGC Decay time = 350-msec
D4-D2	R/W	000	Multiplication Factor for Baseline AGC 000: Multiplication factor for the baseline AGC Decay time = 1 001: Multiplication factor for the baseline AGC Decay time = 2 010: Multiplication factor for the baseline AGC Decay time = 4 011: Multiplication factor for the baseline AGC Decay time = 8 100: Multiplication factor for the baseline AGC Decay time = 16 101: Multiplication factor for the baseline AGC Decay time = 32 110: Multiplication factor for the baseline AGC Decay time = 64 111: Multiplication factor for the baseline AGC Decay time = 128
D1-D0	R/W	00	Reserved. Write only zero to these register bits.

(1) Decay time is limited based on NADC ratio that is selected. For
NADC = 1, Max Decay time = 4 seconds
NADC = 1.5, Max Decay time = 5.6 seconds
NADC = 2, Max Decay time = 8 seconds
NADC = 2.5, Max Decay time = 9.6 seconds
NADC = 3 or 3.5, Max Decay time = 11.2 seconds
NADC = 4 or 4.5, Max Decay time = 16 seconds
NADC = 5, Max Decay time = 19.2 seconds
NADC = 5.5 or 6, Max Decay time = 22.4 seconds

Page 0 / Register 105: Right AGC Programmable Attack Time Register

BIT	READ/ WRITE	RESET VALUE	DESCRIPTION
D7	R/W	0	Attack Time Register Selection 0: Attack time for the Right AGC is generated from Register 29. 1: Attack time for the Right AGC is generated from this Register.
D6-D5	R/W	00	Baseline AGC Attack time 00: Right AGC Attack time = 7-msec 01: Right AGC Attack time = 8-msec 10: Right AGC Attack time = 10-msec 11: Right AGC Attack time = 11-msec
D4-D2	R/W	000	Multiplication Factor for Baseline AGC 000: Multiplication factor for the baseline AGC Attack time = 1 001: Multiplication factor for the baseline AGC Attack time = 2 010: Multiplication factor for the baseline AGC Attack time = 4 011: Multiplication factor for the baseline AGC Attack time = 8 100: Multiplication factor for the baseline AGC Attack time = 16 101: Multiplication factor for the baseline AGC Attack time = 32 110: Multiplication factor for the baseline AGC Attack time = 64 111: Multiplication factor for the baseline AGC Attack time = 128
D1-D0	R/W	00	Reserved. Write only zero to these register bits.

Copyright © 2008–2009, Texas Instruments Incorporated

查询"TLV320AIC3107"供应商

Page 0 / Register 106: Right AGC New Programmable Decay Time Register(1)

BIT	READ/ WRITE	RESET VALUE	DESCRIPTION
D7	R/W	0	Decay Time Register Selection 0: Decay time for the Right AGC is generated from Register 29. 1: Decay time for the Right AGC is generated from this Register.
D6-D5	R/W	00	Baseline AGC Decay time 00: Right AGC Decay time = 50-msec 01: Right AGC Decay time = 150-msec 10: Right AGC Decay time = 250-msec 11: Right AGC Decay time = 350-msec
D4-D2	R/W	000	Multiplication Factor for Baseline AGC 000: Multiplication factor for the baseline AGC Decay time = 1 001: Multiplication factor for the baseline AGC Decay time = 2 010: Multiplication factor for the baseline AGC Decay time = 4 011: Multiplication factor for the baseline AGC Decay time = 8 100: Multiplication factor for the baseline AGC Decay time = 16 101: Multiplication factor for the baseline AGC Decay time = 32 110: Multiplication factor for the baseline AGC Decay time = 64 111: Multiplication factor for the baseline AGC Decay time = 128
D1-D0	R/W	00	Reserved. Write only zero to these register bits.

(1) Decay time is limited based on NADC ratio that is selected. For
NADC = 1, Max Decay time = 4 seconds
NADC = 1.5, Max Decay time = 5.6 seconds
NADC = 2, Max Decay time = 8 seconds
NADC = 2.5, Max Decay time = 9.6 seconds
NADC = 3 or 3.5, Max Decay time = 11.2 seconds
NADC = 4 or 4.5, Max Decay time = 16 seconds
NADC = 5, Max Decay time = 19.2 seconds
NADC = 5.5 or 6, Max Decay time = 22.4 seconds

Page 0 / Register 107: New Programmable ADC Digital Path and I^2C Bus Condition Register

BIT	READ/ WRITE	RESET VALUE	DESCRIPTION
D7	R/W	0	Left Channel High Pass Filter Coefficient Selection 0: Default Coefficients are used when ADC High Pass is enabled. 1: Programmable Coefficients are used when ADC High Pass is enabled.
D6	R/W	0	Right Channel High Pass Filter Coefficient Selection 0: Default Coefficients are used when ADC High Pass is enabled. 1: Programmable Coefficients are used when ADC High Pass is enabled.
D5-D4	R/W	00	Reserved. Write only zeroes to these bits.
D3	R/W	0	ADC Digital output to Programmable Filter Path Selection 0: No additional Programmable Filters other than the HPF are used for the ADC. 1: The Programmable Filter is connected to ADC output, if both DACs are powered down.
D2	R/W	0	I^2C Bus Condition Detector 0: Internal logic is enabled to detect an I^2C bus error, and clears the bus error condition. 1: Internal logic is disabled to detect an I^2C bus error.
D1	R	0	Reserved. Write only zero to these register bits.
D0	R	0	I^2C Bus error detection status 0: I^2C bus error is not detected 1: I^2C bus error is detected. This bit is cleared by reading this register.

Copyright © 2008–2009, Texas Instruments Incorporated

查询"TLV320AIC3107"供应商

Page 0 / Register 108: Passive Analog Signal Bypass Selection During Powerdown Register(1)

BIT	READ/ WRITE	RESET VALUE	DESCRIPTION
D7	R/W	0	Reserved. Write only zero to this register bit.
D6	R/W	0	LINE2RP Path Selection 0: Normal Signal Path 1: Signal is routed by a switch to RIGHT_LOP
D5	R/W	0	Reserved. Write only zero to this register bit.
D4	R/W	0	LINE1RP Path Selection 0: Normal Signal Path 1: Signal is routed by a switch to RIGHT_LOP
D3	R/W	0	LINE2LM Path Selection 0: Normal Signal Path 1: Signal is routed by a switch to LEFT_LOM (Internal Signal)
D2	R/W	0	LINE2LP Path Selection 0: Normal Signal Path 1: Signal is routed by a switch to LEFT_LOP
D1	R/W	0	LINE1LM Path Selection 0: Normal Signal Path 1: Signal is routed by a switch to LEFT_LOM (Internal Signal)
D0	R/W	0	LINE1LP Path Selection 0: Normal Signal Path 1: Signal is routed by a switch to LEFT_LOP

(1) Based on the setting above, if BOTH LINE1 and LINE2 inputs are routed to the output at the same time, then the two switches used for the connection short the two input signals together on the output pins. The shorting resistance between the two input pins is two times the bypass switch resistance ($R_{DS(on)}$). In general this condition of shorting should be avoided, as higher drive currents are likely to occur on the circuitry that feeds these two input pins of this device.

Page 0 / Register 109: DAC Quiescent Current Adjustment Register

BIT	READ/ WRITE	RESET VALUE	DESCRIPTION
D7-D6	R/W	00	DAC Current Adjustment 00: Default 01: 50% increase in DAC reference current 10: Reserved 11: 100% increase in DAC reference current
D5-D0	R/W	000000	Reserved. Write only zero to these register bits.

Page 0 / Register 110–127: Reserved Registers

BIT	READ/ WRITE	RESET VALUE	DESCRIPTION
D7-D0	R	00000000	Reserved. Do not write to these registers.

Page 1 / Register 0: Page Select Register

BIT	READ/ WRITE	RESET VALUE	DESCRIPTION
D7-D1	X	0000000	Reserved, write only zeros to these register bits
D0	R/W	0	Page Select Bit Writing zero to this bit sets Page-0 as the active page for following register accesses. Writing a one to this bit sets Page-1 as the active page for following register accesses. It is recommended that the user read this register bit back after each write, to ensure that the proper page is being accessed for future register read/writes. This register has the same functionality on page-0 and page-1.

Copyright © 2008–2009, Texas Instruments Incorporated

查询"TLV320AIC3107"供应商

Page 1 / Register 1: Left Channel Audio Effects Filter N0 Coefficient MSB Register(1)

BIT	READ/ WRITE	RESET VALUE	DESCRIPTION
D7-D0	R/W	01101011	Left Channel Audio Effects Filter N0 Coefficient MSB The 16-bit integer contained in the MSB and LSB registers for this coefficient are interpreted as a 2's complement integer, with possible values ranging from –32768 to +32767.

(1) When programming any coefficient value in Page 1, the MSB register should always be written first, immediately followed by the LSB register. Even if only the MSB or LSB of the coefficient changes, both registers should be written in this sequence.

Page 1 / Register 2: Left Channel Audio Effects Filter N0 Coefficient LSB Register

BIT	READ/ WRITE	RESET VALUE	DESCRIPTION
D7-D0	R/W	11100011	Left Channel Audio Effects Filter N0 Coefficient LSB The 16-bit integer contained in the MSB and LSB registers for this coefficient are interpreted as a 2's complement integer, with possible values ranging from –32768 to +32767.

Page 1 / Register 3: Left Channel Audio Effects Filter N1 Coefficient MSB Register

BIT	READ/ WRITE	RESET VALUE	DESCRIPTION
D7-D0	R/W	10010110	Left Channel Audio Effects Filter N1 Coefficient MSB The 16-bit integer contained in the MSB and LSB registers for this coefficient are interpreted as a 2's complement integer, with possible values ranging from –32768 to +32767.

Page 1 / Register 4: Left Channel Audio Effects Filter N1 Coefficient LSB Register

BIT	READ/ WRITE	RESET VALUE	DESCRIPTION
D7-D0	R/W	01100110	Left Channel Audio Effects Filter N1 Coefficient LSB The 16-bit integer contained in the MSB and LSB registers for this coefficient are interpreted as a 2's complement integer, with possible values ranging from –32768 to +32767.

Page 1 / Register 5: Left Channel Audio Effects Filter N2 Coefficient MSB Register

BIT	READ/ WRITE	RESET VALUE	DESCRIPTION
D7-D0	R/W	01100111	Left Channel Audio Effects Filter N2 Coefficient MSB The 16-bit integer contained in the MSB and LSB registers for this coefficient are interpreted as a 2's complement integer, with possible values ranging from –32768 to +32767.

Page 1 / Register 6: Left Channel Audio Effects Filter N2 Coefficient LSB

BIT	READ/ WRITE	RESET VALUE	DESCRIPTION
D7-D0	R/W	01011101	Left Channel Audio Effects Filter N2 Coefficient LSB The 16-bit integer contained in the MSB and LSB registers for this coefficient are interpreted as a 2's complement integer, with possible values ranging from –32768 to +32767.

Page 1 / Register 7: Left Channel Audio Effects Filter N3 Coefficient MSB Register

BIT	READ/ WRITE	RESET VALUE	DESCRIPTION
D7-D0	R/W	01101011	Left Channel Audio Effects Filter N3 Coefficient MSB The 16-bit integer contained in the MSB and LSB registers for this coefficient are interpreted as a 2's complement integer, with possible values ranging from –32768 to +32767.

Copyright © 2008–2009, Texas Instruments Incorporated

查询"TLV320AIC3107"供应商

Page 1 / Register 8: Left Channel Audio Effects Filter N3 Coefficient LSB Register

BIT	READ/ WRITE	RESET VALUE	DESCRIPTION
D7-D0	R/W	11100011	Left Channel Audio Effects Filter N3 Coefficient LSB The 16-bit integer contained in the MSB and LSB registers for this coefficient are interpreted as a 2's complement integer, with possible values ranging from –32768 to +32767.

Page 1 / Register 9: Left Channel Audio Effects Filter N4 Coefficient MSB Register

BIT	READ/ WRITE	RESET VALUE	DESCRIPTION
D7-D0	R/W	10010110	Left Channel Audio Effects Filter N4 Coefficient MSB The 16-bit integer contained in the MSB and LSB registers for this coefficient are interpreted as a 2's complement integer, with possible values ranging from –32768 to +32767.

Page 1 / Register 10: Left Channel Audio Effects Filter N4 Coefficient LSB Register

BIT	READ/ WRITE	RESET VALUE	DESCRIPTION
D7-D0	R/W	01100110	Left Channel Audio Effects Filter N4 Coefficient LSB The 16-bit integer contained in the MSB and LSB registers for this coefficient are interpreted as a 2's complement integer, with possible values ranging from –32768 to +32767.

Page 1 / Register 11: Left Channel Audio Effects Filter N5 Coefficient MSB Register

BIT	READ/ WRITE	RESET VALUE	DESCRIPTION
D7-D0	R/W	01100111	Left Channel Audio Effects Filter N5 Coefficient MSB The 16-bit integer contained in the MSB and LSB registers for this coefficient are interpreted as a 2's complement integer, with possible values ranging from –32768 to +32767.

Page 1 / Register 12: Left Channel Audio Effects Filter N5 Coefficient LSB Register

BIT	READ/ WRITE	RESET VALUE	DESCRIPTION
D7-D0	R/W	01011101	D7-D0 R/W 00000000 Left Channel Audio Effects Filter N5 Coefficient LSB The 16-bit integer contained in the MSB and LSB registers for this coefficient are interpreted as a 2's complement integer, with possible values ranging from -32768 to +32767.

Page 1 / Register 13: Left Channel Audio Effects Filter D1 Coefficient MSB Register

BIT	READ/ WRITE	RESET VALUE	DESCRIPTION
D7-D0	R/W	01111101	Left Channel Audio Effects Filter D1 Coefficient MSB The 16-bit integer contained in the MSB and LSB registers for this coefficient are interpreted as a 2's complement integer, with possible values ranging from –32768 to +32767.

Page 1 / Register 14: Left Channel Audio Effects Filter D1 Coefficient LSB Register

BIT	READ/ WRITE	RESET VALUE	DESCRIPTION
D7-D0	R/W	10000011	Left Channel Audio Effects Filter D1 Coefficient LSB The 16-bit integer contained in the MSB and LSB registers for this coefficient are interpreted as a 2's complement integer, with possible values ranging from –32768 to +32767.

Page 1 / Register 15: Left Channel Audio Effects Filter D2 Coefficient MSB Register

BIT	READ/ WRITE	RESET VALUE	DESCRIPTION
D7-D0	R/W	10000100	Left Channel Audio Effects Filter D2 Coefficient MSB The 16-bit integer contained in the MSB and LSB registers for this coefficient are interpreted as a 2's complement integer, with possible values ranging from –32768 to +32767.

Copyright © 2008–2009, Texas Instruments Incorporated

查询"TLV320AIC3107"供应商

Page 1 / Register 16: Left Channel Audio Effects Filter D2 Coefficient LSB Register

BIT	READ/ WRITE	RESET VALUE	DESCRIPTION
D7-D0	R/W	11101110	Left Channel Audio Effects Filter D2 Coefficient LSB The 16-bit integer contained in the MSB and LSB registers for this coefficient are interpreted as a 2's complement integer, with possible values ranging from –32768 to +32767.

Page 1 / Register 17: Left Channel Audio Effects Filter D4 Coefficient MSB Register

BIT	READ/ WRITE	RESET VALUE	DESCRIPTION
D7-D0	R/W	01111101	Left Channel Audio Effects Filter D4 Coefficient MSB The 16-bit integer contained in the MSB and LSB registers for this coefficient are interpreted as a 2's complement integer, with possible values ranging from –32768 to +32767.

Page 1 / Register 18: Left Channel Audio Effects Filter D4 Coefficient LSB Register

BIT	READ/ WRITE	RESET VALUE	DESCRIPTION
D7-D0	R/W	10000011	Left Channel Audio Effects Filter D4 Coefficient LSB The 16-bit integer contained in the MSB and LSB registers for this coefficient are interpreted as a 2's complement integer, with possible values ranging from –32768 to +32767.

Page 1 / Register 19: Left Channel Audio Effects Filter D5 Coefficient MSB Register

BIT	READ/ WRITE	RESET VALUE	DESCRIPTION
D7-D0	R/W	10000100	Left Channel Audio Effects Filter D5 Coefficient MSB The 16-bit integer contained in the MSB and LSB registers for this coefficient are interpreted as a 2's complement integer, with possible values ranging from –32768 to +32767.

Page 1 / Register 20: Left Channel Audio Effects Filter D5 Coefficient LSB Register

BIT	READ/ WRITE	RESET VALUE	DESCRIPTION
D7-D0	R/W	11101110	Left Channel Audio Effects Filter D5 Coefficient LSB The 16-bit integer contained in the MSB and LSB registers for this coefficient are interpreted as a 2's complement integer, with possible values ranging from –32768 to +32767.

Page 1 / Register 21: Left Channel De-emphasis Filter N0 Coefficient MSB Register

BIT	READ/ WRITE	RESET VALUE	DESCRIPTION
D7-D0	R/W	00111001	Left Channel De-emphasis Filter N0 Coefficient MSB The 16-bit integer contained in the MSB and LSB registers for this coefficient are interpreted as a 2's complement integer, with possible values ranging from –32768 to +32767.

Page 1 / Register 22: Left Channel De-emphasis Filter N0 Coefficient LSB Register

BIT	READ/ WRITE	RESET VALUE	DESCRIPTION
D7-D0	R/W	01010101	Left Channel De-emphasis Filter N0 Coefficient LSB The 16-bit integer contained in the MSB and LSB registers for this coefficient are interpreted as a 2's complement integer, with possible values ranging from –32768 to +32767.

Page 1 / Register 23: Left Channel De-emphasis Filter N1 Coefficient MSB Register

BIT	READ/ WRITE	RESET VALUE	DESCRIPTION
D7-D0	R/W	11110011	Left Channel De-emphasis Filter N1 Coefficient MSB The 16-bit integer contained in the MSB and LSB registers for this coefficient are interpreted as a 2's complement integer, with possible values ranging from –32768 to +32767.

 Copyright © 2008–2009, Texas Instruments Incorporated

查询"TLV320AIC3107"供应商

Page 1 / Register 24: Left Channel De-emphasis Filter N1 Coefficient LSB Register

BIT	READ/ WRITE	RESET VALUE	DESCRIPTION
D7-D0	R/W	00101101	Left Channel De-emphasis Filter N1 Coefficient LSB The 16-bit integer contained in the MSB and LSB registers for this coefficient are interpreted as a 2's complement integer, with possible values ranging from –32768 to +32767.

Page 1 / Register 25: Left Channel De-emphasis Filter D1 Coefficient MSB Register

BIT	READ/ WRITE	RESET VALUE	DESCRIPTION
D7-D0	R/W	01010011	Left Channel De-emphasis Filter D1 Coefficient MSB The 16-bit integer contained in the MSB and LSB registers for this coefficient are interpreted as a 2's complement integer, with possible values ranging from –32768 to +32767.

Page 1 / Register 26: Left Channel De-emphasis Filter D1 Coefficient LSB Register

BIT	READ/ WRITE	RESET VALUE	DESCRIPTION
D7-D0	R/W	01111110	Left Channel De-emphasis Filter D1 Coefficient LSB The 16-bit integer contained in the MSB and LSB registers for this coefficient are interpreted as a 2's complement integer, with possible values ranging from –32768 to +32767.

Page 1 / Register 27: Right Channel Audio Effects Filter N0 Coefficient MSB Register

BIT	READ/ WRITE	RESET VALUE	DESCRIPTION
D7-D0	R/W	01101011	Right Channel Audio Effects Filter N0 Coefficient MSB The 16-bit integer contained in the MSB and LSB registers for this coefficient are interpreted as a 2's complement integer, with possible values ranging from –32768 to +32767.

Page 1 / Register 28: Right Channel Audio Effects Filter N0 Coefficient LSB Register

BIT	READ/ WRITE	RESET VALUE	DESCRIPTION
D7-D0	R/W	11100011	Right Channel Audio Effects Filter N0 Coefficient LSB The 16-bit integer contained in the MSB and LSB registers for this coefficient are interpreted as a 2's complement integer, with possible values ranging from –32768 to +32767.

Page 1 / Register 29: Right Channel Audio Effects Filter N1 Coefficient MSB Register

BIT	READ/ WRITE	RESET VALUE	DESCRIPTION
D7-D0	R/W	10010110	Right Channel Audio Effects Filter N1 Coefficient MSB The 16-bit integer contained in the MSB and LSB registers for this coefficient are interpreted as a 2's complement integer, with possible values ranging from –32768 to +32767.

Page 1 / Register 30: Right Channel Audio Effects Filter N1 Coefficient LSB Register

BIT	READ/ WRITE	RESET VALUE	DESCRIPTION
D7-D0	R/W	01100110	Right Channel Audio Effects Filter N1 Coefficient LSB The 16-bit integer contained in the MSB and LSB registers for this coefficient are interpreted as a 2's complement integer, with possible values ranging from –32768 to +32767.

Page 1 / Register 31: Right Channel Audio Effects Filter N2 Coefficient MSB Register

BIT	READ/ WRITE	RESET VALUE	DESCRIPTION
D7-D0	R/W	01100111	Right Channel Audio Effects Filter N2 Coefficient MSB The 16-bit integer contained in the MSB and LSB registers for this coefficient are interpreted as a 2's complement integer, with possible values ranging from –32768 to +32767.

Copyright © 2008–2009, Texas Instruments Incorporated

查询"TLV320AIC3107"供应商

Page 1 / Register 32: Right Channel Audio Effects Filter N2 Coefficient LSB Register

BIT	READ/ WRITE	RESET VALUE	DESCRIPTION
D7-D0	R/W	01011101	Right Channel Audio Effects Filter N2 Coefficient LSB The 16-bit integer contained in the MSB and LSB registers for this coefficient are interpreted as a 2's complement integer, with possible values ranging from –32768 to +32767.

Page 1 / Register 33: Right Channel Audio Effects Filter N3 Coefficient MSB Register

BIT	READ/ WRITE	RESET VALUE	DESCRIPTION
D7-D0	R/W	01101011	Right Channel Audio Effects Filter N3 Coefficient MSB The 16-bit integer contained in the MSB and LSB registers for this coefficient are interpreted as a 2's complement integer, with possible values ranging from –32768 to +32767.

Page 1 / Register 34: Right Channel Audio Effects Filter N3 Coefficient LSB Register

BIT	READ/ WRITE	RESET VALUE	DESCRIPTION
D7-D0	R/W	11100011	Right Channel Audio Effects Filter N3 Coefficient LSB The 16-bit integer contained in the MSB and LSB registers for this coefficient are interpreted as a 2's complement integer, with possible values ranging from –32768 to +32767.

Page 1 / Register 35: Right Channel Audio Effects Filter N4 Coefficient MSB Register

BIT	READ/ WRITE	RESET VALUE	DESCRIPTION
D7-D0	R/W	10010110	Right Channel Audio Effects Filter N4 Coefficient MSB The 16-bit integer contained in the MSB and LSB registers for this coefficient are interpreted as a 2's complement integer, with possible values ranging from –32768 to +32767.

Page 1 / Register 36: Right Channel Audio Effects Filter N4 Coefficient LSB Register

BIT	READ/ WRITE	RESET VALUE	DESCRIPTION
D7-D0	R/W	01100110	Right Channel Audio Effects Filter N4 Coefficient LSB The 16-bit integer contained in the MSB and LSB registers for this coefficient are interpreted as a 2's complement integer, with possible values ranging from –32768 to +32767.

Page 1 / Register 37: Right Channel Audio Effects Filter N5 Coefficient MSB Register

BIT	READ/ WRITE	RESET VALUE	DESCRIPTION
D7-D0	R/W	01100111	Right Channel Audio Effects Filter N5 Coefficient MSB The 16-bit integer contained in the MSB and LSB registers for this coefficient are interpreted as a 2's complement integer, with possible values ranging from –32768 to +32767.

Page 1 / Register 38: Right Channel Audio Effects Filter N5 Coefficient LSB Register

BIT	READ/ WRITE	RESET VALUE	DESCRIPTION
D7-D0	R/W	01011101	Right Channel Audio Effects Filter N5 Coefficient LSB The 16-bit integer contained in the MSB and LSB registers for this coefficient are interpreted as a 2's complement integer, with possible values ranging from –32768 to +32767.

Page 1 / Register 39: Right Channel Audio Effects Filter D1 Coefficient MSB Register

BIT	READ/ WRITE	RESET VALUE	DESCRIPTION
D7-D0	R/W	01111101	Right Channel Audio Effects Filter D1 Coefficient MSB The 16-bit integer contained in the MSB and LSB registers for this coefficient are interpreted as a 2's complement integer, with possible values ranging from –32768 to +32767.

Copyright © 2008–2009, Texas Instruments Incorporated

查询"TLV320AIC3107"供应商

Page 1 / Register 40: Right Channel Audio Effects Filter D1 Coefficient LSB Register

BIT	READ/ WRITE	RESET VALUE	DESCRIPTION
D7-D0	R/W	10000011	Right Channel Audio Effects Filter D1 Coefficient LSB The 16-bit integer contained in the MSB and LSB registers for this coefficient are interpreted as a 2's complement integer, with possible values ranging from –32768 to +32767.

Page 1 / Register 41: Right Channel Audio Effects Filter D2 Coefficient MSB Register

BIT	READ/ WRITE	RESET VALUE	DESCRIPTION
D7-D0	R/W	10000100	Right Channel Audio Effects Filter D2 Coefficient MSB The 16-bit integer contained in the MSB and LSB registers for this coefficient are interpreted as a 2's complement integer, with possible values ranging from –32768 to +32767.

Page 1 / Register 42: Right Channel Audio Effects Filter D2 Coefficient LSB Register

BIT	READ/ WRITE	RESET VALUE	DESCRIPTION
D7-D0	R/W	11101110	Right Channel Audio Effects Filter D2 Coefficient LSB The 16-bit integer contained in the MSB and LSB registers for this coefficient are interpreted as a 2's complement integer, with possible values ranging from –32768 to +32767.

Page 1 / Register 43: Right Channel Audio Effects Filter D4 Coefficient MSB Register

BIT	READ/ WRITE	RESET VALUE	DESCRIPTION
D7-D0	R/W	01111101	Right Channel Audio Effects Filter D4 Coefficient MSB The 16-bit integer contained in the MSB and LSB registers for this coefficient are interpreted as a 2's complement integer, with possible values ranging from –32768 to +32767.

Page 1 / Register 44: Right Channel Audio Effects Filter D4 Coefficient LSB Register

BIT	READ/ WRITE	RESET VALUE	DESCRIPTION
D7-D0	R/W	10000011	Right Channel Audio Effects Filter D4 Coefficient LSB The 16-bit integer contained in the MSB and LSB registers for this coefficient are interpreted as a 2's complement integer, with possible values ranging from –32768 to +32767.

Page 1 / Register 45: Right Channel Audio Effects Filter D5 Coefficient MSB Register

BIT	READ/ WRITE	RESET VALUE	DESCRIPTION
D7-D0	R/W	10000100	Right Channel Audio Effects Filter D5 Coefficient MSB The 16-bit integer contained in the MSB and LSB registers for this coefficient are interpreted as a 2's complement integer, with possible values ranging from –32768 to +32767.

Page 1 / Register 46: Right Channel Audio Effects Filter D5 Coefficient LSB Register

BIT	READ/ WRITE	RESET VALUE	DESCRIPTION
D7-D0	R/W	11101110	Right Channel Audio Effects Filter D5 Coefficient LSB The 16-bit integer contained in the MSB and LSB registers for this coefficient are interpreted as a 2's complement integer, with possible values ranging from –32768 to +32767.

Page 1 / Register 47: Right Channel De-emphasis Filter N0 Coefficient MSB Register

BIT	READ/ WRITE	RESET VALUE	DESCRIPTION
D7-D0	R/W	00111001	Right Channel De-emphasis Filter N0 Coefficient MSB The 16-bit integer contained in the MSB and LSB registers for this coefficient are interpreted as a 2's complement integer, with possible values ranging from –32768 to +32767.

Copyright © 2008–2009, Texas Instruments Incorporated

查询"TLV320AIC3107"供应商

Page 1 / Register 48: Right Channel De-emphasis Filter N0 Coefficient LSB Register

BIT	READ/ WRITE	RESET VALUE	DESCRIPTION
D7-D0	R/W	01010101	Right Channel De-emphasis Filter N0 Coefficient LSB The 16-bit integer contained in the MSB and LSB registers for this coefficient are interpreted as a 2's complement integer, with possible values ranging from –32768 to +32767.

Page 1 / Register 49: Right Channel De-emphasis Filter N1 Coefficient MSB Register

BIT	READ/ WRITE	RESET VALUE	DESCRIPTION
D7-D0	R/W	11110011	Right Channel De-emphasis Filter N1 Coefficient MSB The 16-bit integer contained in the MSB and LSB registers for this coefficient are interpreted as a 2's complement integer, with possible values ranging from –32768 to +32767.

Page 1 / Register 50: Right Channel De-emphasis Filter N1 Coefficient LSB Register

BIT	READ/ WRITE	RESET VALUE	DESCRIPTION
D7-D0	R/W	00101101	Right Channel De-emphasis Filter N1 Coefficient LSB The 16-bit integer contained in the MSB and LSB registers for this coefficient are interpreted as a 2's complement integer, with possible values ranging from –32768 to +32767.

Page 1 / Register 51: Right Channel De-emphasis Filter D1 Coefficient MSB Register

BIT	READ/ WRITE	RESET VALUE	DESCRIPTION
D7-D0	R/W	01010011	Right Channel De-emphasis Filter D1 Coefficient MSB The 16-bit integer contained in the MSB and LSB registers for this coefficient are interpreted as a 2's complement integer, with possible values ranging from –32768 to +32767.

Page 1 / Register 52: Right Channel De-emphasis Filter D1 Coefficient LSB Register

BIT	READ/ WRITE	RESET VALUE	DESCRIPTION
D7-D0	R/W	01111110	Right Channel De-emphasis Filter D1 Coefficient LSB The 16-bit integer contained in the MSB and LSB registers for this coefficient are interpreted as a 2's complement integer, with possible values ranging from –32768 to +32767.

Page 1 / Register 53: 3-D Attenuation Coefficient MSB Register

BIT	READ/ WRITE	RESET VALUE	DESCRIPTION
D7-D0	R/W	01111111	3-D Attenuation Coefficient MSB The 16-bit integer contained in the MSB and LSB registers for this coefficient are interpreted as a 2's complement integer, with possible values ranging from –32768 to +32767.

Page 1 / Register 54: 3-D Attenuation Coefficient LSB Register

BIT	READ/ WRITE	RESET VALUE	DESCRIPTION
D7-D0	R/W	11111111	3-D Attenuation Coefficient LSB The 16-bit integer contained in the MSB and LSB registers for this coefficient are interpreted as a 2's complement integer, with possible values ranging from –32768 to +32767.

Page 1 / Register 55–64: Reserved Registers

BIT	READ/ WRITE	RESET VALUE	DESCRIPTION
D7-D0	R	00000000	Reserved. Do not write to these registers.

Copyright © 2008–2009, Texas Instruments Incorporated

查询"TLV320AIC3107"供应商

Page 1 / Register 65: Left Channel ADC High Pass Filter N0 Coefficient MSB Register

BIT	READ/ WRITE	RESET VALUE	DESCRIPTION
D7-D0	R/W	00111001	Left Channel ADC High Pass Filter N0 Coefficient MSB The 16-bit integer contained in the MSB and LSB registers for this coefficient are interpreted as a 2's complement integer, with possible values ranging from -32768 to +32767.

Page 1 / Register 66: Left Channel ADC High Pass Filter N0 Coefficient LSB Register

BIT	READ/ WRITE	RESET VALUE	DESCRIPTION
D7-D0	R/W	01010101	Left Channel ADC High Pass Filter N0 Coefficient LSB The 16-bit integer contained in the MSB and LSB registers for this coefficient are interpreted as a 2's complement integer, with possible values ranging from -32768 to +32767.

Page 1 / Register 67: Left Channel ADC High Pass Filter N1 Coefficient MSB Register

BIT	READ/ WRITE	RESET VALUE	DESCRIPTION
D7-D0	R/W	11110011	Left Channel ADC High Pass Filter N1 Coefficient MSB The 16-bit integer contained in the MSB and LSB registers for this coefficient are interpreted as a 2's complement integer, with possible values ranging from -32768 to +32767.

Page 1 / Register 68: Left Channel ADC High Pass Filter N1 Coefficient LSB Register

BIT	READ/ WRITE	RESET VALUE	DESCRIPTION
D7-D0	R/W	00101101	Left Channel ADC High Pass Filter N1 Coefficient LSB The 16-bit integer contained in the MSB and LSB registers for this coefficient are interpreted as a 2's complement integer, with possible values ranging from -32768 to +32767.

Page 1 / Register 69: Left Channel ADC High Pass Filter D1 Coefficient MSB Register

BIT	READ/ WRITE	RESET VALUE	DESCRIPTION
D7-D0	R/W	01010011	Left Channel ADC High Pass Filter D1 Coefficient MSB The 16-bit integer contained in the MSB and LSB registers for this coefficient are interpreted as a 2's complement integer, with possible values ranging from -32768 to +32767.

Page 1 / Register 70: Left Channel ADC High Pass Filter D1 Coefficient LSB Register

BIT	READ/ WRITE	RESET VALUE	DESCRIPTION
D7-D0	R/W	01111110	Left Channel ADC High Pass Filter D1 Coefficient LSB The 16-bit integer contained in the MSB and LSB registers for this coefficient are interpreted as a 2's complement integer, with possible values ranging from -32768 to +32767.

Page 1 / Register 71: Right Channel ADC High Pass Filter N0 Coefficient MSB Register

BIT	READ/ WRITE	RESET VALUE	DESCRIPTION
D7-D0	R/W	00111001	Right Channel ADC High Pass Filter N0 Coefficient MSB The 16-bit integer contained in the MSB and LSB registers for this coefficient are interpreted as a 2's complement integer, with possible values ranging from -32768 to +32767.

Page 1 / Register 72: Right Channel ADC High Pass Filter N0 Coefficient LSB Register

BIT	READ/ WRITE	RESET VALUE	DESCRIPTION
D7-D0	R/W	01010101	Right Channel ADC High Pass Filter N0 Coefficient LSB The 16-bit integer contained in the MSB and LSB registers for this coefficient are interpreted as a 2's complement integer, with possible values ranging from -32768 to +32767.

Copyright © 2008–2009, Texas Instruments Incorporated

查询"TLV320AIC3107"供应商

Page 1 / Register 73: Right Channel ADC High Pass Filter N1 Coefficient MSB Register

BIT	READ/ WRITE	RESET VALUE	DESCRIPTION
D7-D0	R/W	11110011	Right Channel ADC High Pass Filter N1 Coefficient MSB The 16-bit integer contained in the MSB and LSB registers for this coefficient are interpreted as a 2's complement integer, with possible values ranging from -32768 to +32767.

Page 1 / Register 74: Right Channel ADC High Pass Filter N1 Coefficient LSB Register

BIT	READ/ WRITE	RESET VALUE	DESCRIPTION
D7-D0	R/W	00101101	Right Channel ADC High Pass Filter N1 Coefficient LSB The 16-bit integer contained in the MSB and LSB registers for this coefficient are interpreted as a 2's complement integer, with possible values ranging from -32768 to +32767.

Page 1 / Register 75: Right Channel ADC High Pass Filter D1 Coefficient MSB Register

BIT	READ/ WRITE	RESET VALUE	DESCRIPTION
D7-D0	R/W	01010011	Right Channel ADC High Pass Filter D1 Coefficient MSB The 16-bit integer contained in the MSB and LSB registers for this coefficient are interpreted as a 2's complement integer, with possible values ranging from -32768 to +32767.

Page 1 / Register 76: Right Channel ADC High Pass Filter D1 Coefficient LSB Register

BIT	READ/ WRITE	RESET VALUE	DESCRIPTION
D7-D0	R/W	01111110	Right Channel ADC High Pass Filter D1 Coefficient LSB The 16-bit integer contained in the MSB and LSB registers for this coefficient are interpreted as a 2's complement integer, with possible values ranging from -32768 to +32767.

Page 1 / Register 77-127: Reserved Registers

BIT	READ/ WRITE	RESET VALUE	DESCRIPTION
D7-D0	R	00000000	Reserved. Do not write to these registers.

PACKAGE INFORMATION

Package Dimensions

The package dimensions for this YZF package are shown in the table below. See the package drawing at the end of this data sheet for more details.

YZF Package Dimensions

Packaged Devices	D	E
TLV320AIC3107YZF	Min = 3503µm Max = 3563µm	Min = 3316µm Max = 3376µm

Copyright © 2008–2009, Texas Instruments Incorporated

TLV320AIC3107IRSB Functional B

查询"TLV320AIC3107"供应商

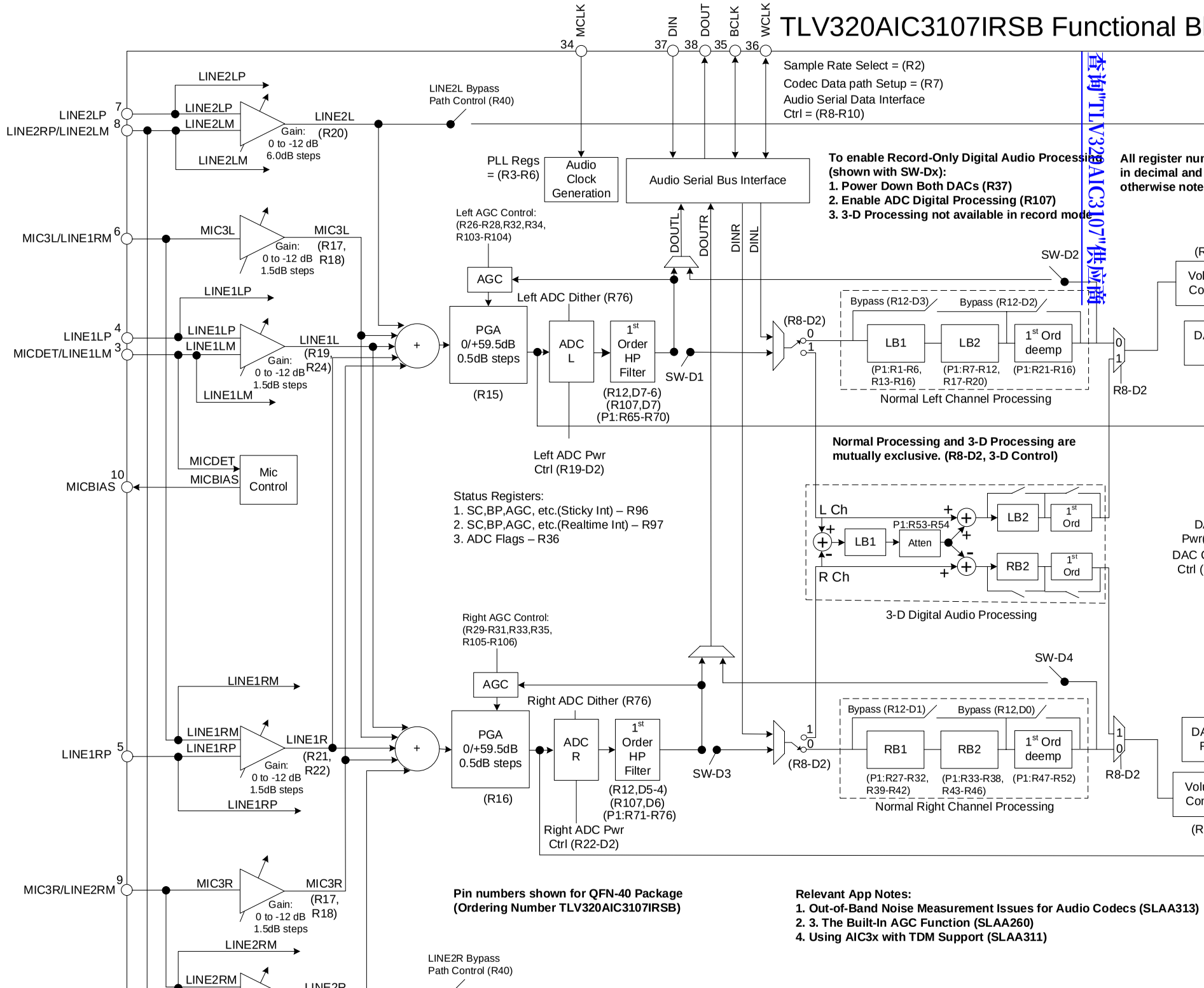

查询"TLV320AIC3107"供应商

PACKAGING INFORMATION

Orderable Device	Status [1]	Package Type	Package Drawing	Pins	Package Qty	Eco Plan [2]	Lead/Ball Finish	MSL Peak Temp [3]
TLV320AIC3107IRSBR	ACTIVE	WQFN	RSB	40	3000	Green (RoHS & no Sb/Br)	CU NIPDAU	Level-2-260C-1 YEAR
TLV320AIC3107IRSBT	ACTIVE	WQFN	RSB	40	250	Green (RoHS & no Sb/Br)	CU NIPDAU	Level-2-260C-1 YEAR
TLV320AIC3107IYZFR	ACTIVE	DSBGA	YZF	42	3000	Green (RoHS & no Sb/Br)	SNAGCU	Level-1-260C-UNLIM
TLV320AIC3107IYZFT	ACTIVE	DSBGA	YZF	42	250	Green (RoHS & no Sb/Br)	SNAGCU	Level-1-260C-UNLIM

[1] The marketing status values are defined as follows:
ACTIVE: Product device recommended for new designs.
LIFEBUY: TI has announced that the device will be discontinued, and a lifetime-buy period is in effect.
NRND: Not recommended for new designs. Device is in production to support existing customers, but TI does not recommend using this part in a new design.
PREVIEW: Device has been announced but is not in production. Samples may or may not be available.
OBSOLETE: TI has discontinued the production of the device.

[2] Eco Plan - The planned eco-friendly classification: Pb-Free (RoHS), Pb-Free (RoHS Exempt), or Green (RoHS & no Sb/Br) - please check http://www.ti.com/productcontent for the latest availability information and additional product content details.
TBD: The Pb-Free/Green conversion plan has not been defined.
Pb-Free (RoHS): TI's terms "Lead-Free" or "Pb-Free" mean semiconductor products that are compatible with the current RoHS requirements for all 6 substances, including the requirement that lead not exceed 0.1% by weight in homogeneous materials. Where designed to be soldered at high temperatures, TI Pb-Free products are suitable for use in specified lead-free processes.
Pb-Free (RoHS Exempt): This component has a RoHS exemption for either 1) lead-based flip-chip solder bumps used between the die and package, or 2) lead-based die adhesive used between the die and leadframe. The component is otherwise considered Pb-Free (RoHS compatible) as defined above.
Green (RoHS & no Sb/Br): TI defines "Green" to mean Pb-Free (RoHS compatible), and free of Bromine (Br) and Antimony (Sb) based flame retardants (Br or Sb do not exceed 0.1% by weight in homogeneous material)

[3] MSL, Peak Temp. -- The Moisture Sensitivity Level rating according to the JEDEC industry standard classifications, and peak solder temperature.

Important Information and Disclaimer: The information provided on this page represents TI's knowledge and belief as of the date that it is provided. TI bases its knowledge and belief on information provided by third parties, and makes no representation or warranty as to the accuracy of such information. Efforts are underway to better integrate information from third parties. TI has taken and continues to take reasonable steps to provide representative and accurate information but may not have conducted destructive testing or chemical analysis on incoming materials and chemicals. TI and TI suppliers consider certain information to be proprietary, and thus CAS numbers and other limited information may not be available for release.

In no event shall TI's liability arising out of such information exceed the total purchase price of the TI part(s) at issue in this document sold by TI to Customer on an annual basis.

查询"TLV320AIC3107"供应商

TAPE AND REEL INFORMATION

REEL DIMENSIONS

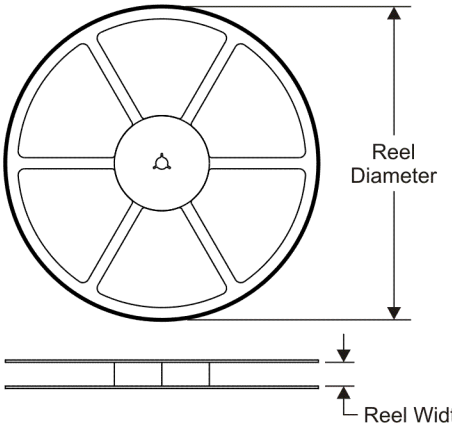

TAPE DIMENSIONS

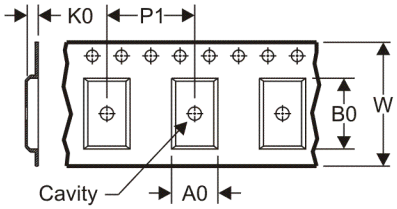

A0	Dimension designed to accommodate the component width
B0	Dimension designed to accommodate the component length
K0	Dimension designed to accommodate the component thickness
W	Overall width of the carrier tape
P1	Pitch between successive cavity centers

QUADRANT ASSIGNMENTS FOR PIN 1 ORIENTATION IN TAPE

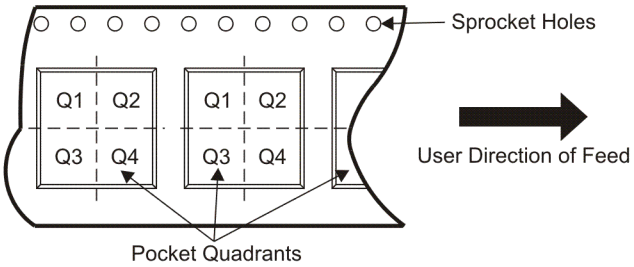

*All dimensions are nominal

Device	Package Type	Package Drawing	Pins	SPQ	Reel Diameter (mm)	Reel Width W1 (mm)	A0 (mm)	B0 (mm)	K0 (mm)	P1 (mm)	W (mm)	Pin1 Quadrant
TLV320AIC3107IRSBR	WQFN	RSB	40	3000	330.0	12.4	5.3	5.3	1.5	8.0	12.0	Q2
TLV320AIC3107IRSBT	WQFN	RSB	40	250	180.0	12.4	5.3	5.3	1.5	8.0	12.0	Q2

查询"TLV320AIC3107"供应商

TAPE AND REEL BOX DIMENSIONS

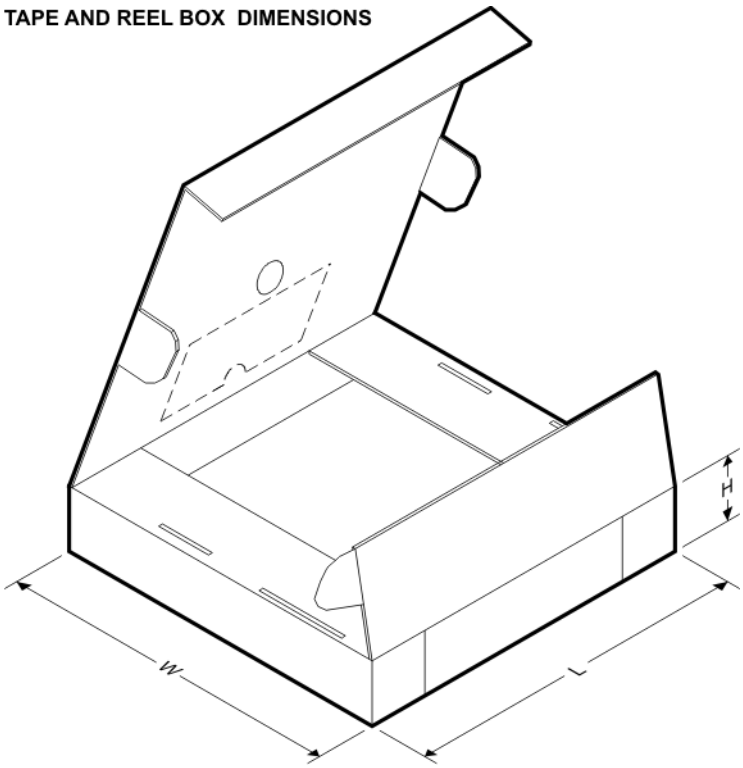

*All dimensions are nominal

Device	Package Type	Package Drawing	Pins	SPQ	Length (mm)	Width (mm)	Height (mm)
TLV320AIC3107IRSBR	WQFN	RSB	40	3000	346.0	346.0	29.0
TLV320AIC3107IRSBT	WQFN	RSB	40	250	190.5	212.7	31.8

查询"TLV320AIC3107"供应商

RSB (S-PWQFN-N40) PLASTIC QUAD FLATPACK NO-LEAD

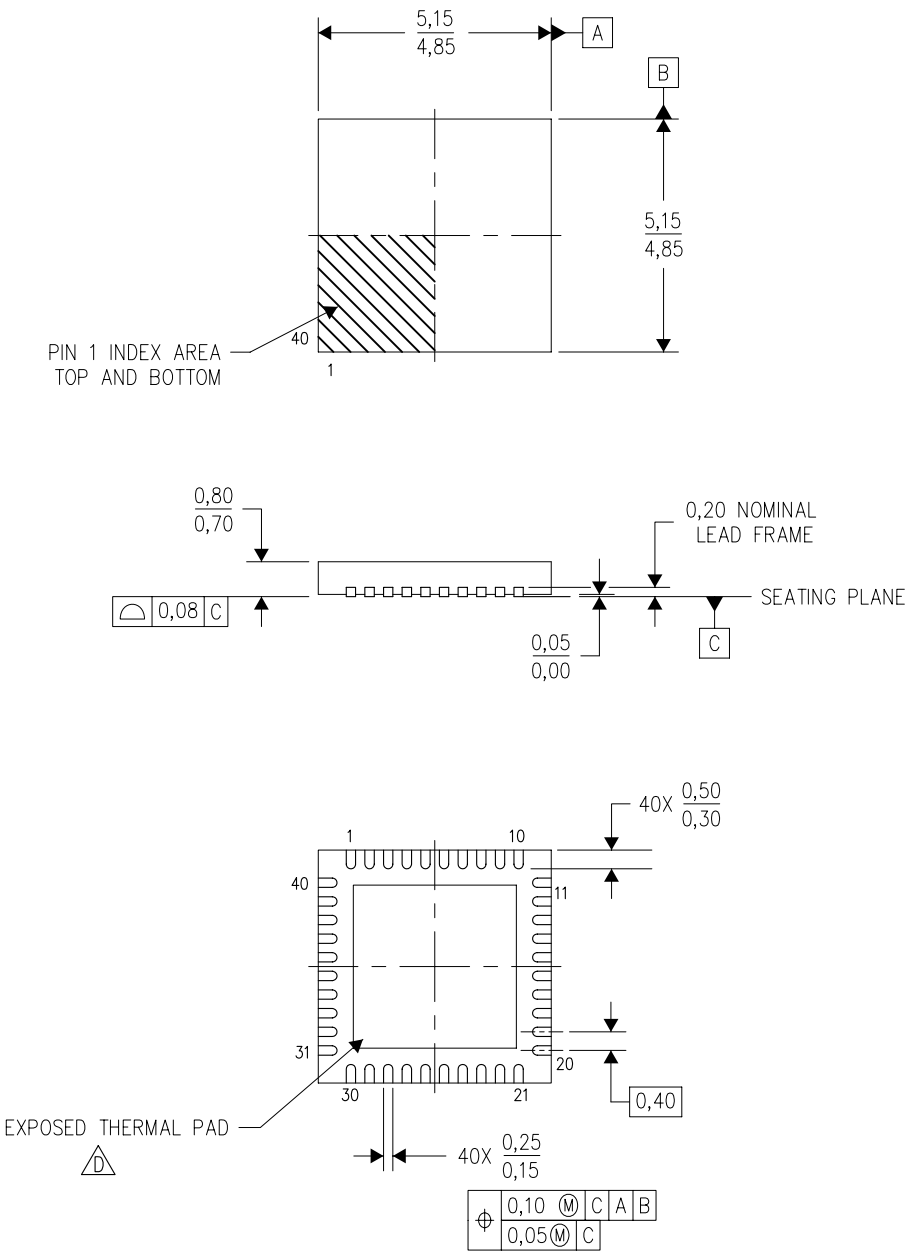

4207182/B 08/10

NOTES:
A. All linear dimensions are in millimeters. Dimensioning and tolerancing per ASME Y14.5M-1994.
B. This drawing is subject to change without notice.
C. QFN (Quad Flatpack No-Lead) Package configuration.
D. The package thermal pad must be soldered to the board for thermal and mechanical performance. See the Product Data Sheet for details regarding the exposed thermal pad dimensions.

查询"TLV320AIC3107"供应商

RSB (S-PWQFN-N40) PLASTIC QUAD FLATPACK NO-LEAD

THERMAL INFORMATION

This package incorporates an exposed thermal pad that is designed to be attached directly to an external heatsink. The thermal pad must be soldered directly to the printed circuit board (PCB). After soldering, the PCB can be used as a heatsink. In addition, through the use of thermal vias, the thermal pad can be attached directly to the appropriate copper plane shown in the electrical schematic for the device, or alternatively, can be attached to a special heatsink structure designed into the PCB. This design optimizes the heat transfer from the integrated circuit (IC).

For information on the Quad Flatpack No-Lead (QFN) package and its advantages, refer to Application Report, QFN/SON PCB Attachment, Texas Instruments Literature No. SLUA271. This document is available at www.ti.com.

The exposed thermal pad dimensions for this package are shown in the following illustration.

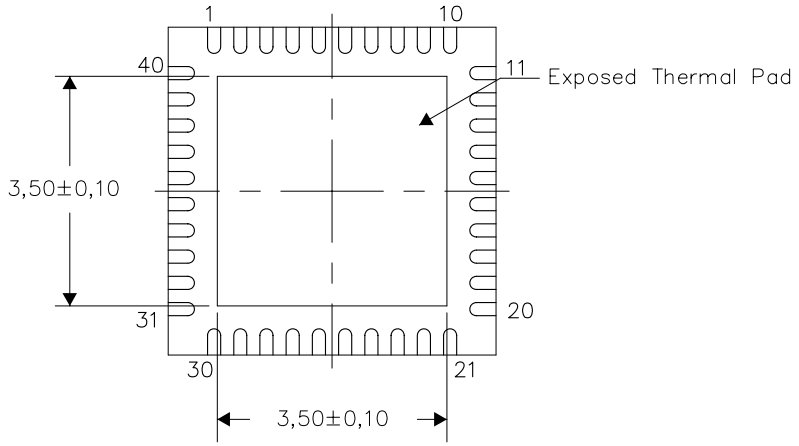

Bottom View

Exposed Thermal Pad Dimensions

4207183-2/H 11/10

NOTE: A. All linear dimensions are in millimeters

查询"TLV320AIC3107"供应商

RSB (S-PWQFN-N40) PLASTIC QUAD FLATPACK NO-LEAD

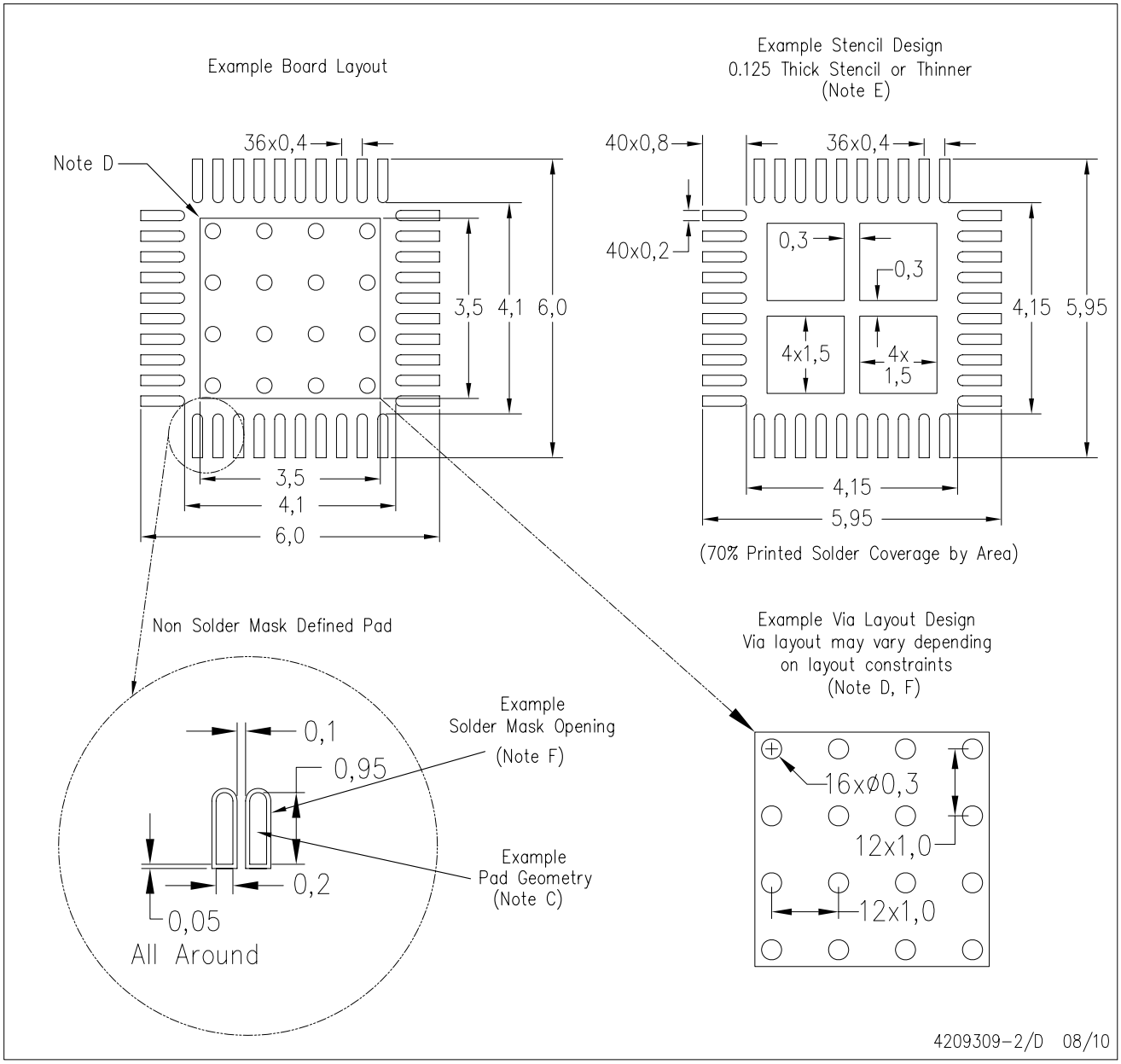

NOTES:
A. All linear dimensions are in millimeters.
B. This drawing is subject to change without notice.
C. Publication IPC-7351 is recommended for alternate designs.
D. This package is designed to be soldered to a thermal pad on the board. Refer to Application Note, Quad Flat-Pack Packages, Texas Instruments Literature No. SLUA271, and also the Product Data Sheets for specific thermal information, via requirements, and recommended board layout. These documents are available at www.ti.com <http://www.ti.com>.
E. Laser cutting apertures with trapezoidal walls and also rounding corners will offer better paste release. Customers should contact their board assembly site for stencil design recommendations. Refer to IPC 7525 for stencil design considerations.
F. Customers should contact their board fabrication site for recommended solder mask tolerances and via tenting recommendations for vias placed in the thermal pad.

查询"TLV320AIC3107"供应商

YZF (R-XBGA-N42) DIE-SIZE BALL GRID ARRAY

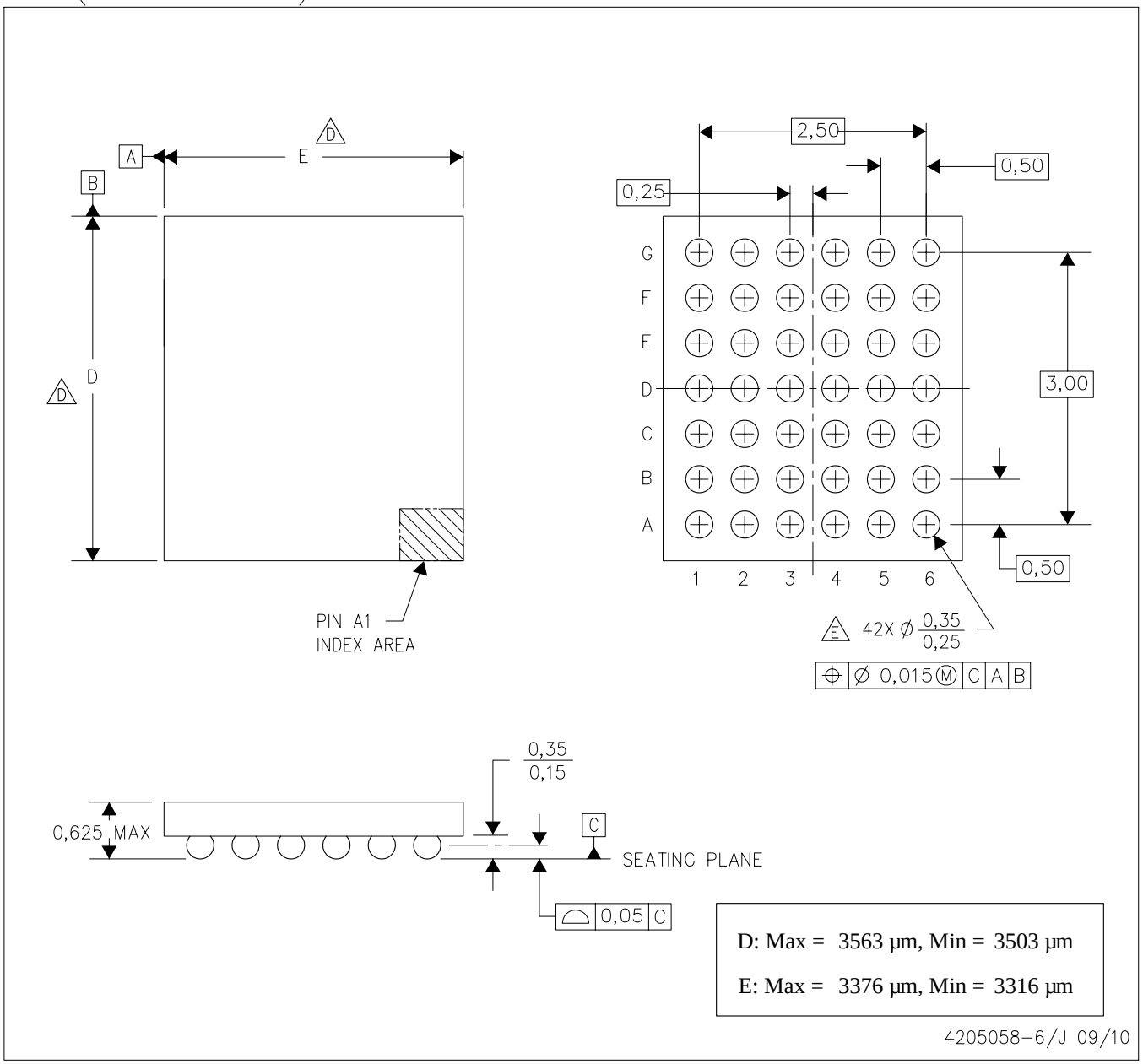

NOTES:
- A. All linear dimensions are in millimeters. Dimensioning and tolerancing per ASME Y14.5M-1994.
- B. This drawing is subject to change without notice.
- C. NanoFree™ package configuration.
- D. The package size (Dimension D and E) of a particular device is specified in the device Product Data Sheet version of this drawing, in case it cannot be found in the product datasheet please contact a local TI representative. A range of possible values per each package desginator can be found at http://www.ti.com/sc/docs/psheets/type/dsbga.html
- E. Reference Product Data Sheet for array population. 6 x 7 matrix pattern is shown for illustration only.
- F. This package contains Pb-free balls.

NanoFree is a trademark of Texas Instruments.

查询"TLV320AIC3107"供应商

IMPORTANT NOTICE

Texas Instruments Incorporated and its subsidiaries (TI) reserve the right to make corrections, modifications, enhancements, improvements, and other changes to its products and services at any time and to discontinue any product or service without notice. Customers should obtain the latest relevant information before placing orders and should verify that such information is current and complete. All products are sold subject to TI's terms and conditions of sale supplied at the time of order acknowledgment.

TI warrants performance of its hardware products to the specifications applicable at the time of sale in accordance with TI's standard warranty. Testing and other quality control techniques are used to the extent TI deems necessary to support this warranty. Except where mandated by government requirements, testing of all parameters of each product is not necessarily performed.

TI assumes no liability for applications assistance or customer product design. Customers are responsible for their products and applications using TI components. To minimize the risks associated with customer products and applications, customers should provide adequate design and operating safeguards.

TI does not warrant or represent that any license, either express or implied, is granted under any TI patent right, copyright, mask work right, or other TI intellectual property right relating to any combination, machine, or process in which TI products or services are used. Information published by TI regarding third-party products or services does not constitute a license from TI to use such products or services or a warranty or endorsement thereof. Use of such information may require a license from a third party under the patents or other intellectual property of the third party, or a license from TI under the patents or other intellectual property of TI.

Reproduction of TI information in TI data books or data sheets is permissible only if reproduction is without alteration and is accompanied by all associated warranties, conditions, limitations, and notices. Reproduction of this information with alteration is an unfair and deceptive business practice. TI is not responsible or liable for such altered documentation. Information of third parties may be subject to additional restrictions.

Resale of TI products or services with statements different from or beyond the parameters stated by TI for that product or service voids all express and any implied warranties for the associated TI product or service and is an unfair and deceptive business practice. TI is not responsible or liable for any such statements.

TI products are not authorized for use in safety-critical applications (such as life support) where a failure of the TI product would reasonably be expected to cause severe personal injury or death, unless officers of the parties have executed an agreement specifically governing such use. Buyers represent that they have all necessary expertise in the safety and regulatory ramifications of their applications, and acknowledge and agree that they are solely responsible for all legal, regulatory and safety-related requirements concerning their products and any use of TI products in such safety-critical applications, notwithstanding any applications-related information or support that may be provided by TI. Further, Buyers must fully indemnify TI and its representatives against any damages arising out of the use of TI products in such safety-critical applications.

TI products are neither designed nor intended for use in military/aerospace applications or environments unless the TI products are specifically designated by TI as military-grade or "enhanced plastic." Only products designated by TI as military-grade meet military specifications. Buyers acknowledge and agree that any such use of TI products which TI has not designated as military-grade is solely at the Buyer's risk, and that they are solely responsible for compliance with all legal and regulatory requirements in connection with such use.

TI products are neither designed nor intended for use in automotive applications or environments unless the specific TI products are designated by TI as compliant with ISO/TS 16949 requirements. Buyers acknowledge and agree that, if they use any non-designated products in automotive applications, TI will not be responsible for any failure to meet such requirements.

Following are URLs where you can obtain information on other Texas Instruments products and application solutions:

Products		**Applications**	
Amplifiers	amplifier.ti.com	Audio	www.ti.com/audio
Data Converters	dataconverter.ti.com	Automotive	www.ti.com/automotive
DLP® Products	www.dlp.com	Communications and Telecom	www.ti.com/communications
DSP	dsp.ti.com	Computers and Peripherals	www.ti.com/computers
Clocks and Timers	www.ti.com/clocks	Consumer Electronics	www.ti.com/consumer-apps
Interface	interface.ti.com	Energy	www.ti.com/energy
Logic	logic.ti.com	Industrial	www.ti.com/industrial
Power Mgmt	power.ti.com	Medical	www.ti.com/medical
Microcontrollers	microcontroller.ti.com	Security	www.ti.com/security
RFID	www.ti-rfid.com	Space, Avionics & Defense	www.ti.com/space-avionics-defense
RF/IF and ZigBee® Solutions	www.ti.com/lprf	Video and Imaging	www.ti.com/video
		Wireless	www.ti.com/wireless-apps

Mailing Address: Texas Instruments, Post Office Box 655303, Dallas, Texas 75265
Copyright © 2010, Texas Instruments Incorporated