TELUX™

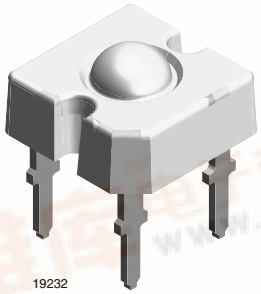

FEATURES

- High luminous flux
- Supreme heat dissipation: R_{thJP} = 90 K/W
- High operating temperature: T_{amb} = - 40 °C to + 110 °C
- Packed in tubes for automatic insertion
- Luminous flux, forward voltage and color categorized for each tube
- Small mechanical tolerances allow precise usage of external reflectors or light guides
- Lead (Pb)-free device - RoHS compliant
- ESD-withstand voltage: up to 1 kV accordance to JESD22-A114-B
- Compliant to RoHS directive 2002/95/EC and in accordance to WEEE 2002/96/EC
- AEC-Q101 qualified
- Compatible with wave solder processes according to CECC 00802 and J-STD-020
- Find out more about Vishay's Automotive Grade Product requirements at: www.vishay.com/applications

AUTOMOTIVE GRADE
Pb-free
e3
RoHS COMPLIANT
GREEN (5-2008)**

DESCRIPTION

The VLWTG9600 is a clear, non diffused LED for applications where high luminous flux is required.

It is designed in an industry standard 7.62 mm square package utilizing highly developed InGaN technology.

The supreme heat dissipation of VLWTG9600 allows applications at high ambient temperatures.

All packing units are binned for luminous flux, forward voltage and color to achieve the most homogenous light appearance in application.

APPLICATIONS

- Exterior lighting
- Replacement of small incandescent lamps
- Traffic signals and signs

PRODUCT GROUP AND PACKAGE DATA

- Product group: LED
- Package: TELUX
- Product series: power
- Angle of half intensity: ± 30°

PARTS TABLE

PART	COLOR, LUMINOUS FLUX	TECHNOLOGY
VLWTG9600	True green, ϕ_V = 2500 mlm (typ.)	InGaN on SiC

** Please see document "Vishay Material Category Policy": www.vishay.com/doc?99902

ABSOLUTE MAXIMUM RATINGS (T_{amb} = 25 °C, unless otherwise specified) VLWTG9600				
PARAMETER	TEST CONDITION	SYMBOL	VALUE	UNIT
Reverse voltage	I_R = 10 µA	V_R	5	V
DC forward current	$T_{amb} \leq 50$ °C	I_F	50	mA
Surge forward current	$t_p \leq 10$ µs	I_{FSM}	0.1	A
Power dissipation		P_V	230	mW
Junction temperature		T_j	100	°C
Operating temperature range		T_{amb}	- 40 to + 100	°C
Storage temperature range		T_{stg}	- 55 to + 100	°C
Soldering temperature	t ≤ 5 s, 1.5 mm from body preheat temperature 100 °C/30 s	T_{sd}	260	°C
Thermal resistance junction/ambient	With cathode heatsink of 70 mm^2	R_{thJA}	200	K/W
Thermal resistance junction/pin		R_{thJP}	90	K/W

OPTICAL AND ELECTRICAL CHARACTERISTICS (T_{amb} = 25 °C, unless otherwise specified) VLWTG9600, TRUE GREEN						
PARAMETER	TEST CONDITION	SYMBOL	MIN.	TYP.	MAX.	UNIT
Total flux	I_F = 50 mA, R_{thJA} = 200 °K/W	ϕ_V	2000	2500		mlm
Luminous intensity/total flux	I_F = 50 mA, R_{thJA} = 200 °K/W	I_V/ϕ_V		0.8		mcd/mlm
Dominant wavelength	I_F = 50 mA, R_{thJA} = 200 °K/W	λ_d	509	523	535	nm
Peak wavelength	I_F = 50 mA, R_{thJA} = 200 °K/W	λ_p		518		nm
Angle of half intensity	I_F = 50 mA, R_{thJA} = 200 °K/W	φ		± 30		deg
Total included angle	90 % of Total Flux Captured	φ		75		deg
Forward voltage	I_F = 50 mA, R_{thJA} = 200 °K/W	V_F		3.9	4.7	V
Reverse voltage	I_R = 10 µA	V_R	5	10		V
Junction capacitance	V_R = 0, f = 1 MHz	C_j		50		pF
Temperature coefficient of λ_{dom}	I_F = 30 mA	$TC\lambda_{dom}$		0.02		nm/K

LUMINOUS FLUX CLASSIFICATION

GROUP	TRUE GREEN LUMINOUS FLUX (mlm)	
	MIN.	MAX.
D	2000	3000
E	2500	3600
F	3000	4200

Note:
Luminous flux is tested at a current pulse duration of 25 ms and an accuracy of ± 11 %.
The above type numbers represent the order grous which include only a few brightness groups. Only one group will be shipped in one tube (there will be no mixing of two groups on each tube). In order to ensure availability, single brightness groups will not be orderable. In a similar manner for colors where wavelength groups are measured and binned, single wavelength groups will be shipped in any one tube. In order to ensure availability, single wavelength groups will not be orderable.

COLOR CLASSIFICATION

GROUP	TRUE GREEN DOM. WAVELENGTH (nm)	
	MIN.	MAX.
2	509	517
3	515	523
4	521	529
5	527	535

Note:
Wavelengths are tested at a current pulse duration of 25 ms and an accuracy of ± 1 nm.

TYPICAL CHARACTERISTICS (T_{amb} = 25 °C, unless otherwise specified)

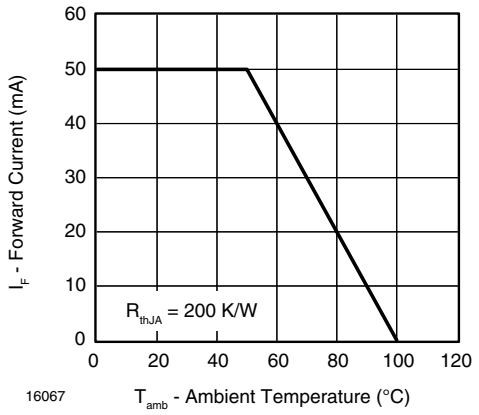

Figure 1. Forward Current vs. Ambient Temperature

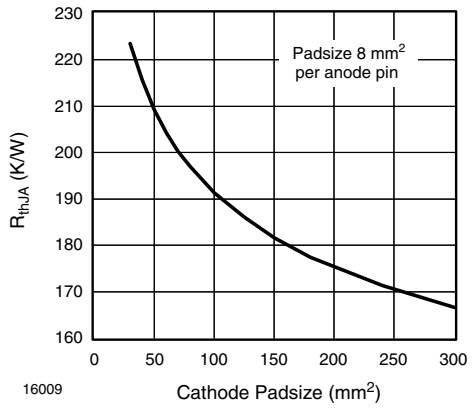

Figure 4. Thermal Resistance Junction Ambient vs. Cathode Padsize

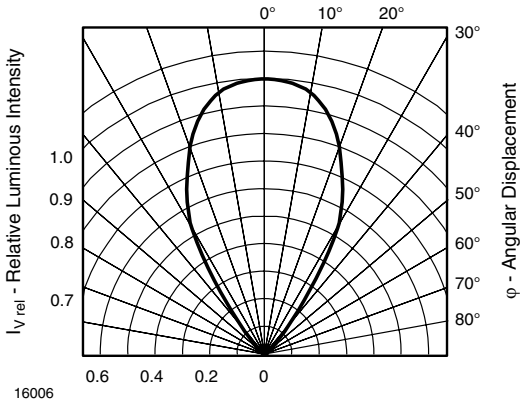

Figure 2. Rel. Luminous Intensity vs. Angular Displacement

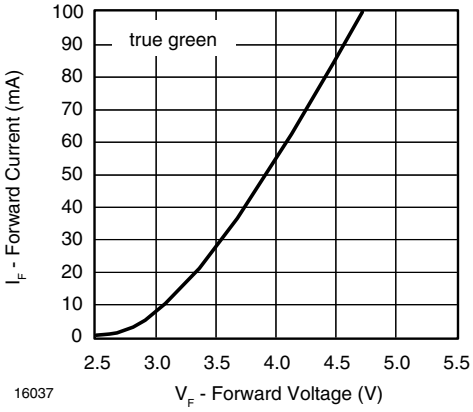

Figure 5. Forward Current vs. Forward Voltage

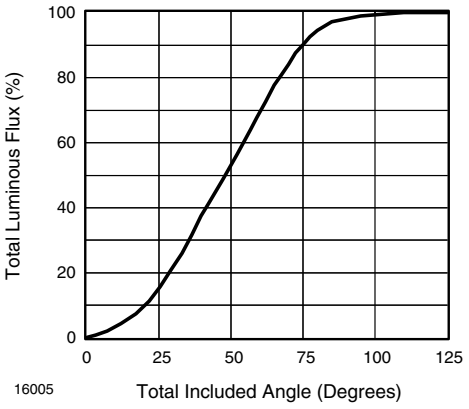

Figure 3. Percentage Total Luminous Flux vs. Total Included Angle for 90 ° Emission Angle

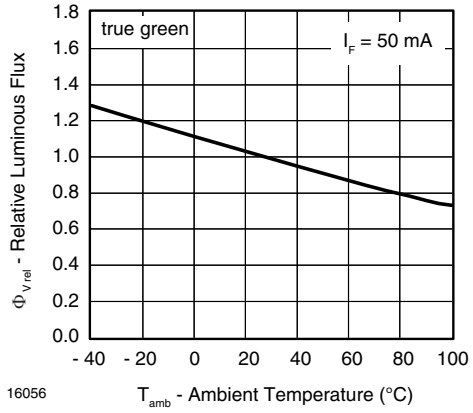

Figure 6. Rel. Luminous Flux vs. Ambient Temperature

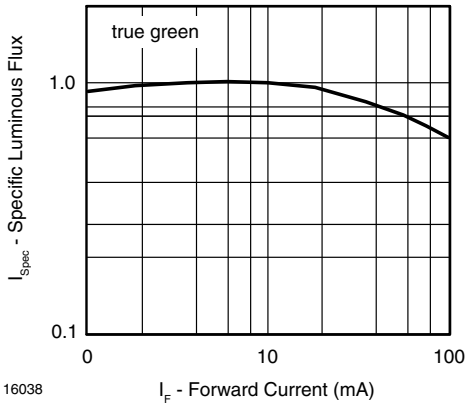

Figure 7. Specific Luminous Flux vs. Forward Current

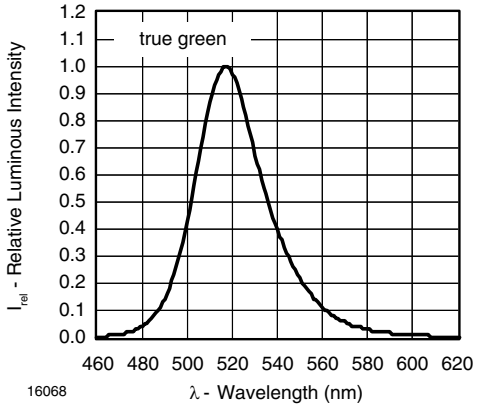

Figure 9. Relative Intensity vs. Wavelength

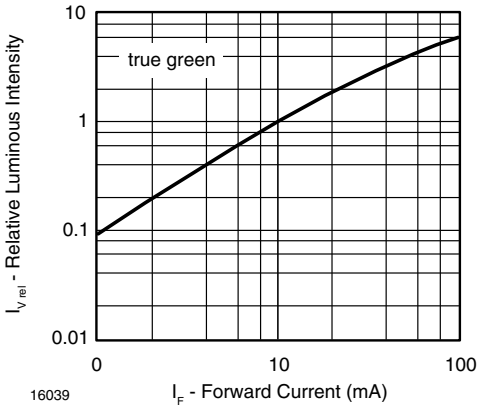

Figure 8. Relative Luminous Intensity vs. Forward Current

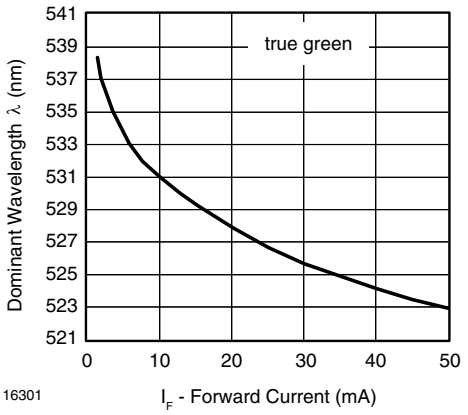

Figure 10. Dominant Wavelength vs. Forward Current

PACKAGE DIMENSIONS in millimeters

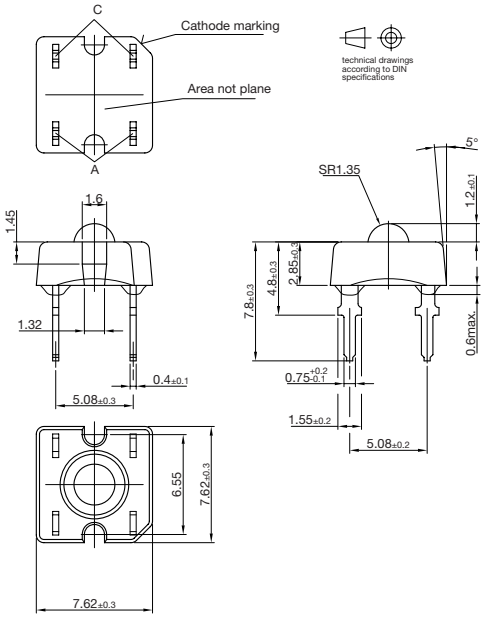

Drawing-No.: 6.544-5321.02-4
Issue: 3; 26.06.06
16004

FAN FOLD BOX Dimensions in millimeters

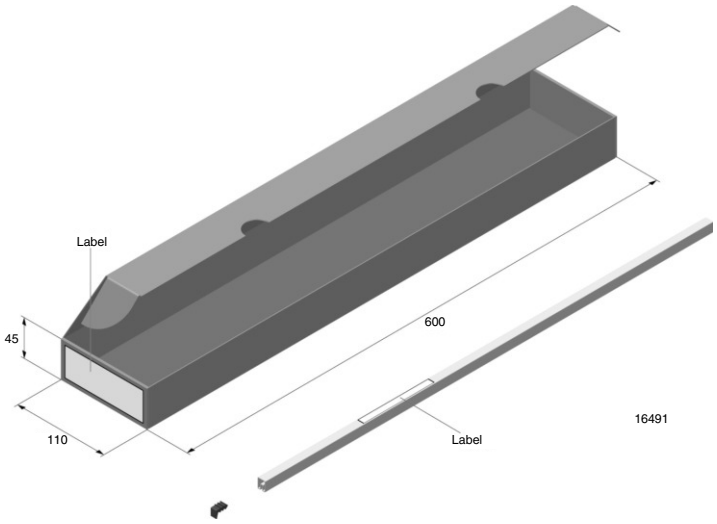

LABEL OF FAN FOLD BOX

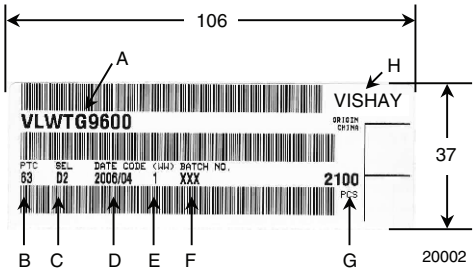

A) Type of component
B) Manufacturing plant
C) SEL - selection code (bin):
e.g.: D = code for luminous intensity group
2 = code for color group
D) Date code year/week
E) Day code (e.g. 1: Monday)
F) Batch no.
G) Total quantity
H) Company code

EXAMPLE FOR TELUX TUBE LABEL Dimensions in millimeters

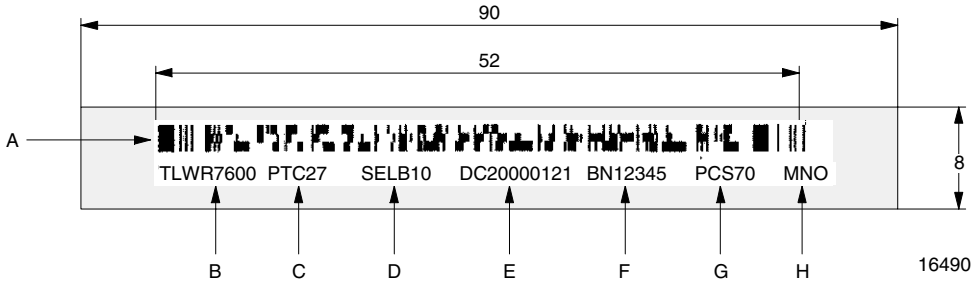

A) Bar code
B) Type of component
C) Manufacturing plant
D) SEL - selection code (bin)
Digit1 - code for luminous flux group
Digit2 - code for dominant wavelength group
Digit3 - code for forward voltage group
E) Date code
F) Batch no.
G) Total quantity
H) Company code

TUBE WITH BAR CODE LABEL Dimensions in millimeters

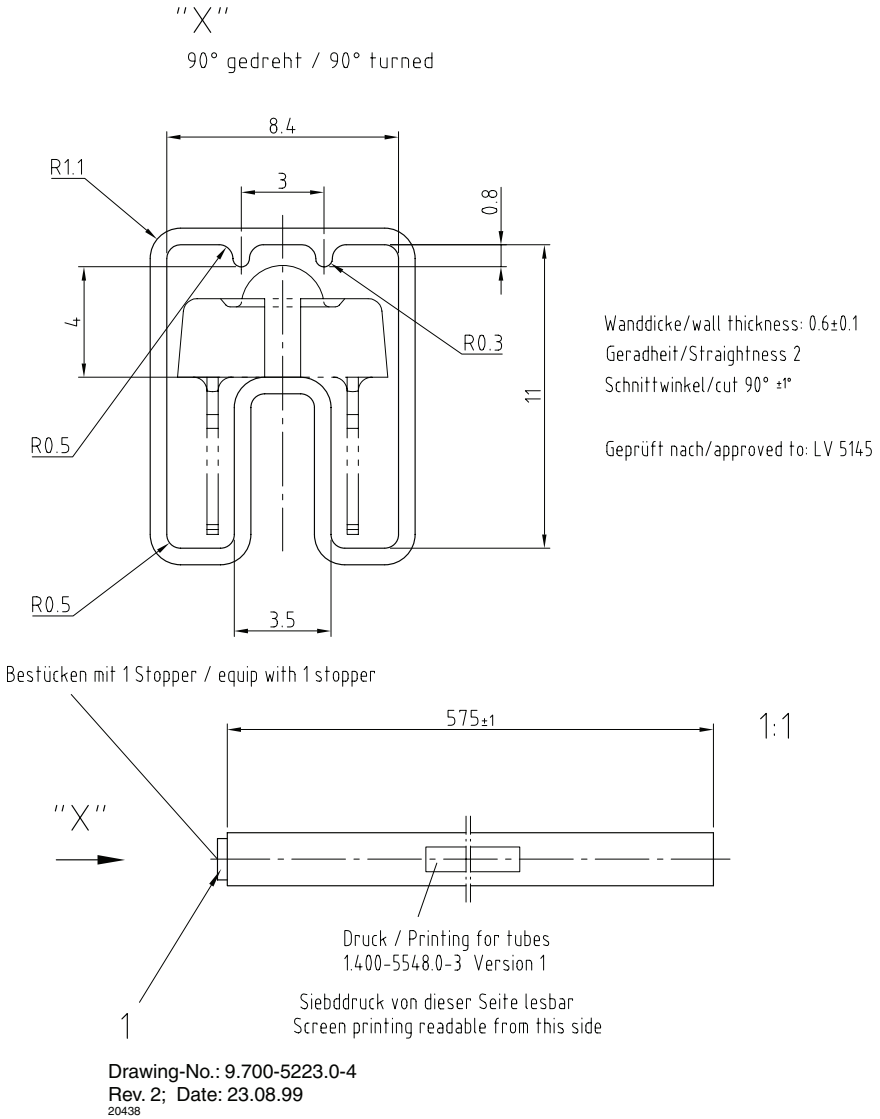

Figure 9.Drawing Proportions not Scaled

Disclaimer

All product specifications and data are subject to change without notice.

Vishay Intertechnology, Inc., its affiliates, agents, and employees, and all persons acting on its or their behalf (collectively, “Vishay”), disclaim any and all liability for any errors, inaccuracies or incompleteness contained herein or in any other disclosure relating to any product.

Vishay disclaims any and all liability arising out of the use or application of any product described herein or of any information provided herein to the maximum extent permitted by law. The product specifications do not expand or otherwise modify Vishay’s terms and conditions of purchase, including but not limited to the warranty expressed therein, which apply to these products.

No license, express or implied, by estoppel or otherwise, to any intellectual property rights is granted by this document or by any conduct of Vishay.

The products shown herein are not designed for use in medical, life-saving, or life-sustaining applications unless otherwise expressly indicated. Customers using or selling Vishay products not expressly indicated for use in such applications do so entirely at their own risk and agree to fully indemnify Vishay for any damages arising or resulting from such use or sale. Please contact authorized Vishay personnel to obtain written terms and conditions regarding products designed for such applications.

Product names and markings noted herein may be trademarks of their respective owners.