查询"2SC3928A"供应商

〈SMALL-SIGNAL TRANSISTOR〉

2SC3928A

FOR LOW FREQUENCY AMPLIFY APPLICATION

SILICON NPN EPITAXIAL TYPE(Super mini type)

DESCRIPTION

2SC3928A is a super mini package resin sealed silicon NPN epitaxial transistor,

It is designed for low frequency voltage application.

.

FEATURE

- Small collector to emitter saturation voltage.
  VCE(sat)=0.3V max
- Excellent linearity of DC forward gain.
- Super mini package for easy mounting

APPLICATION

For Hybrid IC,small type machine low frequency voltage Amplify application.

OUTLINE DRAWING

Unit:mm

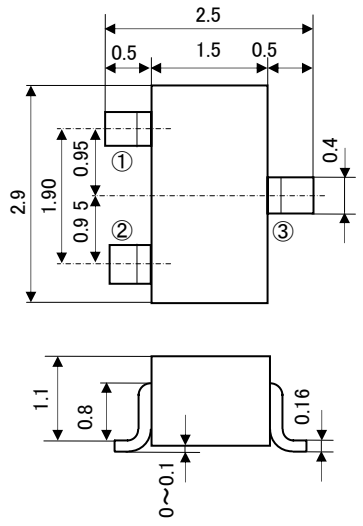

JEITA:SC-59

TERMINAL CONNECTER

①:BASE

②:EMITTER

③:COLLECTOR

MAXIMUM RATINGS(Ta=25℃)

Symbol	Parameter	Ratings	Unit
V_{CBO}	Collector to Base voltage	50	V
V_{CEO}	Collector to Emitter voltage	50	V
V_{EBO}	Emitter to Base voltage	6	V
I_O	Collector current	200	mA
P_c	Collector dissipation	200	mW
T_j	Junction temperature	+150	℃
T_{stg}	Storage temperature	-55～+150	℃

ELECTRICAL CHARACTERISTICS(Ta=25℃)

Parameter	Symbol	Test conditions	Limits			Unit
			Min	Typ	Max	
C to E break down voltage	V(BR)CEO	IC=100μA,RBE=∞	50	—	—	V
Collector cut off current	ICBO	VCB=50V,IE=0	—	—	0.1	μA
Emitter cut off current	IEBO	VEB=4V,IC=0	—	—	0.1	μA
DC forward current gain	hFE	VCE=6V,IC=1mA	120	(※)	820	—
DC forward current gain	hFE	VCE=6V,IC=0.1mA	70	—	—	—
C to E Saturation Vlotage	VCE(sat)	IC=100mA,IB=10mA	—	—	0.3	V
Gain bandwidth product	fT	VCE=6V,IE=-10mA	—	200	—	MHz
Collector output capacitance	Cob	VCB=6V,IE=0,f=1MHz	—	4	—	pF
Noise Figure	NF	VCE=6V,IE=-0.1mA,f=1kHz,RG=2kΩ	—	—	15	dB

※) It shows hFE classification in below table.

Item	Q	R	S	T
hFE Item	120~270	180~390	270~560	390~820

查询"2SC3928A"供应商

ISAHAYA ELECTRONICS CORPORATION

Marketing division, Marketing planning department

6-41 Tsukuba, Isahaya, Nagasaki, 854-0065 Japan

Keep safety first in your circuit designs!

·ISAHAYA Electronics Corporation puts the maximum effort into making semiconductor products better and more reliable, but there is always the possibility that trouble may occur with them. Trouble with semiconductors may lead to personal injury, fire or property damage. Remember to give due consideration to safety when making your circuit designs, with appropriate measures such as (1) placement of substitutive, auxiliary, (2) use of non-farmable material or (3) prevention against any malfunction or mishap.

Notes regarding these materials

·These materials are intended as a reference to our customers in the selection of the ISAHAYA products best suited to the customer's application; they don't convey any license under any intellectual property rights, or any other rights, belonging ISAHAYA or third party.

·ISAHAYA Electronics Corporation assumes no responsibility for any damage, or infringement of any third party's rights, originating in the use of any product data, diagrams, charts or circuit application examples contained in these materials.

·All information contained in these materials, including product data, diagrams and charts, represent information on products at the time of publication of these materials, and are subject to change by ISAHAYA Electronics Corporation without notice due to product improvements or other reasons. It is therefore recommended that customers contact ISAHAYA Electronics Corporation or an authorized ISAHAYA products distributor for the latest product information before purchasing product listed herein.

·ISAHAYA Electronics Corporation products are not designed or manufactured for use in a device or system that is used under circumstances in which human life is potentially at stake. Please contact ISAHAYA electronics corporation or an authorized ISAHAYA products distributor when considering the use of a product contained herein for any specific purposes, such as apparatus or systems for transportation, vehicular, medical, aerospace, nuclear, or undersea repeater use.

·The prior written approval of ISAHAYA Electronics Corporation is necessary to reprint or reproduce in whole or in part these materials.

·If these products or technologies are subject to the Japanese export control restrictions, they must be exported under a license from the Japanese government and cannot be imported into a country other than the approved destination. Any diversion or re-export contrary to the export control laws and regulations of Japan and/or the country of destination is prohibited.

·Please contact ISAHAYA Electronics Corporation or authorized ISAHAYA products distributor for further details on these materials or the products contained therein.

Jan.2003