查询"160130"供应商

YELLOW-GREEN Item No.: 160130

1. This specification applies to GaP / GaP LED Chips

2. Structure

2.1 Mesa structure

2.2 Electrodes

p-side (anode)	Au alloy
n-side (cathode)	Au alloy

3. Outlines (dimensions in microns)

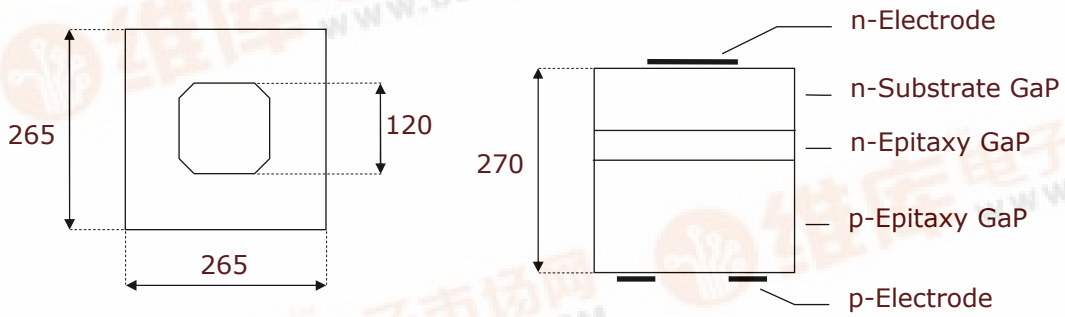

Wire bond contacts can also be circular or square

4. Electrical and optical characteristics (T=25°C)

Parameter	Symbol	Conditions	min	typ	max	Unit
Forward voltage	V_F	I_F = 20 mA		2,25	2,50	V
Reverse current	I_R	V_R = 5 V			10	µA
Luminous intensity *	I_V	I_F = 20 mA	6,5	10,0		mcd
Peak wavelength	λ_P	I_F = 20 mA		568		nm

* On request, wafers will be delivered according to luminous intensity classes
Brightness measurement at OSA on gold plate

5. Packing

Dice on adhesive film with 1) wire bond side on top
2) back contact on top

6. Labeling

Type	Lot No.	I_V typ min max	Quantity

© 2004

OSA Opto Light GmbH · Tel. +49-(0)30-65 76 26 83 · Fax +49-(0)30-65 76 26 81 · contact@osa-opto.com

找PDF 维库一下 pdf.dzsc.com