查询"128144"供应商

INFRA-RED Item No.: 128144

1. This specification applies to GaAlAs / GaAlAs LED Chips

2. Structure

2.1 Mesa structure

2.2 Electrodes p-side (anode) Au alloy
n-side (cathode) Au alloy

3. Outlines (dimensions in microns)

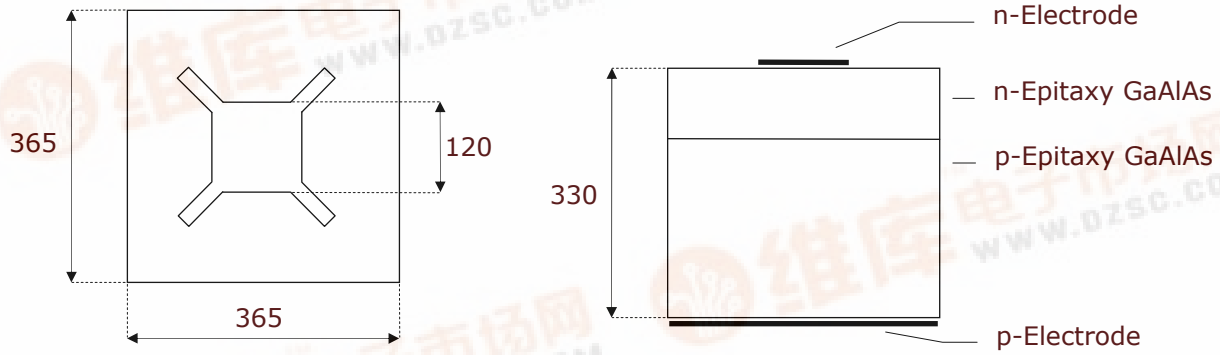

Wire bond contacts can also have a square

4. Electrical and optical characteristics (T=25°C)

Parameter	*Symbol*	*Conditions*	*min*	*typ*	*max*	*Unit*
Forward voltage	V_F	I_F = 20 mA		1,30	1,50	V
Reverse current	I_R	V_R = 5 V			10	µA
output Power *	Φ_e	I_F = 20 mA	1,3	1,8		mW
		I_F = 50 mA	3,2	4,5		
Switching time	t_r, t_f	I_F = 20 mA		600		ns
Peak wavelength	λ_P	I_F = 20 mA		910		nm

Power measurement at OSA on gold plate

5. Packing

Dice on adhesive film with 1) wire bond side on top
2) back contact on top

6. Labeling

Type	Lot No.	Φ_e typ min max	Quantity

© 2004

OSA Opto Light GmbH · Tel. +49-(0)30-65 76 26 83 · Fax +49-(0)30-65 76 26 81 · contact@osa-opto.com

找PDF 维库一下 pdf.dzsc.com