查询"2A"供应商

AUTOPOLARITY IRED INPUT, DARLINGTON OUTPUT

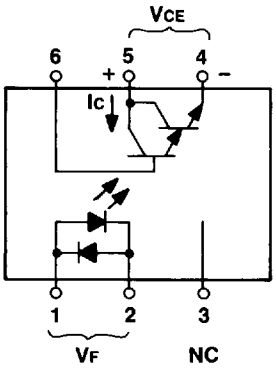

Single Channel

Base Lead to No. 6 Pin	Specified Input Current (I_F) mA	Current Transfer Ratio (CTR) min	Sustained Voltage [$V_{CE(SUS)}$] V min	(I_{CEO})[1] nA max	Isolation Current[2] (I_{ISO}) nA max	Pulse Time (T_r,T_f) μsec max	Device Code Number
yes	2.0	7.5	60	100	100	100	4E[3]
yes	0.1	2.0	12	100	100	200	4N
none	0.2	1.8	12	100	100	200	4H
none	1.0	4.0	30	200	100	—	9E[3]

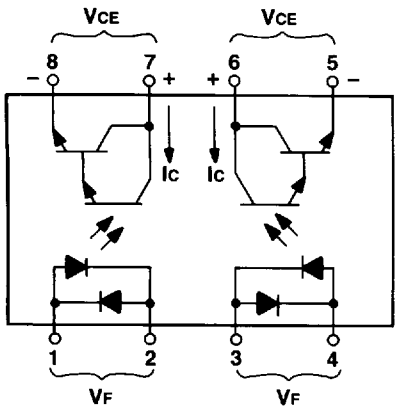

Dual Channel

Specified Input Current (I_F) mA	Current Transfer Ratio (CTR) min	Sustained Voltage [$V_{CE(SUS)}$] V min	(I_{CEO})[1] nA max	Isolation Current[2] (I_{ISO}) nA max	Pulse Time (T_r,T_f) μsec max	Device Code Number
2.0	7.5	60	100	100	100	2A

Applications:
- **ac signal monitoring**
- **Polarity reversing**
- **Voltage level shifting**
- **Telephone ring detector**
- **On/off hook detector**

[1] Collector-Emitter Leakage Current
[2] Specified at (V_{ISO}) = 2500V
[3] UL recognized (File No. E86340).
Approvals can be obtained for other devices.