DUAL SYNCHRONOUS STEP-DOWN CONTROLLER FOR LOW VOLTAGE POWER RAILS

Check for Samples: TPS53125

FEATURES

- **D-CAP2™ Mode Control**
  - **Fast Transient Response**
  - **No External Parts Required for Loop Compensation**
  - **Compatible With Ceramic Output Capacitors**
- **High Initial Reference Accuracy (±1%)**
- **Low Output Ripple**
- **Wide Input Voltage Range: 4.5 V to 24 V**
- **Output Voltage Range: 0.76 V to 5.5 V**
- **Low-Side $R_{DS(ON)}$ Loss-Less Current Sensing**
- **Adaptive Gate Drivers with Integrated Boost Diode**
- **Adjustable Soft Start**
- **Non-Sinking Pre-Biased Soft Start**
- **350-kHz Switching Frequency**
- **Cycle-by-Cycle Over-Current Limiting Control**
- **30-mV to 300-mV OCP Threshold Voltage**
- **Thermally Compensated OCP by 4000 ppm/°C at I_{TRIP}**

APPLICATIONS

- **Point-of-Load Regulation in Low Power Systems for Wide Range of Applications**
  - **Digital TV Power Supply**
  - **Networking Home Terminal**
  - **Digital Set-Top Box (STB)**
  - **DVD Player/Recorder**
  - **Gaming Consoles**

DESCRIPTION

The TPS53125 is a dual, adaptive on-time D-CAP2™ mode synchronous buck controller. The part enables system designers to cost effectively complete the suite of various end equipment's power bus regulators with a low external component count and low standby consumption. The main control loop for the TPS53125 uses the D-CAP2™ Mode topology which provides a very fast transient response with no external component.

The TPS53125 also has a proprietary circuit that enables the device to adapt not only low equivalent series resistance (ESR) output capacitors such as POSCAP/SP-CAP, but also ceramic capacitor. The part provides a convenient and efficient operation with conversion voltages from 4.5 V to 24 V and output voltage from 0.76 V to 5.5 V.

The TPS53125 is available in the 24 pin RGE/PW package, and is specified from –40°C to 85°C ambient temperature range.

查询"TPS53125"供应商

TYPICAL APPLICATION CIRCUITS

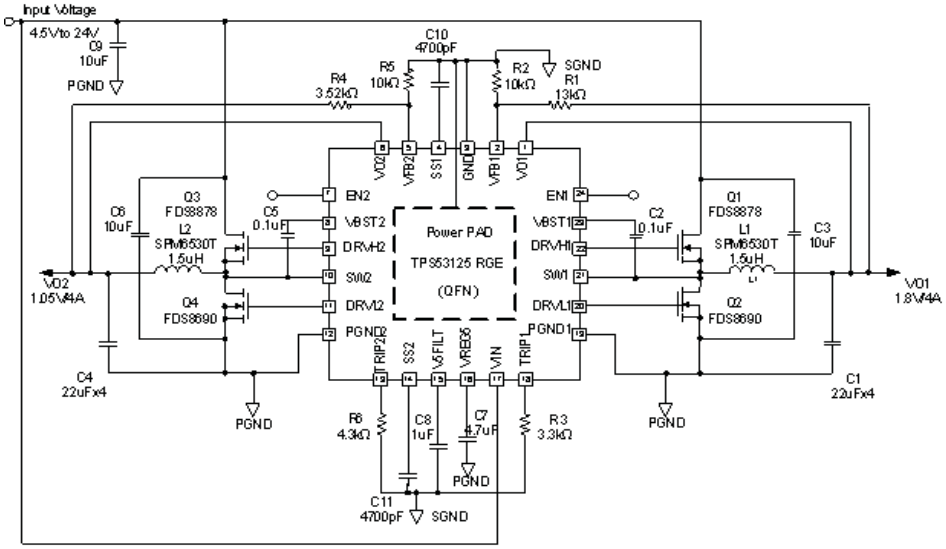

Figure 1. QFN

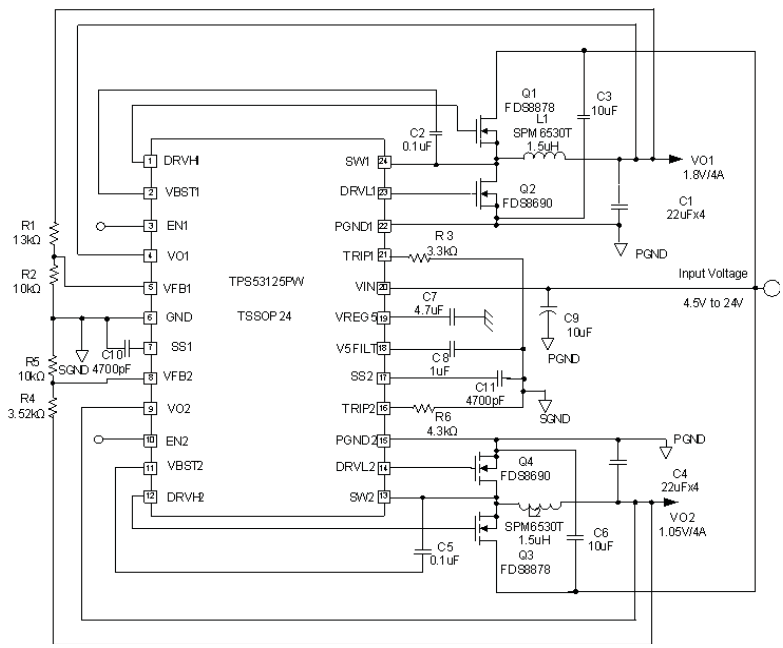

Figure 2. TSSOP

ORDERING INFORMATION(1)

T_A	PACKAGE(2) (3)	ORDERING PART NUMBER	PINS	OUTPUT SUPPLY	ECO PLAN
–40°C to 85°C	Plastic Quad Flat Pack (QFN)	TPS53125RGET	24	Tape-and-Reel	Green (RoHS and no Sb/Br)
		TPS53125RGER		Tape-and-Reel	
	TSSOP	TPS53125PWR		Tape-and-Reel	
		TPS53125PW		Tube	

(1) For the most current package and ordering information, see the Package Option Addendum at the end of this document, or see the TI web site at www.ti.com.
(2) Package drawings, thermal data, and symbolization are available at www.ti.com/packaging.
(3) All packaging options have Cu NIPDAU lead/ball finish.

ABSOLUTE MAXIMUM RATINGS

over operating free-air temperature range (unless otherwise noted) (1)

			VALUE	UNIT
V_I	Input voltage range	VIN, EN1, EN2	–0.3 to 26	V
		VBST1, VBST2	–0.3 to 32	
		VBST1 - SW1, VBST2 - SW2	–0.3 to 6	
		V5FILT, VFB1, VFB2, TRIP1, TRIP2, VO1, VO2	–0.3 to 6	
		SW1, SW2	–2 to 26	
V_O	Output voltage range	DRVH1, DRVH2	–1 to 32	V
		DRVH1 - SW1, DRVH2 - SW2	–0.3 to 6	
		DRVL1, DRVL2, VREG5, SS1, SS2	–0.3 to 6	
		PGND1, PGND2	–0.3 to 0.3	
T_A	Operating ambient temperature range		–40 to 85	°C
T_{STG}	Storage temperature range		–55 to 150	°C
T_J	Junction temperature range		–40 to 150	°C

(1) Stresses beyond those listed under "absolute maximum ratings" may cause permanent damage to the device. These are stress ratings only and functional operation of the device at these or any other conditions beyond those indicated under "recommended operating conditions" are not implied. Exposure to absolute-maximum-rated conditions for extended periods may affect device reliability.

DISSIPATION RATINGS

2-oz. trace and copper pad with solder

PACKAGE	T_A < 25°C POWER RATING	DERATING FACTOR ABOVE T_A = 25°C	T_A = 85°C POWER RATING
24-pin QFN	2.33 W	23.3 mW/°C	0.93 W
24-pin TSSOP	0.778 W	7.8 mW/°C	0.31 W

RECOMMENDED OPERATING CONDITIONS

over operating free-air temperature range (unless otherwise noted)

			MIN	MAX	UNIT
V_{IN}	Supply input voltage	VIN	4.5	24	V
		V5FILT	4.5	5.5	
V_I	Input voltage	VBST1, VBST2	–0.1	30	V
		VBST1 - SW1, VBST2 - SW2	–0.1	5.5	
		VFB1, VFB2, VO1, VO2	–0.1	5.5	
		TRIP1, TRIP2	–0.1	0.3	
		EN1, EN2	–0.1	24	
		SW1, SW2	–1.8	24	

RECOMMENDED OPERATING CONDITIONS (continued)

over operating free-air temperature range (unless otherwise noted)

			MIN	MAX	UNIT
V_O	Output voltage	DRVH1, DRVH2	–0.1	30	V
		VBST1 - SW1, VBST2 - SW2	–0.1	5.5	
		DRVL1, DRVL2, VREG5, SS1, SS2	–0.1	5.5	
		PGND1, PGND2	–0.1	0.1	
T_A	Operating free-air temperature		–40	85	°C
T_J	Operating junction temperature		–40	125	°C

ELECTRICAL CHARACTERISTICS

over operating free-air temperature range (unless otherwise noted)

PARAMETER		TEST CONDITIONS	MIN	TYP	MAX	UNIT
SUPPLY CURRENT						
I_{IN}	VIN supply current	VIN current, T_A = 25°C, VREG5 tied to V5FILT, EN1 = EN2 = 5 V, VFB1 = VFB2 = 0.8 V, SW1 = SW2 = 0.5 V		450	800	µA
I_{VINSDN}	VIN shutdown current	VIN current, T_A = 25°C, no load , EN1 = EN2 = 0 V, VREG5 = ON		30	60	µA
VFB VOLTAGE AND DISCHARGE RESISTANCE						
V_{BG}	Bandgap initial regulation accuracy	T_A = 25°C	–1		1	%
V_{VFBTHx}	VFBx threshold voltage	T_A = 25°C, SW_{inj} = OFF	755	765	775	mV
		TA = 0°C to 70°C, SW_{inj} = OFF (1)	753.5		776.5	
		T_A = -40°C to 85°C, SW_{inj} = OFF (1)	752		778	
I_{VFB}	VFB input current	VFBx = 0.8 V, T_A = 25°C	–100	–10	100	nA
R_{Dischg}	VO discharge resistancee	ENx = 0 V, VOx = 0.5 V, T_A = 25°C		40	80	Ω
VREG5 OUTPUT						
V_{VREG5}	VREG5 output voltage	T_A = 25°C, 5.5 V < VIN < 24 V, 0 < I_{VREG5} < 10 mA	4.8	5.0	5.2	V
V_{LN5}	Line regulation	5.5 V < VIN < 24 V, I_{VREG5} = 10 mA			20	mV
V_{LD5}	Load regulation	1 mA < I_{VREG5} < 10 mA			40	mV
I_{VREG5}	Output current	VIN = 5.5 V, V_{REG5} = 4.0 V, T_A = 25°C		170		mA
OUTPUT: N-CHANNEL MOSFET GATE DRIVERS						
R_{DRVH}	DRVH resistance	Source, I_{DRVHx} = –100 mA		5.5	11	Ω
		Sink, I_{DRVHx} = 100 mA		2.5	5	
R_{DRVL}	DRVL resistance	Source, I_{DRVLx} = –100 mA		4	8	Ω
		Sink, I_{DRVLx} = 100 mA		2	4	
T_D	Dead time	DRVHx-low to DRVLx-on	20	50	80	ns
		DRVLx-low to DRVHx-on	20	40	80	
INTERNAL BOOST DIODE						
V_{FBST}	Forward voltage	$V_{VREG5-VBSTx}$, I_F = 10 mA, T_A = 25°C	0.7	0.8	0.9	V
I_{VBSTLK}	VBST leakage current	VBSTx = 29 V, SWx = 24 V, T_A = 25°C		0.1	1	µA
ON-TIME TIMER CONTROL						
T_{ON1L}	CH1 on time	SW1 = 12 V, VO1 = 1.8 V		490		ns
T_{ON2L}	CH2 on time	SW2 = 12 V, VO2 = 1.8 V		390		ns

(1) Not production tested - ensured by design.

ELECTRICAL CHARACTERISTICS (continued)

over operating free-air temperature range (unless otherwise noted)

PARAMETER		TEST CONDITIONS	MIN	TYP	MAX	UNIT
T_{OFF1L}	CH1 min off time	SW1 = 0.7 V, T_A = 25°C, VFB1 = 0.7 V		285		ns
T_{OFF2L}	CH2 min off time	SW2 = 0.7 V, T_A = 25°C, VFB2 = 0.7 V		285		ns
SOFT START						
I_{SSC}	SS1/SS2 charge current	V_{SS1}/V_{SS2} = 0 V, T_A = 25°C	–1.5	–2	–2.5	µA
TC_{ISSC}	I_{SSC} temperature coefficient	On the basis of 25°C (1)	–4		3	nA/°C
I_{SSD}	SS1/SS2 discharge current	V_{SS1}/V_{SS2} = 0.5 V	100	150		µA
UVLO						
$V_{UV5VFILT}$	V5FILT UVLO threshold	Wake up	3.7	4.0	4.3	V
		Hysteresis	0.2	0.3	0.4	
LOGIC THRESHOLD						
V_{ENH}	ENx high-level input voltage	EN 1/2	2.0			V
V_{ENL}	ENx low-level input voltage	EN 1/2			0.3	V
CURRENT SENSE						
I_{TRIP}	TRIP source current	VTRIPx = 0.1 V, T_A = 25°C	8.5	10	11.5	µA
TC_{ITRIP}	I_{TRIP} temperature coefficient	On the basis of 25°C		4000		ppm/°C
V_{OCLoff}	OCP compensation offset	($V_{TRIPx\text{-}GND}$-$V_{PGNDx\text{-}SWx}$) voltage, $V_{TRIPx\text{-}GND}$ = 60 mV, T_A = 25°C	–15	0	15	mV
		($V_{TRIPx\text{-}GND}$-$V_{PGNDx\text{-}SWx}$) voltage, $V_{TRIPx\text{-}GND}$ = 60 mV	–20		20	
V_{Rtrip}	Current limit threshold setting range	$V_{TRIPx\text{-}GND}$ voltage	30		300	mV
OUTPUT UNDERVOLTAGE AND OVERVOLTAGE PROTECTION						
V_{OVP}	Output OVP trip threshold	OVP detect	110	115	120	%
T_{OVPDEL}	Output OVP prop delay			1.5		µs
V_{UVP}	Output UVP trip threshold	UVP detect	65	70	75	%
		Hysteresis (recover < 20 µs)		10		
T_{UVPDEL}	Output UVP delay		17	30	40	µs
T_{UVPEN}	Output UVP enable delay	UVP enable delay / soft-start time	x1.4	x1.7	x2.0	ms
THERMAL SHUTDOWN						
T_{SDN}	Thermal shutdown threshold	Shutdown temperature (2)		150		°C
		Hysteresis (2)		20		

(2) Not production tested - ensured by design.

TERMINAL FUNCTIONS

PIN Fucntion Table

TERMINAL			I/O	DESCRIPTION
NAME	QFN 24	TSSOP 24		
VBST1, VBST2	23, 8	2, 11	I	Supply input for high-side NFET driver. Bypass to SWx with a high-quality 0.1-µF ceramic capacitor. An external schottky diode can be added from VREG5 if forward drop is critical to drive the high-side FET.
EN1, EN2	24, 7	3, 10	I	Enable. Pull High to enable SMPS.
VO1, VO2	1, 6	4, 9	I	Output voltage inputs for on-time adjustment and output discharge. Connect directly to the output voltage.
VFB1, VFB2	2, 5	5, 8	I	D-CAP2 feedback inputs. Connect to output voltage with resistor divider.

PIN Fucntion Table (continued)

TERMINAL			I/O	DESCRIPTION
NAME	QFN 24	TSSOP 24		
GND	3	6	I	Signal ground pin. Connect to PGND1, PGND2 and system ground at a single point.
DRVH1, DRVH2	22, 9	1, 12	O	High-side N-Channel MOSFET gate driver outputs. SWx referenced drivers switch between SWx (OFF) and VBSTx (ON).
SW1, SW2	21, 10	24, 13	I/O	Switch node connections for both the high-side drivers and the over current comparators.
DRVL1, DRVL2	20, 11	23, 14	O	Low-side N-Channel MOSFET gate driver outputs. PGND referenced drivers switch between PGNDx (OFF) and VREG5 (ON).
PGND1, PGND2	19, 12	22, 15	I/O	Power ground connections for both the low-side drivers and the over current comparators. Connect PGND1, PGND2 and GND strongly together near the IC.
TRIP1, TRIP2	18, 13	21, 16	I	Over current threshold programming pin. Connect to GND with a resistor to GND to set threshold for low-side $R_{DS(ON)}$ current limit.
VIN	17	20	I	Supply Input for 5-V linear regulator. Bypass to GND with a minimum high-quality 0.1-μF ceramic capacitor.
V5FILT	15	18	I	5-V supply input for the entire control circuitry except the MOSFET drivers. Bypass to GND with a minimum high-quality 1.0-μF ceramic capacitor. V5FILT is connected to VREG5 via an internal 10-Ω resistor.
VREG5	16	19	O	Output of 5-V linear regulator and supply for MOSFET drivers. Bypass to GND with a minimum high-quality 4.7-μF ceramic capacitor. VREG5 is connected to V5FILT via an internal 10-Ω resistor.
SS1, SS2	4,14	7, 17	O	Soft-start programming pin. Connect capacitor from SSx pin to GND to program soft-start time.

QFN PACKAGE
(TOP VIEW)

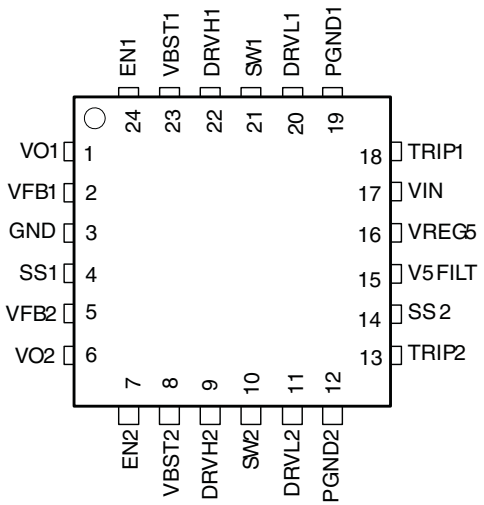

TSSOP PACKAGE
(TOP VIEW)

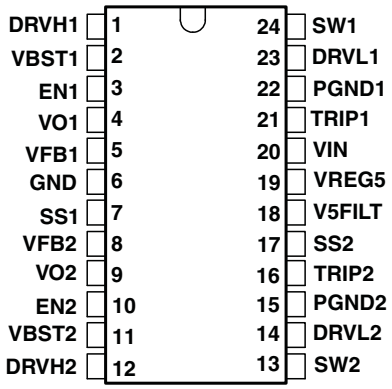

FUNCTIONAL BLOCK DIAGRAM

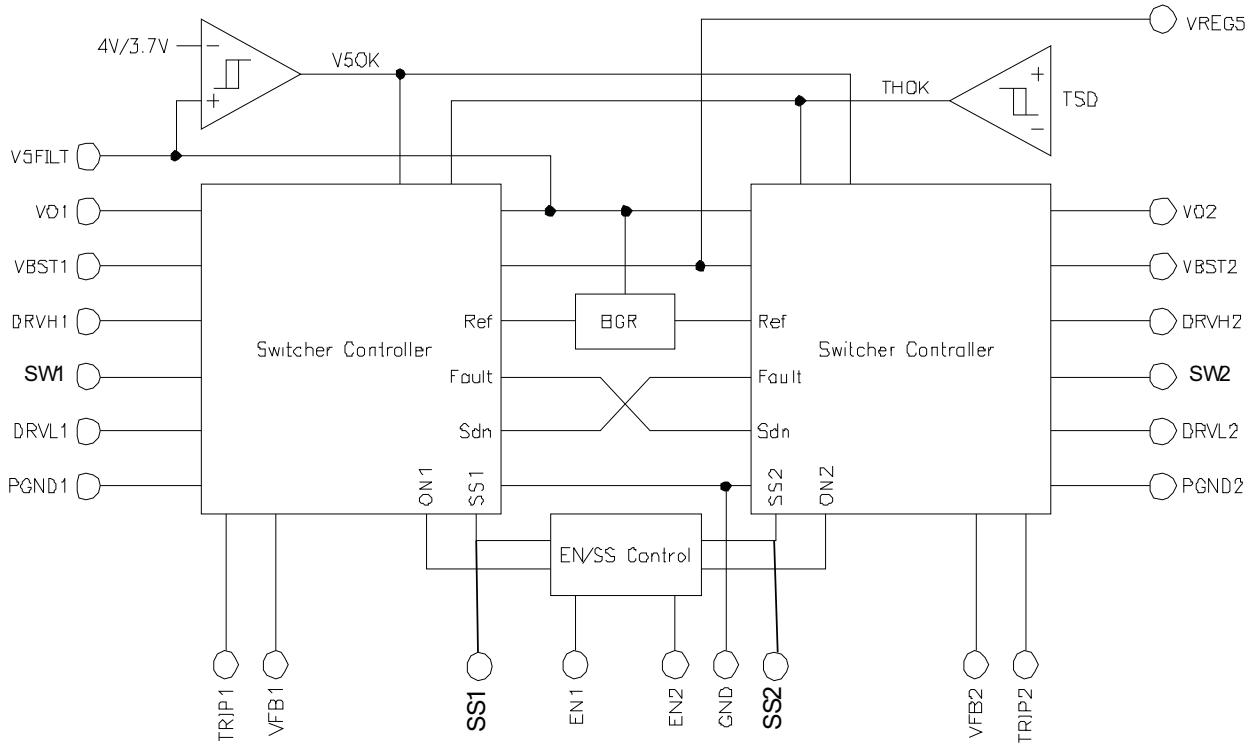

查询"TPS53125"供应商

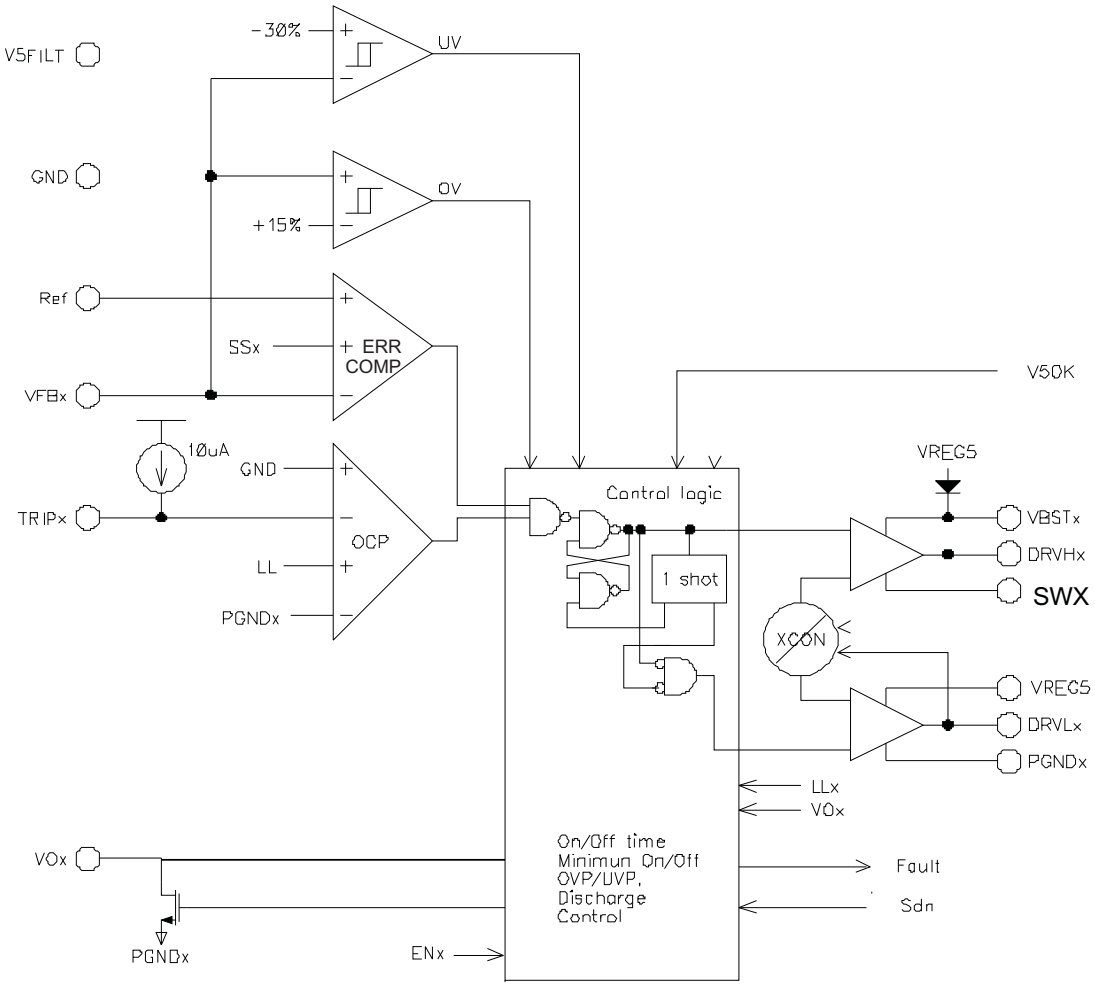

DETAILED DESCRIPTION

PWM Operation

The main control loop of the TPS53125 is an adaptive on-time pulse width modulation (PWM) controller using a proprietary D-CAP2™ mode control. D-CAP2™ mode control combines constant on-time control with an internal compensation circuit for pseudo-fixed frequency and low external component count configuration with both low ESR and ceramic output capacitors. It is stable even with virtually no ripple at the output.

At the beginning of each cycle, the synchronous high-side MOSFET is turned on. After an internal one-shot timer expires, this MOSFET is turned off. When the feedback voltage falls below the reference voltage, the one-shot timer is reset and the high-side MOSFET is turned back on. The one shot is set by the converter input voltage VIN, and the output voltage VO, to maintain a pseudo-fixed frequency over the input voltage range. An internal ramp is added to the reference voltage to simulate output ripple, eliminating the need for ESR induced output ripple from D-CAP mode control.

Drivers

Each channel of the TPS53125 contains two high-current resistive MOSFET gate drivers. The low-side driver is a PGND referenced, VREG5 powered driver designed to drive the gate of a high-current, low $R_{DS(ON)}$ N-channel MOSFET whose source is connected to PGND. The high-side driver is a floating SWx referenced VBST powered driver designed to drive the gate of a high-current, low $R_{DS(ON)}$ N-channel MOSFET. To maintain the VBST voltage during the high-side driver ON time, a capacitor is placed from SWx to VBSTx. Each driver draws average current equal to gate charge (Q_g at V_{gs} = 5 V) times switching frequency (f_{SW}).

To prevent cross-conduction, there is a narrow dead-time when both high-side and low-side drivers are OFF between each driver transition. During this time the inductor current is carried by one of the MOSFETs body diodes.

PWM Frequency and Adaptive On-Time Control

TPS53125 employs adaptive on-time control scheme and does not have a dedicated on board oscillator.

TPS53125 runs with pseudo-constant frequency by using the input voltage and output voltage to set the on-time one-shot timer. The on-time is inversely proportional to the input voltage and proportional to the output voltage. Therefore, when the duty ratio is VOUT/VIN, the frequency is constant.

5-Volt Regulator

The TPS53125 has an internal 5-V low-dropout (LDO) regulator to provide a regulated voltage for all both drivers and the IC's internal logic. A high-quality 4.7-µF or greater ceramic capacitor from VREG5 to GND is required to stabilize the internal regulator. An internal 10-Ω resistor from VREG5 filters the regulator output to the IC's analog and logic input voltage, V5FILT. An additional high-quality 1.0-µF ceramic capacitor is required from V5FILT to GND to filter switching noise from VREG5.

Soft Start

The TPS53125 has a programmable soft-start . When the ENx pin becomes high, 2.0-µA current begins charging the capacitor connected from the SS pin to GND. The internal reference for the D-CAP2™ mode control comparator is overridden by the soft-start voltage until the soft-start voltage is greater than the internal reference for smooth control of the output voltage during start up.

Pre-Bias Support

The TPS53125 supports pre-bias start-up without sinking current from the output capacitor. When enabled, the low-side driver is held off until the soft-start commands a voltage higher than the pre-bias level (internal soft-start becomes greater than feedback voltage (VFB)), then the TPS53125 slowly activates synchronous rectification by limiting the first DRVL pulses with a narrow on-time. This limited on-time is then incremented on a cycle-by-cycle basis until it coincides with the full 1-D off-time. This scheme prevents the initial sinking of current from the pre-bias output, and ensure that the output voltage (VOUT) starts and ramps up smoothly into regulation and the control loop is given time to transition from pre-biased start-up to normal mode operation.

Output Discharge Control

TPS53125 discharges the outputs when ENx is low, or the controller is turned off by the protection functions (OVP, UVP, UVLO, and thermal shutdown). The device discharges output using an internal 40-Ω MOSFET which is connected to VOx and PGNDx. The external low-side MOSFET is not turned on during the output discharge operation to avoid the possibility of causing negative voltage at the output. This discharge ensures that on start the regulated voltage always initializes from 0 V.

Over Current Limit

TPS53125 has cycle-by-cycle over current limit feature. The over current limits the inductor valley current by monitoring the voltage drop across the low-side MOSFET $R_{DS(ON)}$ during the low-side driver on-time. If the inductor current is larger than the over current limit (OCL), the TPS53125 delays the start of the next switching cycle until the sensed inductor current falls below the OCL current. MOSFET $R_{DS(ON)}$ current sensing is used to provide an accuracy and cost effective solution without external devices. To program the OCL, the TRIP pin should be connected to GND through a trip voltage setting resistor, according to the following equations.

$$V_{TRIP} = \left(I_{OCL} - \frac{(V_{IN} - V_O)}{2 \bullet L1 \bullet f_{SW}} \bullet \frac{V_O}{V_{IN}} \right) \bullet R_{DS(ON)} \tag{1}$$

$$R_{TRIP}\,(k\Omega) = \frac{V_{TRIP}\,(mV)}{I_{TRIP}\,(\mu A)} \tag{2}$$

The trip voltage should be between 30 mV to 300 mV over all operational temperature, including the 4000-ppm/°C temperature slope compensation for the temperature dependency of the $R_{DS(ON)}$.

If the load current exceeds the over current limit, the voltage will begin to drop. If the over current conditions continues the output voltage will fall below the under voltage protection threshold and the TPS53125 will shut down.

In an over current condition, the current to the load exceeds the current to the output capacitor; thus the output voltage tends to fall off. Eventually, it will end up with crossing the under voltage protection threshold and shutdown.

Over/Under Voltage Protection

TPS53125 monitors a resistor divided feedback voltage to detect over and under voltage. If the feedback voltage is higher than 115% of the reference voltage, the OVP comparator output goes high and the circuit latches the high-side MOSFET driver OFF and the low-side MOSFET driver ON.

When the feedback voltage is lower than 70% of the reference voltage, the UVP comparator output goes high and an internal UVP delay counter begins counting. After 30 µs, TPS53125 latches OFF both top and bottom MOSFET drivers. This function is enabled approximately 1.7 x T_{SS} after power-on. The OVP and UVP latch off is reset when EN goes low level.

UVLO Protection

TPS53125 has V5FILT under voltage lock out protection (UVLO) that monitors the voltage of V5FILT pin.

When the V5FILT voltage is lower than UVLO threshold voltage, the device is shut off. All output drivers are OFF and output discharge is ON. The UVLO is non-latch protection.

Thermal Shutdown

The TPS53125 includes an over temperature protection shut-down feature. If the TPS53125 die temperature exceeds the OTP threshold (typically 150°C), both the high-side and low-side drivers are shut off, the output voltage discharge function is enabled and then the device is shut off until the die temperature drops. Thermal shutdown is a non-latch protection.

TYPICAL CHARACTERISTICS

VIN SUPPLY CURRENT vs JUNCTION TEMPERATURE

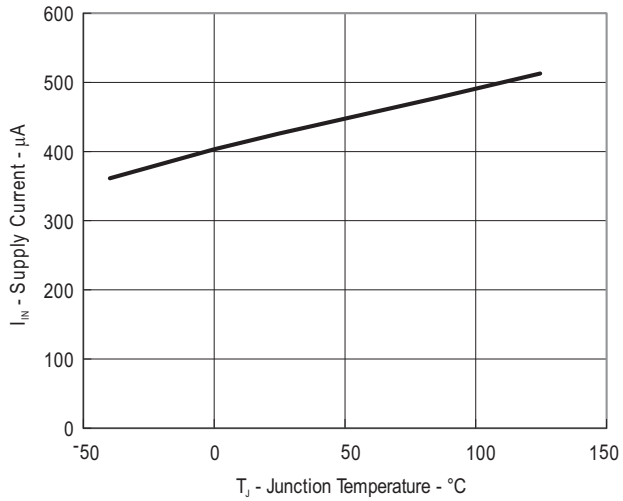

Figure 3.

VIN SHUTDOWN CURRENT vs JUNCTION TEMPERATURE

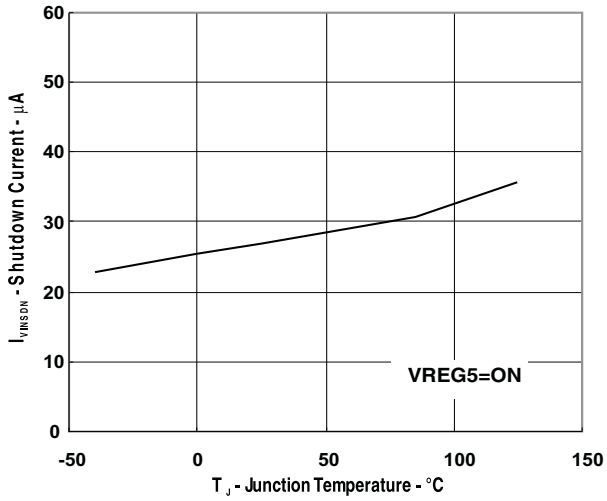

Figure 4.

TRIP SOURCE CURRENT vs JUNCTION TEMPERATURE

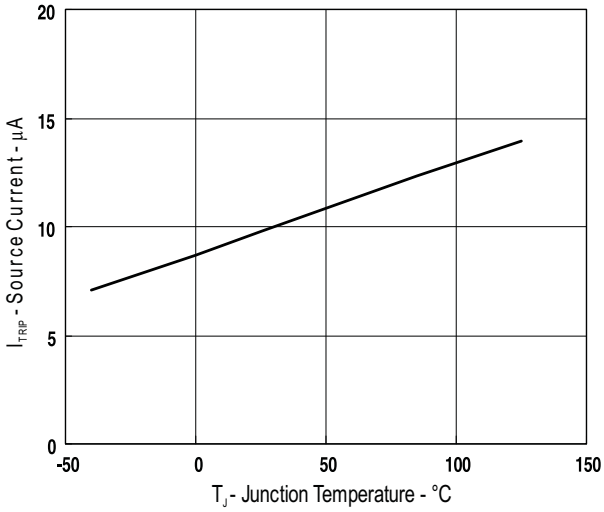

Figure 5.

VREG5 VOLTAGE vs JUNCTION TEMPERATURE

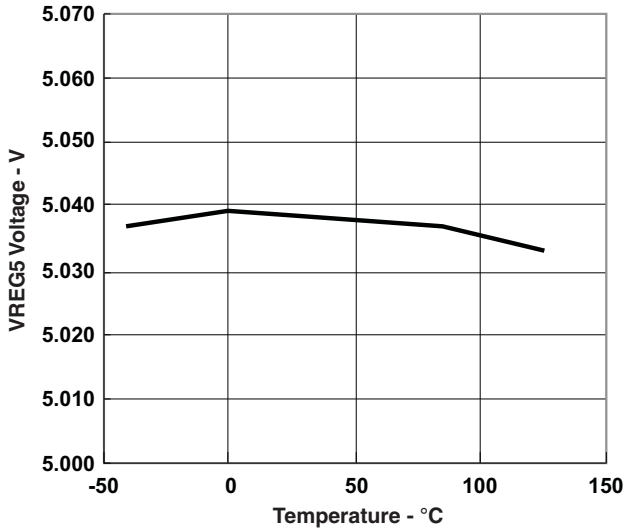

Figure .

TYPICAL CHARACTERISTICS (continued)

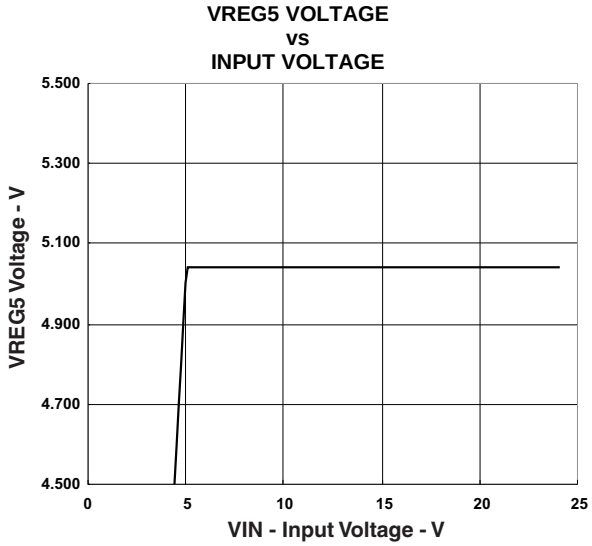

Figure 6.

TYPICAL APPLICATION PERFORMANCE

SWITCHING FREQUENCY (I_O1 = 3 A)
vs
INPUT VOLTAGE (CH1)

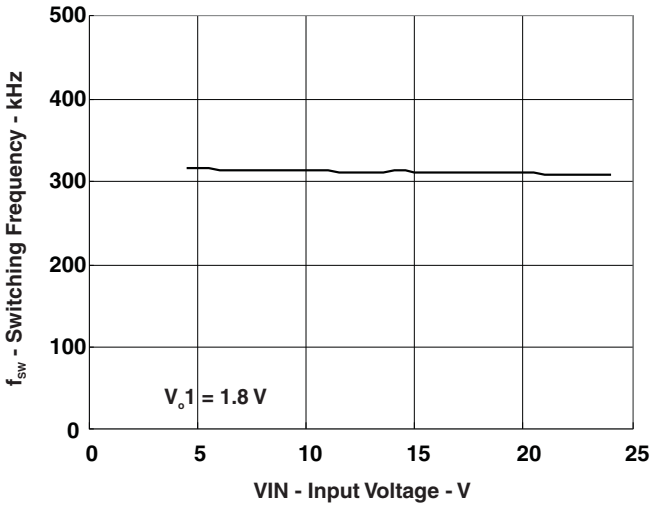

Figure 7.

SWITCHING FREQUENCY (I_O2 = 3 A)
vs
INPUT VOLTAGE (CH2)

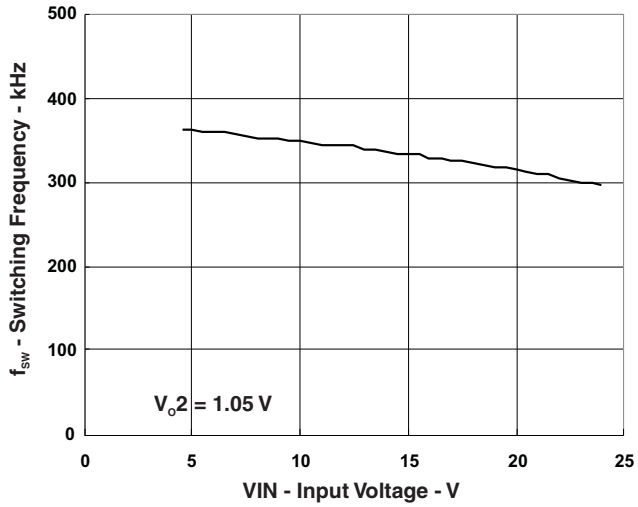

Figure 8.

SWITCHING FREQUENCY (VIN = 12 V)
vs
OUTPUT CURRENT (CH1)

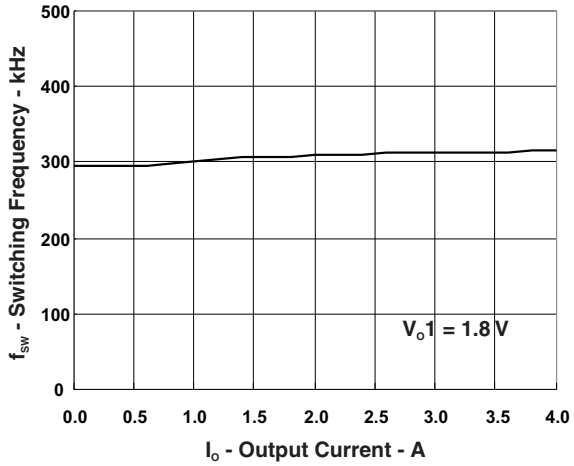

Figure 9.

SWITCHING FREQUENCY (VIN = 12 V)
vs
OUTPUT CURRENT (CH2)

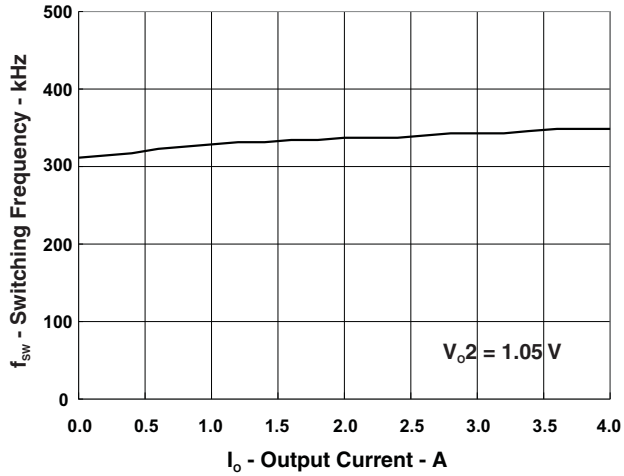

Figure 10.

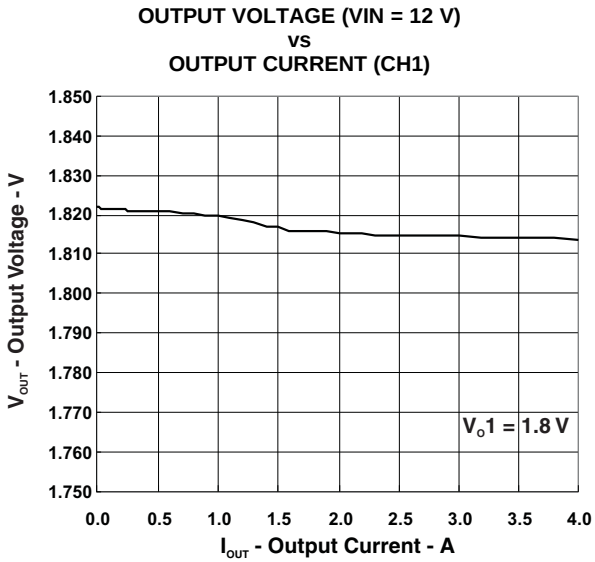

Figure 11.

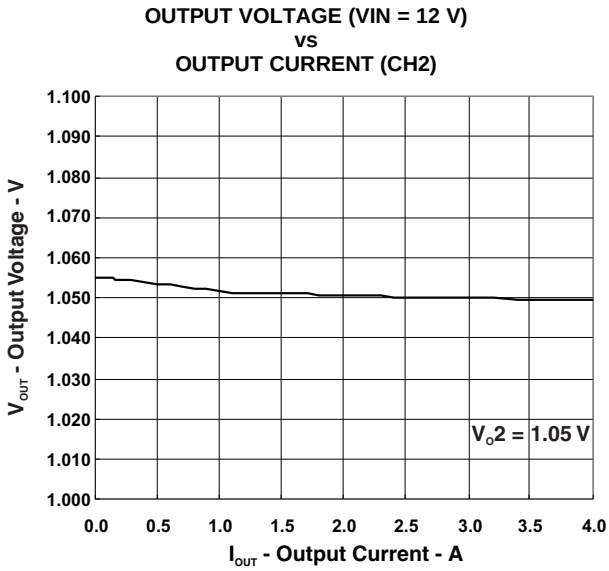

Figure 12.

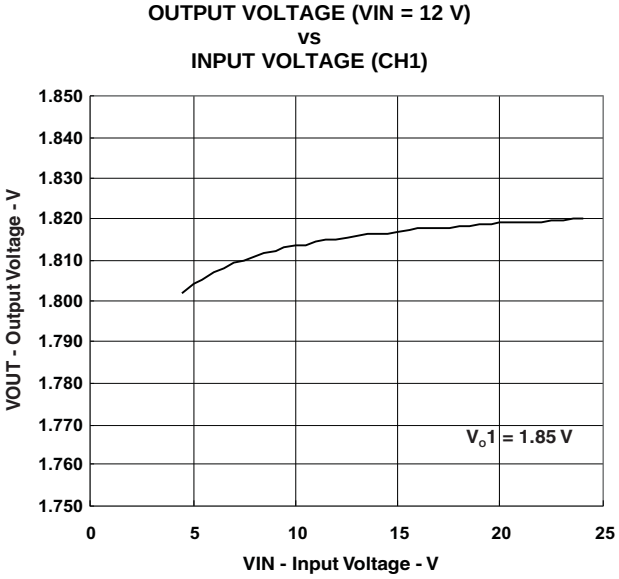

Figure 13.

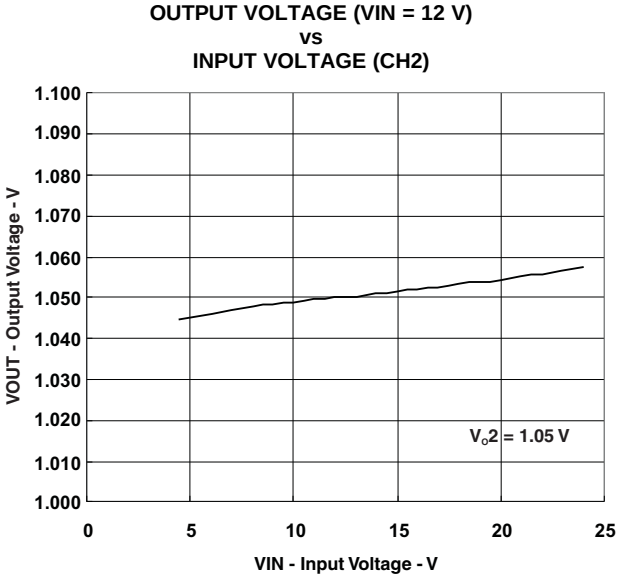

Figure 14.

LOAD TRANSIENT RESPONSE

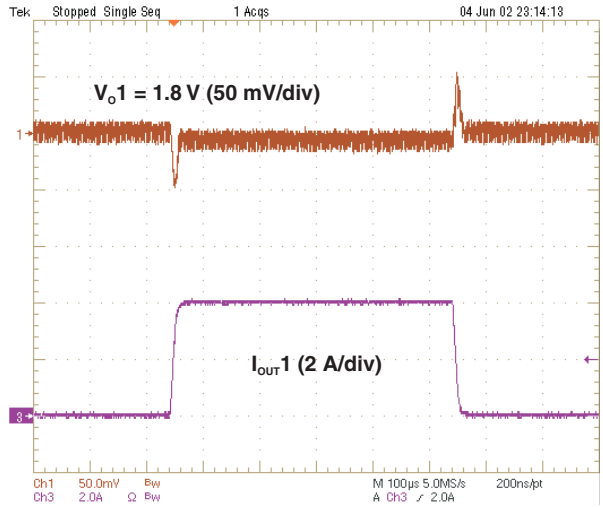

Figure 15.

LOAD TRANSIENT RESPONSE

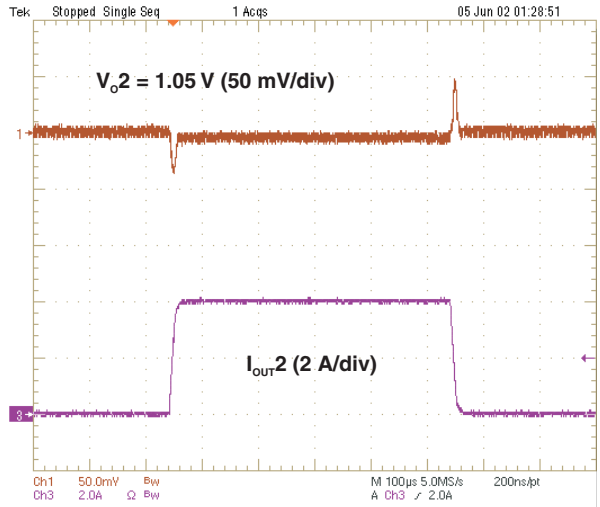

Figure 16.

START-UP WAVEFORMS

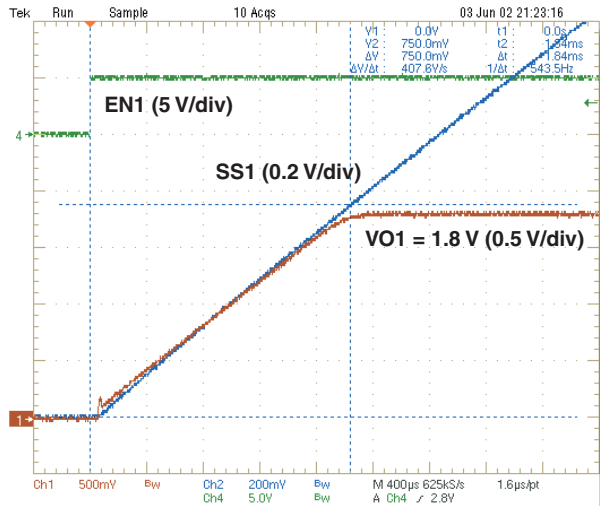

Figure 17.

START-UP WAVEFORMS

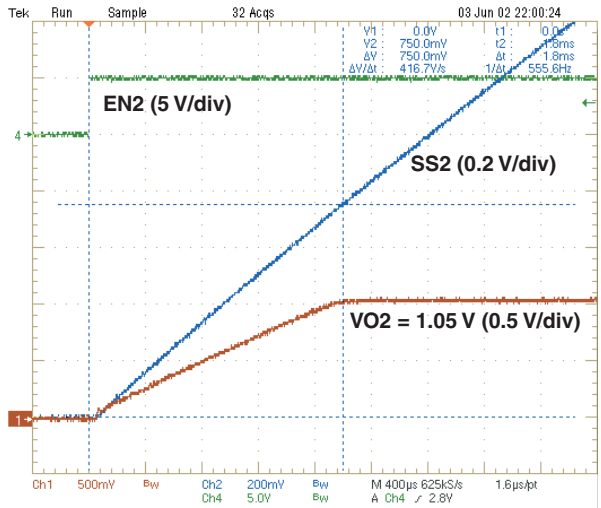

Figure 18.

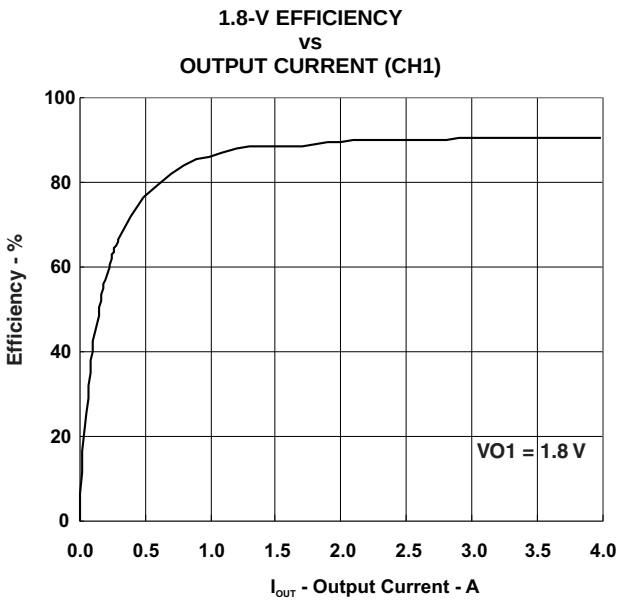

Figure 19.

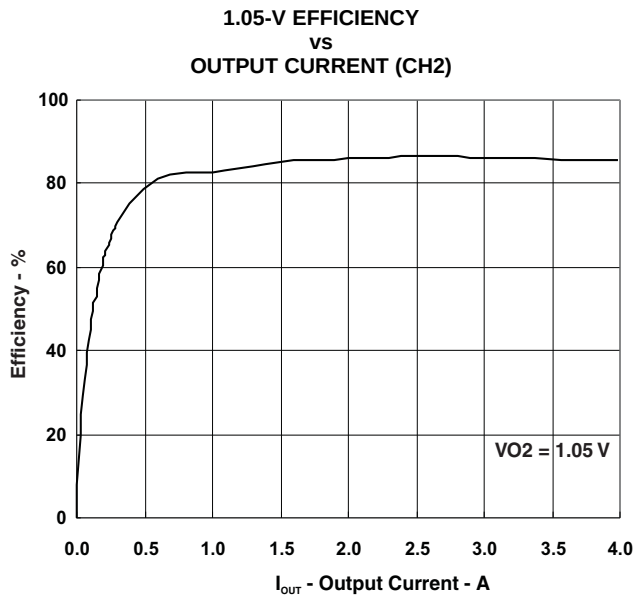

Figure 20.

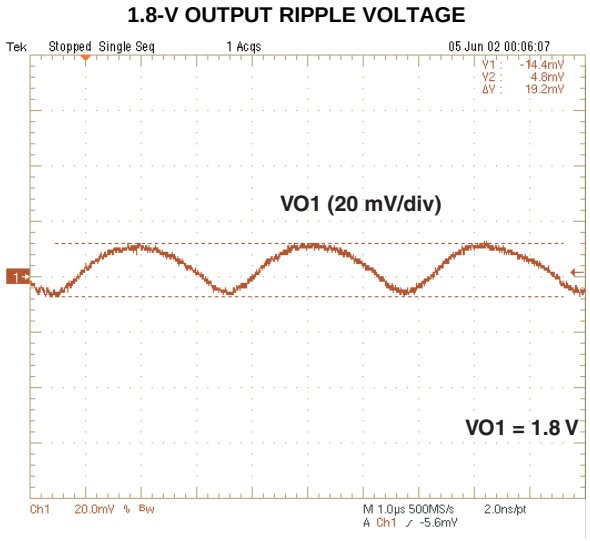

Figure 21.

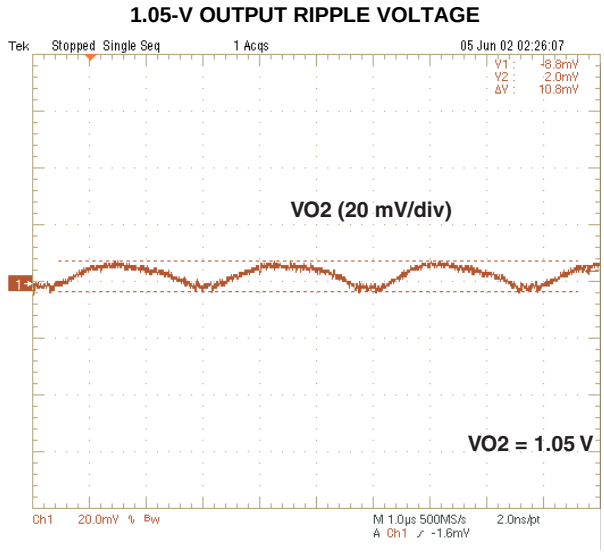

Figure 22.

APPLICATION INFORMATION

1. Choose inductor.

   The inductance value is selected to provide approximately 30% peak to peak ripple current at maximum load. Larger ripple current increases output ripple voltage, improve S/N ratio and contribute to stable operation.

   Equation 3 can be used to calculate L1.

$$L1 = \frac{(V_{IN(MAX)} - V_O1)}{I_{L1(RIPPLE)} \bullet f_{SW}} \bullet \frac{V_O1}{V_{IN(MAX)}} = \frac{(V_{IN(MAX)} - V_O1)}{0.3 \bullet I_O1 \bullet f_{SW}} \bullet \frac{V_o1}{V_{IN(MAX)}} \quad (3)$$

   The inductors current ratings needs to support both the RMS (thermal) current and the Peak (saturation) current. The RMS and peak inductor current can be estimated as follows.

$$I_{L1(RIPPLE)} = \frac{V_{IN(MAX)} - V_O1}{L1 \bullet f_{SW}} \bullet \frac{V_o1}{V_{IN(MAX)}} \quad (4)$$

$$I_{L1(PEAK)} = \frac{V_{TRIP}}{R_{DS(ON)}} + I_{L1(RIPPLE)} \quad (5)$$

$$I_{L1(RMS)} = \sqrt{I_O1^2 + \frac{1}{12}(I_{L1(RIPPLE)})^2} \quad (6)$$

   Note: The calculation above shall serve as a general reference. To further improve transient response, the output inductance could be reduced further. This needs to be considered along with the selection of the output capacitor.

2. Choose output capacitor.

   The capacitor value and ESR determines the amount of output voltage ripple and load transient response. it is recommended to use a ceramic output capacitor.

$$C1 = \frac{I_{L1(RIPPLE)}}{8 \bullet V_O1_{(RIPPLE)}} \bullet \frac{1}{f_{SW}} \quad (7)$$

$$C1 = \frac{\Delta I_{load}^2 \bullet L1}{2 \bullet V_O1 \bullet \Delta V_{OS}} \quad (8)$$

$$C1 = \frac{\Delta I_{load}^2 \bullet L1}{2 \bullet K \bullet \Delta V_{US}} \quad (9)$$

   Where

$$K = (V_{IN} - V_O1) \bullet \frac{T_{on}1}{T_{on}1 + T_{min(off)}} \quad (10)$$

   Select the capacitance value greater than the largest value calculated from Equation 7, Equation 8 and Equation 9. The capacitance for C1 should be greater than 66 µF.

   Where

   ΔV_{OS} = The allowable amount of overshoot voltage in load transition
   ΔV_{US} = The allowable amount of undershoot voltage in load transition
   $T_{min(off)}$ = Minimum off time

3. Choose input capacitor.

   The TPS53125 requires an input decoupling capacitor and a bulk capacitor is needed depending on the application. A minimum 10-µF high-quality ceramic capacitor is recommended for the input capacitor. The capacitor voltage rating needs to be greater than the maximum input voltage.

4. Choose bootstrap capacitor.

   The TPS53125 requires a bootstrap capacitor from SW to VBST to provide the floating supply for the high-side drivers. A minimum 0.1-µF high-quality ceramic capacitor is recommended. The voltage rating should be greater than 10 V.

5. Choose VREG5 and V5FILT capacitor.

   The TPS53125 requires both the VREG5 regulator and V5FILT input are bypassed. A minimum 4.7-µF high-quality ceramic capacitor must be connected between the VREG5 and GND for proper operation. A minimum 1-µF high-quality ceramic capacitor must be connected between the V5FILT and GND for proper operation. Both of these capacitors' voltage ratings should be greater than 10 V.

6. Choose output voltage divider resistors.

   The output voltage is set with a resistor divider from the output voltage node to the VFBx pin. It is recommended to use 1% tolerance or better resisters. Select R2 between 10 kΩ and 100 kΩ and use Equation 11 or Equation 12 to calculate R1.

$$V_{swinj} = (V_{IN} - V_O1 \bullet 0.5875) \bullet \left(\frac{1}{f_{SW}}\right) \bullet \left(\frac{V_O1}{V_{IN}}\right) \bullet 4975 \tag{11}$$

$$R1 = \left(\frac{V_O1}{V_{FB} + \frac{V_{FB(RIPPLE)} + V_{swinj}}{2}} - 1\right) \bullet R2 \tag{12}$$

Where

$V_{FB(RIPPLE)}$ = Ripple voltage at VFB

V_{swinj} = Ripple voltage at error comparator

7. Choose register setting for over current limit.

$$V_{TRIP} = \left(I_{OCL} - \frac{(V_{IN} - V_O)}{2 \bullet L1 \bullet f_{SW}} \bullet \frac{V_O}{V_{IN}}\right) \bullet R_{DS(ON)} \tag{13}$$

$$R_{TRIP}\,(k\Omega) = \frac{V_{TRIP}\,(mV) - V_{OCLoff}}{I_{TRIP(min)}\,(\mu A)} \tag{14}$$

Where

$R_{DS(ON)}$ = Low side FET on-resistance

$I_{TRIP(min)}$ = TRIP pin source current 8.5 µA

V_{OCL0ff} = Minimum over current limit offset voltage (–20 mV)

I_{OCL} = Over current limit

8. Choose soft start capacitor.

   Soft start time equation is as follows.

$$C_{SS} = \frac{T_{SS} \bullet I_{SSC}}{V_{FB}} \tag{15}$$

LAYOUT SUGGESTIONS

- Keep the input switching current loop as small as possible.
- Place the input capacitor (C3,C6) close to the top switching FET. The output current loop should also be kept as small as possible.
- Keep the SW node as physically small and short as possible as to minimize parasitic capacitance and inductance and to minimize radiated emissions. Kelvin connections should be brought from the output to the feedback pin (FBx) of the device.
- Keep analog and non-switching components away from switching components.
- Make a single point connection from the signal ground to power ground.
- Do not allow switching current to flow under the device.

PACKAGING INFORMATION

Orderable Device	Status [1]	Package Type	Package Drawing	Pins	Package Qty	Eco Plan [2]	Lead/Ball Finish	MSL Peak Temp [3]
TPS53125PW	ACTIVE	TSSOP	PW	24	60	Green (RoHS & no Sb/Br)	CU NIPDAU	Level-1-260C-UNLIM
TPS53125PWR	ACTIVE	TSSOP	PW	24	2000	Green (RoHS & no Sb/Br)	CU NIPDAU	Level-1-260C-UNLIM
TPS53125RGER	ACTIVE	VQFN	RGE	24	3000	Green (RoHS & no Sb/Br)	CU NIPDAU	Level-2-260C-1 YEAR
TPS53125RGET	ACTIVE	VQFN	RGE	24	250	Green (RoHS & no Sb/Br)	CU NIPDAU	Level-2-260C-1 YEAR

[1] The marketing status values are defined as follows:
ACTIVE: Product device recommended for new designs.
LIFEBUY: TI has announced that the device will be discontinued, and a lifetime-buy period is in effect.
NRND: Not recommended for new designs. Device is in production to support existing customers, but TI does not recommend using this part in a new design.
PREVIEW: Device has been announced but is not in production. Samples may or may not be available.
OBSOLETE: TI has discontinued the production of the device.

[2] Eco Plan - The planned eco-friendly classification: Pb-Free (RoHS), Pb-Free (RoHS Exempt), or Green (RoHS & no Sb/Br) - please check http://www.ti.com/productcontent for the latest availability information and additional product content details.
TBD: The Pb-Free/Green conversion plan has not been defined.
Pb-Free (RoHS): TI's terms "Lead-Free" or "Pb-Free" mean semiconductor products that are compatible with the current RoHS requirements for all 6 substances, including the requirement that lead not exceed 0.1% by weight in homogeneous materials. Where designed to be soldered at high temperatures, TI Pb-Free products are suitable for use in specified lead-free processes.
Pb-Free (RoHS Exempt): This component has a RoHS exemption for either 1) lead-based flip-chip solder bumps used between the die and package, or 2) lead-based die adhesive used between the die and leadframe. The component is otherwise considered Pb-Free (RoHS compatible) as defined above.
Green (RoHS & no Sb/Br): TI defines "Green" to mean Pb-Free (RoHS compatible), and free of Bromine (Br) and Antimony (Sb) based flame retardants (Br or Sb do not exceed 0.1% by weight in homogeneous material)

[3] MSL, Peak Temp. -- The Moisture Sensitivity Level rating according to the JEDEC industry standard classifications, and peak solder temperature.

TAPE AND REEL INFORMATION

REEL DIMENSIONS

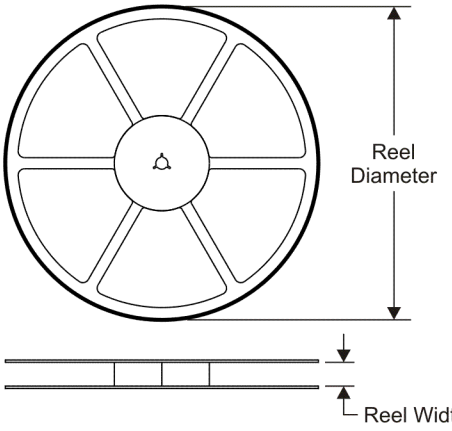

TAPE DIMENSIONS

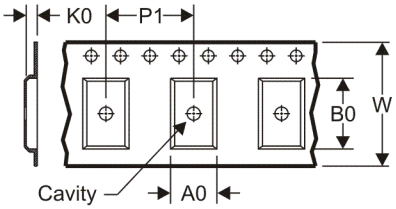

A0	Dimension designed to accommodate the component width
B0	Dimension designed to accommodate the component length
K0	Dimension designed to accommodate the component thickness
W	Overall width of the carrier tape
P1	Pitch between successive cavity centers

QUADRANT ASSIGNMENTS FOR PIN 1 ORIENTATION IN TAPE

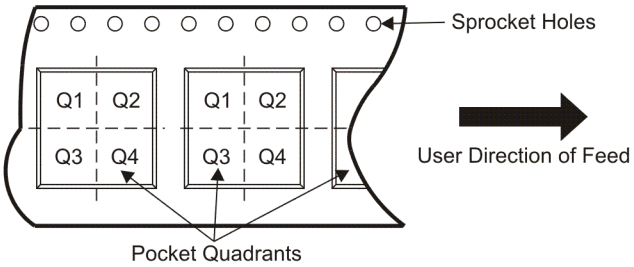

*All dimensions are nominal

Device	Package Type	Package Drawing	Pins	SPQ	Reel Diameter (mm)	Reel Width W1 (mm)	A0 (mm)	B0 (mm)	K0 (mm)	P1 (mm)	W (mm)	Pin1 Quadrant
TPS53125PWR	TSSOP	PW	24	2000	330.0	16.4	6.95	8.3	1.6	8.0	16.0	Q1
TPS53125RGER	VQFN	RGE	24	3000	330.0	12.4	4.25	4.25	1.15	8.0	12.0	Q2
TPS53125RGET	VQFN	RGE	24	250	180.0	12.4	4.25	4.25	1.15	8.0	12.0	Q2

TAPE AND REEL BOX DIMENSIONS

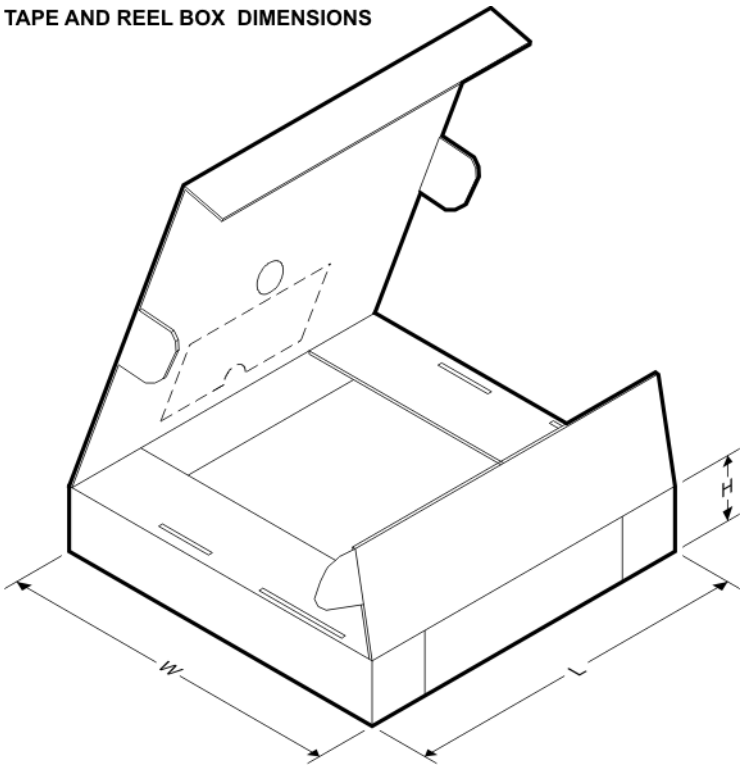

*All dimensions are nominal

Device	Package Type	Package Drawing	Pins	SPQ	Length (mm)	Width (mm)	Height (mm)
TPS53125PWR	TSSOP	PW	24	2000	346.0	346.0	33.0
TPS53125RGER	VQFN	RGE	24	3000	346.0	346.0	29.0
TPS53125RGET	VQFN	RGE	24	250	190.5	212.7	31.8

RGE (S-PVQFN-N24) PLASTIC QUAD FLATPACK NO-LEAD

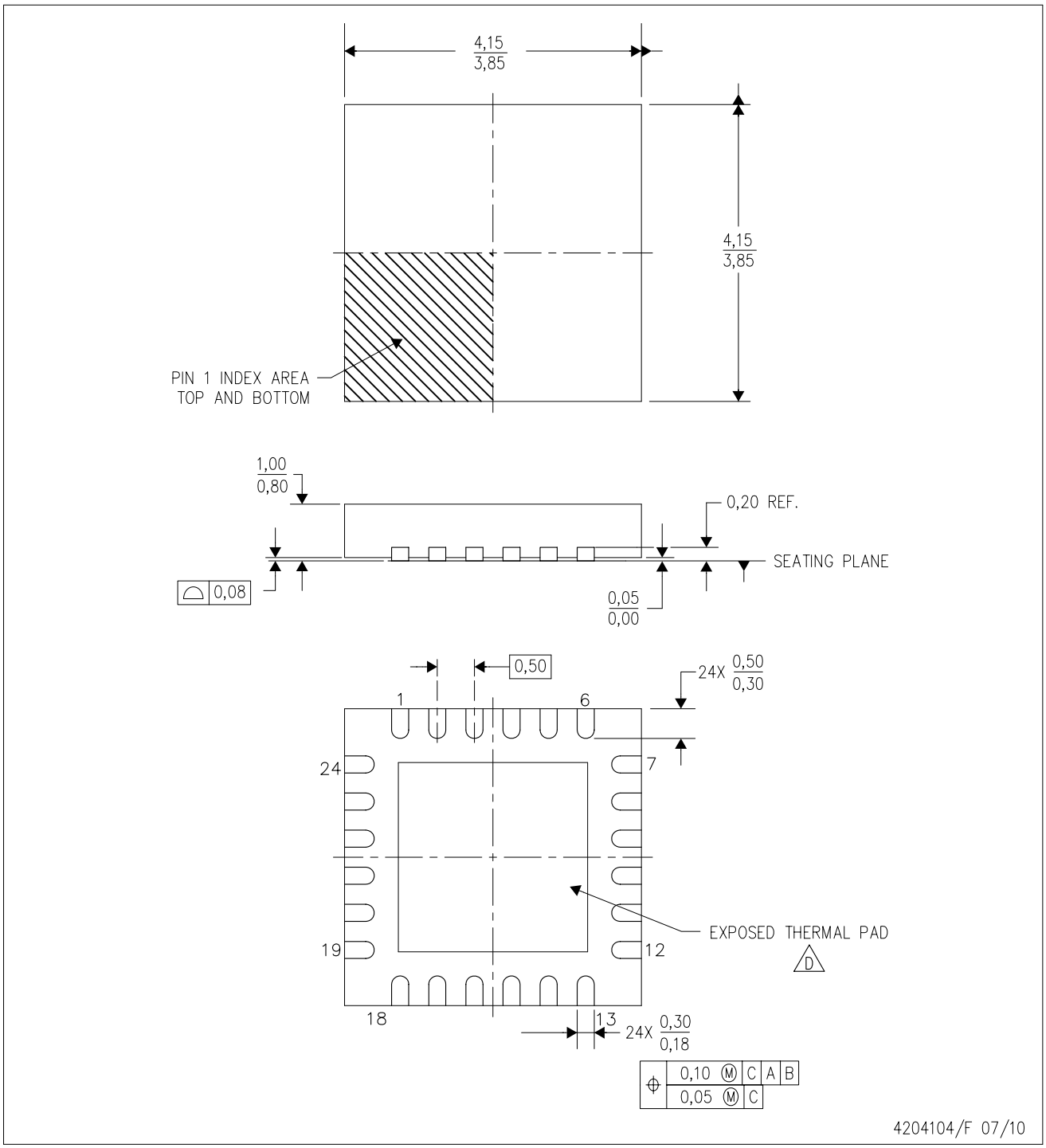

NOTES:
A. All linear dimensions are in millimeters. Dimensioning and tolerancing per ASME Y14.5M-1994.
B. This drawing is subject to change without notice.
C. Quad Flatpack, No-Leads (QFN) package configuration.
D. The package thermal pad must be soldered to the board for thermal and mechanical performance. See the Product Data Sheet for details regarding the exposed thermal pad dimensions.
E. Falls within JEDEC MO-220.

RGE (S-PVQFN-N24) PLASTIC QUAD FLATPACK NO-LEAD

THERMAL INFORMATION

This package incorporates an exposed thermal pad that is designed to be attached directly to an external heatsink. The thermal pad must be soldered directly to the printed circuit board (PCB). After soldering, the PCB can be used as a heatsink. In addition, through the use of thermal vias, the thermal pad can be attached directly to the appropriate copper plane shown in the electrical schematic for the device, or alternatively, can be attached to a special heatsink structure designed into the PCB. This design optimizes the heat transfer from the integrated circuit (IC).

For information on the Quad Flatpack No-Lead (QFN) package and its advantages, refer to Application Report, QFN/SON PCB Attachment, Texas Instruments Literature No. SLUA271. This document is available at www.ti.com.

The exposed thermal pad dimensions for this package are shown in the following illustration.

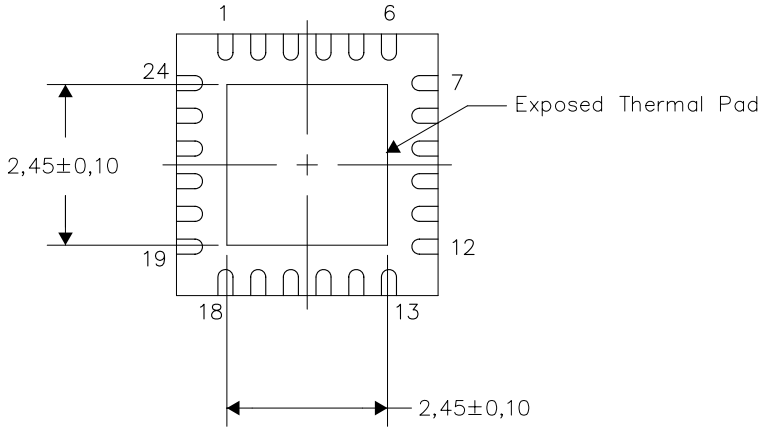

Bottom View

Exposed Thermal Pad Dimensions

4206344-3/V 11/10

NOTES: A. All linear dimensions are in millimeters

RGE (S-PVQFN-N24) PLASTIC QUAD FLATPACK NO-LEAD

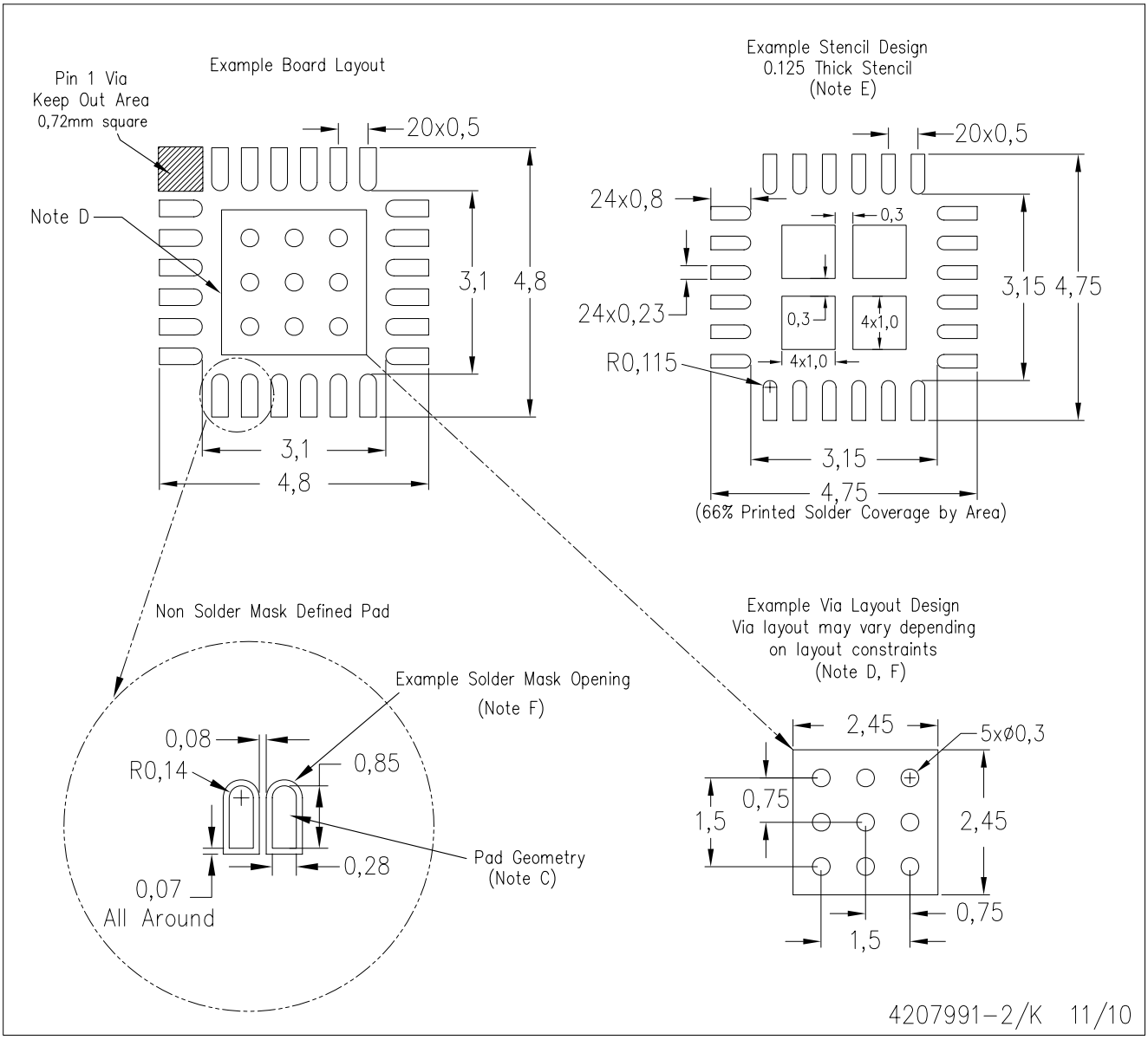

NOTES:
- A. All linear dimensions are in millimeters.
- B. This drawing is subject to change without notice.
- C. Publication IPC-7351 is recommended for alternate designs.
- D. This package is designed to be soldered to a thermal pad on the board. Refer to Application Note, Quad Flat-Pack Packages, Texas Instruments Literature No. SLUA271, and also the Product Data Sheets for specific thermal information, via requirements, and recommended board layout. These documents are available at www.ti.com <http://www.ti.com>.
- E. Laser cutting apertures with trapezoidal walls and also rounding corners will offer better paste release. Customers should contact their board assembly site for stencil design recommendations. Refer to IPC 7525 for stencil design considerations.
- F. Customers should contact their board fabrication site for recommended solder mask tolerances and via tenting recommendations for vias placed in the thermal pad.

PW (R-PDSO-G)** **PLASTIC SMALL-OUTLINE PACKAGE**

14 PINS SHOWN

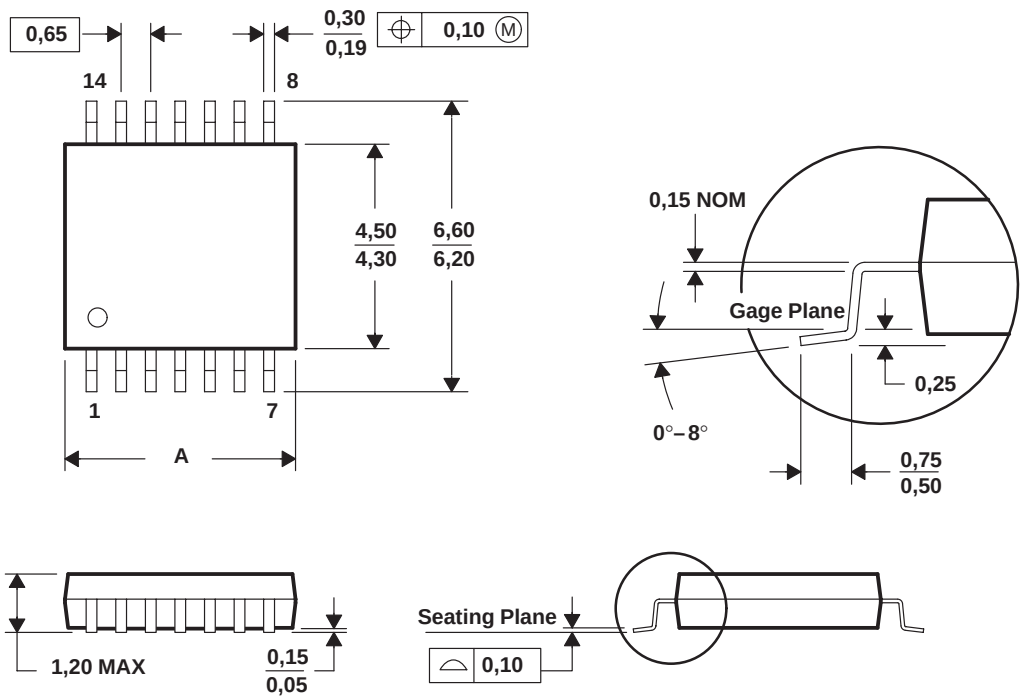

DIM \ PINS **	8	14	16	20	24	28
A MAX	3,10	5,10	5,10	6,60	7,90	9,80
A MIN	2,90	4,90	4,90	6,40	7,70	9,60

4040064/F 01/97

NOTES: A. All linear dimensions are in millimeters.
B. This drawing is subject to change without notice.
C. Body dimensions do not include mold flash or protrusion not to exceed 0,15.
D. Falls within JEDEC MO-153

IMPORTANT NOTICE

Texas Instruments Incorporated and its subsidiaries (TI) reserve the right to make corrections, modifications, enhancements, improvements, and other changes to its products and services at any time and to discontinue any product or service without notice. Customers should obtain the latest relevant information before placing orders and should verify that such information is current and complete. All products are sold subject to TI's terms and conditions of sale supplied at the time of order acknowledgment.

TI warrants performance of its hardware products to the specifications applicable at the time of sale in accordance with TI's standard warranty. Testing and other quality control techniques are used to the extent TI deems necessary to support this warranty. Except where mandated by government requirements, testing of all parameters of each product is not necessarily performed.

TI assumes no liability for applications assistance or customer product design. Customers are responsible for their products and applications using TI components. To minimize the risks associated with customer products and applications, customers should provide adequate design and operating safeguards.

TI does not warrant or represent that any license, either express or implied, is granted under any TI patent right, copyright, mask work right, or other TI intellectual property right relating to any combination, machine, or process in which TI products or services are used. Information published by TI regarding third-party products or services does not constitute a license from TI to use such products or services or a warranty or endorsement thereof. Use of such information may require a license from a third party under the patents or other intellectual property of the third party, or a license from TI under the patents or other intellectual property of TI.

Reproduction of TI information in TI data books or data sheets is permissible only if reproduction is without alteration and is accompanied by all associated warranties, conditions, limitations, and notices. Reproduction of this information with alteration is an unfair and deceptive business practice. TI is not responsible or liable for such altered documentation. Information of third parties may be subject to additional restrictions.

Resale of TI products or services with statements different from or beyond the parameters stated by TI for that product or service voids all express and any implied warranties for the associated TI product or service and is an unfair and deceptive business practice. TI is not responsible or liable for any such statements.

TI products are not authorized for use in safety-critical applications (such as life support) where a failure of the TI product would reasonably be expected to cause severe personal injury or death, unless officers of the parties have executed an agreement specifically governing such use. Buyers represent that they have all necessary expertise in the safety and regulatory ramifications of their applications, and acknowledge and agree that they are solely responsible for all legal, regulatory and safety-related requirements concerning their products and any use of TI products in such safety-critical applications, notwithstanding any applications-related information or support that may be provided by TI. Further, Buyers must fully indemnify TI and its representatives against any damages arising out of the use of TI products in such safety-critical applications.

TI products are neither designed nor intended for use in military/aerospace applications or environments unless the TI products are specifically designated by TI as military-grade or "enhanced plastic." Only products designated by TI as military-grade meet military specifications. Buyers acknowledge and agree that any such use of TI products which TI has not designated as military-grade is solely at the Buyer's risk, and that they are solely responsible for compliance with all legal and regulatory requirements in connection with such use.

TI products are neither designed nor intended for use in automotive applications or environments unless the specific TI products are designated by TI as compliant with ISO/TS 16949 requirements. Buyers acknowledge and agree that, if they use any non-designated products in automotive applications, TI will not be responsible for any failure to meet such requirements.

Following are URLs where you can obtain information on other Texas Instruments products and application solutions:

Products		**Applications**	
Amplifiers	amplifier.ti.com	Audio	www.ti.com/audio
Data Converters	dataconverter.ti.com	Automotive	www.ti.com/automotive
DLP® Products	www.dlp.com	Communications and Telecom	www.ti.com/communications
DSP	dsp.ti.com	Computers and Peripherals	www.ti.com/computers
Clocks and Timers	www.ti.com/clocks	Consumer Electronics	www.ti.com/consumer-apps
Interface	interface.ti.com	Energy	www.ti.com/energy
Logic	logic.ti.com	Industrial	www.ti.com/industrial
Power Mgmt	power.ti.com	Medical	www.ti.com/medical
Microcontrollers	microcontroller.ti.com	Security	www.ti.com/security
RFID	www.ti-rfid.com	Space, Avionics & Defense	www.ti.com/space-avionics-defense
RF/IF and ZigBee® Solutions	www.ti.com/lprf	Video and Imaging	www.ti.com/video
		Wireless	www.ti.com/wireless-apps

Mailing Address: Texas Instruments, Post Office Box 655303, Dallas, Texas 75265