MBR830 - MBR860

8.0A SCHOTTKY BARRIER RECTIFIER

Features

- Schottky Barrier Chip
- Guard Ring Die Construction for Transient Protection
- Low Power Loss, High Efficiency
- High Surge Capability
- High Current Capability and Low Forward Voltage Drop
- For Use in Low Voltage, High Frequency Inverters, Free Wheeling, and Polarity Protection Application
- Plastic Material: UL Flammability Classification Rating 94V-0

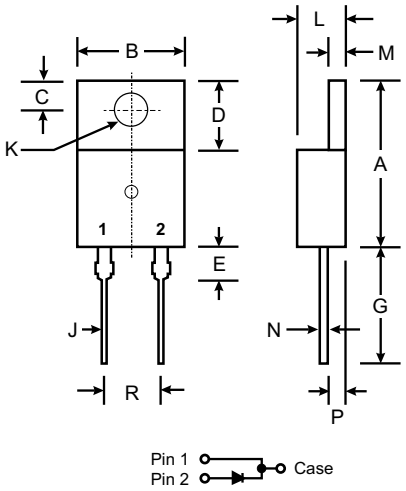

TO-220AC		
Dim	**Min**	**Max**
A	14.22	15.88
B	9.65	10.67
C	2.54	3.43
D	5.84	6.86
E	—	6.35
G	12.70	14.73
J	0.51	1.14
K	3.53∅	4.09∅
L	3.56	4.83
M	1.14	1.40
N	0.30	0.64
P	2.03	2.92
R	4.83	5.33
All Dimensions in mm		

Mechanical Data

- Case: Molded Plastic
- Terminals: Plated Leads Solderable per MIL-STD-202, Method 208
- Polarity: See Diagram
- Weight: 2.24 grams (approx.)
- Mounting Position: Any
- Marking: Type Number

Maximum Ratings and Electrical Characteristics

@ T_A = 25°C unless otherwise specified

Single phase, half wave, 60Hz, resistive or inductive load.
For capacitive load, derate current by 20%.

Characteristic	Symbol	MBR 830	MBR 835	MBR 840	MBR 845	MBR 850	MBR 860	Unit
Peak Repetitive Reverse Voltage Working Peak Reverse Voltage DC Blocking Voltage	V_{RRM} V_{RWM} V_R	30	35	40	45	50	60	V
RMS Reverse Voltage	$V_{R(RMS)}$	21	24.5	28	31.5	35	42	V
Average Rectified Output Current (Note 1) @ T_C = 125°C	I_O	8.0						A
Non-Repetitive Peak Forward Surge Current 8.3ms single half sine-wave superimposed on rated load (JEDEC Method)	I_{FSM}	150						A
Repetitive Peak Reverse Surge Current @ t ≤ 2.0µs	I_{RRM}	1.0						A
Forward Voltage Drop @ I_F = 8.0A, T_C = 125°C @ I_F = 8.0A, T_C = 25°C @ I_F = 16A, T_C = 25°C	V_{FM}	0.57 0.70 0.84				0.70 0.80 0.95		V
Peak Reverse Current @ T_C = 25°C at Rated DC Blocking Voltage @ T_C = 125°C	I_{RM}	0.1 15						mA
Typical Junction Capacitance (Note 2)	C_j	250						pF
Typical Thermal Resistance Junction to Case (Note 1)	$R_{\theta JC}$	3.0						K/W
Voltage Rate of Change (Rated V_R)	dV/dt	1000						V/µs
Operating and Storage Temperature Range	T_j, T_{STG}	-65 to +150						°C

Notes: 1. Thermal resistance junction to case mounted on heatsink.
2. Measured at 1.0MHz and applied reverse voltage of 4.0V DC.

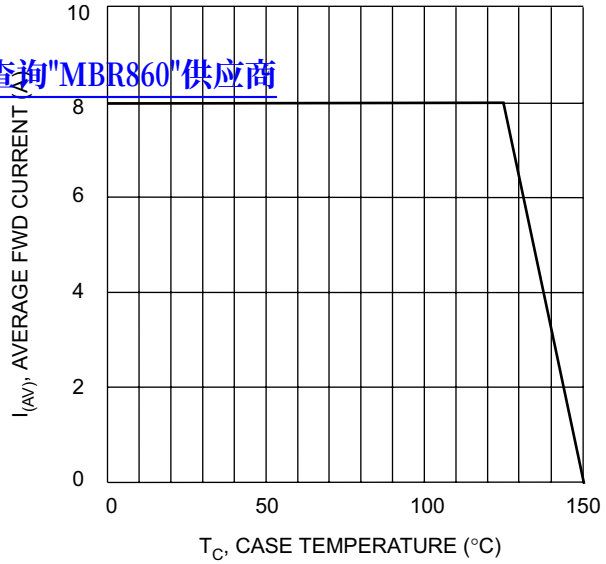

Fig. 1 Forward Current Derating Curve

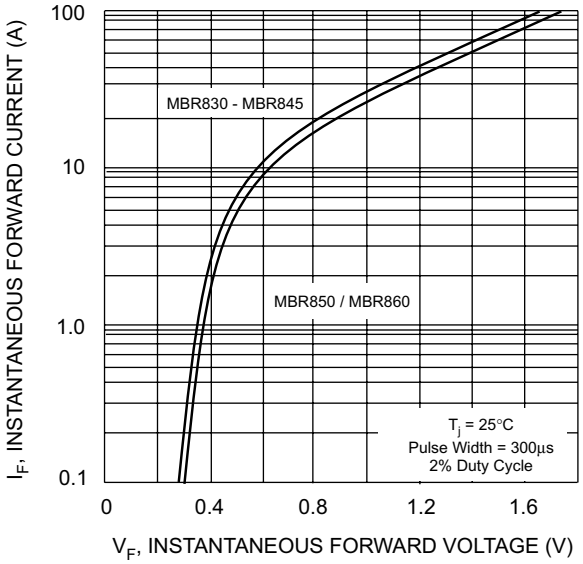

Fig. 2 Typical Forward Characteristics

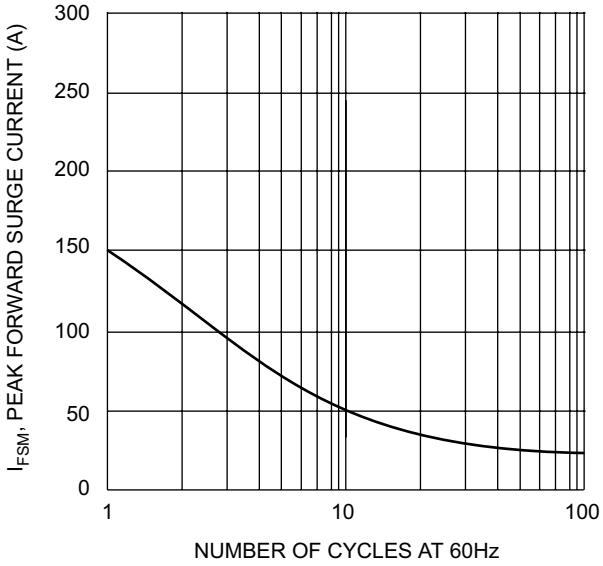

Fig. 3 Max Non-Repetitive Surge Current

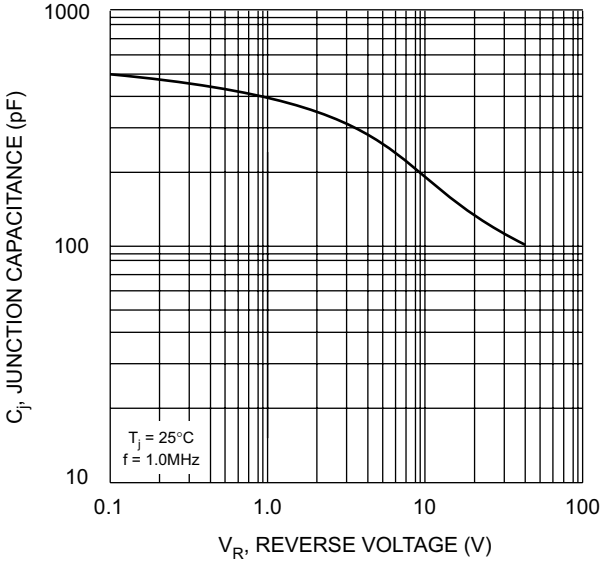

Fig. 4 Typical Junction Capacitance