| REVISIONS | | | |
|---|---|---|---|
| LTR | DESCRIPTION | DATE (YR-MO-DA) | APPROVED |
| F | Added device type 11. Added vendor cage code 0EU86 for device types 05 through 09. -sld | 99-09-07 | Raymond Monnin |

查询"5962-9559501HNA"供应商

| REV | | | | | | | | | | | | | | | | | | | | |
|---|---|---|---|---|---|---|---|---|---|---|---|---|---|---|---|---|---|---|---|---|
| SHEET | | | | | | | | | | | | | | | | | | | | |
| REV | F | F | F | F | F | F | F | F | F | F | F | F | F | F | F | F | | | | |
| SHEET | 15 | 16 | 17 | 18 | 19 | 20 | 21 | 22 | 23 | 24 | 25 | 26 | 27 | 28 | 29 | 30 | | | | |

| REV STATUS OF SHEETS | REV | F | F | F | F | F | F | F | F | F | F | F | F | F |
|---|---|---|---|---|---|---|---|---|---|---|---|---|---|---|
| | SHEET | 1 | 2 | 3 | 4 | 5 | 6 | 7 | 8 | 9 | 10 | 11 | 12 | 13 | 14 |

PMIC N/A

**STANDARD MICROCIRCUIT DRAWING**

THIS DRAWING IS AVAILABLE FOR USE BY ALL DEPARTMENTS AND AGENCIES OF THE DEPARTMENT OF DEFENSE

AMSC N/A

PREPARED BY
Steve L. Duncan

CHECKED BY
Michael Jones

APPROVED BY
Kendall A. Cottongim

DRAWING APPROVAL DATE
95-07-19

REVISION LEVEL
F

**DEFENSE SUPPLY CENTER COLUMBUS**
**COLUMBUS, OHIO 43216-5000**

MICROCIRCUIT, MEMORY, HYBRID, DIGITAL, STATIC RANDOM ACCESS MEMORY, CMOS, 128K X 32-BIT

| SIZE | CAGE CODE | |
|---|---|---|
| **A** | **67268** | **5962-95595** |

SHEET 1 OF 30

DSCC FORM 2233
APR 97

5962-E414-99

DISTRIBUTION STATEMENT A. Approved for public release; distribution is unlimited.

Powered by ICminer.com Electronic-Library Service CopyRight 2003

1. SCOPE

查询"5962-9559501HNA"供应商

1.1 Scope. This document defines five product assurance classes, class D (lowest reliability), class E, (exceptions), class G (lowered high reliability), class H (high reliability), and class K, (highest reliability) and a choice of case outlines and lead finishes are available and are reflected in the Part or Identifying Number (PIN). When available, a choice of radiation hardness assurance levels are reflected in the PIN.

1.2 PIN. The PIN shall be as shown in the following example:

| 5962 | - | 95595 | 01 | H | X | X |
|---|---|---|---|---|---|---|
| Federal stock class designator | RHA designator (see 1.2.1) | | Device type (see 1.2.2) | Device class designator (see 1.2.3) | Case outline (see 1.2.4) | Lead finish (see 1.2.5) |

Drawing number

1.2.1 Radiation hardness assurance (RHA) designator. RHA marked devices shall meet the MIL-PRF-38534 specified RHA levels and shall be marked with the appropriate RHA designator. A dash (-) indicates a non-RHA device.

1.2.2 Device type(s). The device type(s) shall identify the circuit function as follows:

| Device type | Generic number | Circuit function | Access time |
|---|---|---|---|
| 01 | WS-128K32-120Q | SRAM, 128K x 32-BIT | 120 ns |
| 02 | WS-128K32-100Q | SRAM, 128K x 32-BIT | 100 ns |
| 03 | WS-128K32-85Q | SRAM, 128K x 32-BIT | 85 ns |
| 04 | WS-128K32-70Q | SRAM, 128K x 32-BIT | 70 ns |
| 05 | WS-128K32-55Q,ACT-S128K32N-055Q, AS8S128K32Q-55 | SRAM, 128K x 32-BIT | 55 ns |
| 06 | WS-128K32-45Q,ACT-S128K32N-045Q, AS8S128K32Q-45 | SRAM, 128K x 32-BIT | 45 ns |
| 07 | WS-128K32-35Q,ACT-S128K32N-035Q, AS8S128K32Q-35 | SRAM, 128K x 32-BIT | 35 ns |
| 08 | WS-128K32-25Q,ACT-S128K32N-025Q, AS8S128K32Q-25 | SRAM, 128K x 32-BIT | 25 ns |
| 09 | WS-128K32-20Q,ACT-S128K32N-020Q, AS8S128K32Q-20 | SRAM, 128K x 32-BIT | 20 ns |
| 10 | WS-128K32-17Q,ACT-S128K32N-017Q | SRAM, 128K x 32-BIT | 17 ns |
| 11 | WS-128K32-15Q | SRAM, 128K x 32-BIT | 15 ns |

1.2.3 Device class designator. This device class designator shall be a single letter identifying the product assurance level as follows:

| Device class | Device requirements documentation |
|---|---|
| D, E, G, H or K | Certification and qualification to MIL-PRF-38534 |



Powered by ICminer.com Electronic-Library Service CopyRight 2003

1.2.4 Case outline(s). The case outline(s) shall be as designated in MIL-STD-1835 and as follows:

查询"5962-9559501HNA"供应商

| Outline letter | Descriptive designator | Terminals | Package style |
|---|---|---|---|
| M 1/ | See figure 1 | 68 | Ceramic, Quad Flatpack, single/dual cavity |
| N | See figure 1 | 68 | Co-fired ceramic, single cavity, ultra low profile, quad flat pack |
| X | See figure 1 | 68 | Ceramic, Quad Flatpack |
| Y | See figure 1 | 68 | Ceramic, Quad Flatpack, Low profile |
| Z | See figure 1 | 68 | Ceramic, Quad Flatpack, dual cavity |

1.2.5 Lead finish. The lead finish shall be as specified in MIL-PRF-38534.

1.3 Absolute maximum ratings. 2/

| | |
|---|---|
| Supply voltage range ($V_{CC}$) | -0.5 V dc to +7.0 V dc |
| Signal voltage range (any pin) | -0.5 V dc to +7.0 V dc |
| Power dissipation ($P_D$): | |
| Device types 01 through 08 | 2.75W max |
| Device types 09 through 11 | 3.30W max |
| Thermal resistance junction-to-case ($\theta_{JC}$): | |
| Case outlines X and Y | 6.6°C/W |
| Case outline M | 10°C/W |
| Case outline N | 2.72°C/W |
| Case outline Z | 8°C/W |
| Storage temperature | -65°C to +150°C |
| Lead temperature (soldering, 10 seconds) | +300°C |

1.4 Recommended operating conditions.

| | |
|---|---|
| Supply voltage ($V_{CC}$) | +4.5 V dc to +5.5 V dc |
| Input low voltage range ($V_{IL}$) | -0.3 V dc to +0.8 V dc |
| Input high voltage range ($V_{IH}$) | +2.2 V dc to $V_{CC}$ +0.5 V dc |
| Output low voltage, maximum ($V_{OL}$) | +0.4 V dc |
| Output high voltage, minimum ($V_{OH}$) | +2.4 V dc |
| Case operating temperature range ($T_C$) | -55°C to +125°C |

2. APPLICABLE DOCUMENTS

2.1 Government specification, standards, and handbooks. The following specification, standards, and handbooks form a part of this drawing to the extent specified herein. Unless otherwise specified, the issues of these documents are those listed in the issue of the Department of Defense Index of Specifications and Standards (DoDISS) and supplement thereto, cited in the solitation.

SPECIFICATION

DEPARTMENT OF DEFENSE

MIL-PRF-38534 - Hybrid Microcircuits, General Specification for.

---

1/ The case outline M is available in either a single or dual cavity package.
2/ Stresses above the absolute maximum rating may cause permanent damage to the device. Extended operation at the maximum levels may degrade performance and affect reliability.



Powered by ICminer.com Electronic-Library Service CopyRight 2003

STANDARDS

查询"5962-95595"供应商 CHINA

DEPARTMENT OF DEFENSE

MIL-STD-883 - Test Method Standard Microcircuits.
MIL-STD-973 - Configuration Management.
MIL-STD-1835 - Interface for Microcircuit Case Outlines.

HANDBOOKS

DEPARTMENT OF DEFENSE

MIL-HDBK-103 - List of Standrard Microcircuit Drawings (SMD's).
MIL-HDBK-780 - Standard Microcircuit Drawings.

(Unless otherwise indicated, copies of the specification, standards, and handbooks are available from the Standardization Document Order Desk, 700 Robbins Avenue, Building 4D, Philadelphia, PA 19111-5094.)

2.2 Order of precedence. In the event of a conflict between the text of this drawing and the references cited herein, the text of this drawing shall take precedence. Nothing in this document , however, supercedes applicable laws and regulations unless a specific exemption has been obtained.

3. REQUIREMENTS

3.1 Item requirements. The individual item performance requirements for device classes D, E, G, H, and K shall be in accordance with MIL-PRF-38534. Compliance with MIL-PRF-38534 may include the performance of all tests herein or as designated in the device manufacturer's Quality Management (QM) plan or as designated for the applicable device class. Therefore, the tests and inspections herein may not be performed for the applicable device class (see MIL-PRF-38534). Furthermore, the manufacturer may take exceptions or use alternate methods to the tests and inspections herein and not perform them. However, the performance requirements as defined in MIL-PRF-38534 shall be met for the applicable device class.

3.2 Design, construction, and physical dimensions. The design, construction, and physical dimensions shall be as specified in MIL-PRF-38534 and herein.

3.2.1 Case outline(s). The case outline(s) shall be in accordance with 1.2.4 herein and figure 1.

3.2.2 Terminal connections. The terminal connections shall be as specified on figure 2.

3.2.3 Truth table(s). The truth table(s) shall be as specified on figure 3.

3.2.4 Timing diagram(s). The timing diagram(s) shall be as specified on figure 4 and 5.

3.2.5 Block diagram(s). The block diagram(s) shall be as specified on figure 6.

3.2.6 Output load circuit. The output load circuit shall be as specified on figure 7.

3.3 Electrical performance characteristics. Unless otherwise specified herein, the electrical performance characteristics are as specified in table I and shall apply over the full specified operating temperature range.

3.4 Electrical test requirements. The electrical test requirements shall be the subgroups specified in table II. The electrical tests for each subgroup are described in table I.

3.5 Marking of Device(s). Marking of device(s) shall be in accordance with MIL-PRF-38534. The device shall be marked with the PIN listed in 1.2 herein. In addition, the manufacturer's vendor similar PIN may also be marked.

3.6 Data. In addition to the general performance requirements of MIL-PRF-38534, the manufacturer of the device described herein shall maintain the electrical test data (variables format) from the initial quality conformance inspection group A lot sample, for each device type listed herein. Also, the data should include a summary of all parameters manually tested, and for those which, if any, are guaranteed. This data shall be maintained under document revision level control by the manufacturer and be made available to the preparing activity (DSCC-VA) upon request.



Powered by ICminer.com Electronic-Library Service CopyRight 2003

TABLE I. Electrical performance characteristics.

查询"5962-9559501HNA"供应商

| Test | Symbol | Conditions 1/ $-55°C \le T_C \le +125°C$ $V_{SS} = 0$ V dc $+4.5$ V dc $\le V_{CC} \le +5.5$ V dc unless otherwise specified | Group A subgroups | Device types | Limits Min | Limits Max | Unit |
|---|---|---|---|---|---|---|---|
| DC PARAMETERS | | | | | | | |
| Supply current 32-bit mode | $I_{CC32}$ | $\overline{CS} = V_{IL}$, $\overline{OE} = V_{IH}$, f = 5 MHz CMOS compatible $V_{CC} = +5.5$ V | 1,2,3 | 01,02<br>03,04<br>05-11 | | 120<br>120<br>600 | mA |
| Standby current | $I_{SB}$ | $\overline{CS} = \overline{OE} = V_{IH}$, f = 5 MHz CMOS compatible $V_{CC} = +5.5$ V | 1,2,3 | 01,02<br>03,04<br>05-08<br>09-11 | | 2.4<br>5.0<br>60<br>80 | mA |
| Input Leakage current | $I_{LI}$ | $V_{CC} = +5.5$ V $V_{IN}$ = GND or $V_{CC}$ | 1,2,3 | All | | 10 | µA |
| Output Leakage | $I_{LO}$ | $\overline{CS} = V_{IH}$, $\overline{OE} = V_{IH}$, $V_{OUT}$ = GND or $V_{CC}$ | 1,2,3 | All | | 10 | µA |
| Output low voltage | $V_{OL}$ | $V_{CC} = +4.5$ V, $I_{OL} = +2.1$ mA | 1,2,3 | 01-07 | | 0.4 | V |
| | | $V_{CC} = +4.5$ V, $I_{OL} = +8.0$ mA | | 08-11 | | 0.4 | |
| Output high voltage | $V_{OH}$ | $V_{CC} = +4.5$ V, $I_{OH} = -1.0$ mA | 1,2,3 | 01-07 | 2.4 | | V |
| | | $V_{CC} = +4.5$ V, $I_{OH} = -4.0$ mA | | 08-11 | 2.4 | | |

See footnotes at end of table.



Powered by ICminer.com Electronic-Library Service CopyRight 2003

TABLE I. Electrical performance characteristics - Continued.

查询"5962-9559501HNA"供应商

| Test | Symbol | Conditions 1/ $-55°C \le T_C \le +125°C$ $V_{SS} = 0$ V dc $+4.5$ V dc $\le V_{CC} \le +5.5$ V dc unless otherwise specified | Group A subgroups | Device types | Limits Min | Limits Max | Unit |
|---|---|---|---|---|---|---|---|
| DATA RETENTION | | | | | | | |
| Data retention supply voltage | $V_{DR}$ | $\overline{CS} \ge V_{CC} - 0.2$ V | 1,2,3 | All | 2.0 | 5.5 | V |
| Data retention current | $I_{CCDR1}$ | $V_{CC} = +3.0$ V | 1,2,3 | 01-04<br>05-11 | | 1.6<br>11.6 | mA |
| CAPACITANCE | | | | | | | |
| $\overline{OE}$ capacitance 2/ | $C_{OE}$ | $V_{IN} = 0$ V, f = 1.0 MHz, $T_A = +25°$ C | 4 | All | | 50 | pF |
| $\overline{WE}$ capacitance 2/ | $C_{WE}$ | $V_{IN} = 0$ V, f = 1.0 MHz, $T_A = +25°$ C, Case outlines X and Y | 4 | All | | 50 | pF |
| | | $V_{IN} = 0$ V, f = 1.0 MHz, $T_A = +25°$ C, Case outline M, N, and Z | | All | | 20 | |
| $\overline{CS}$ 1-4 capacitance 2/ | $C_{CS}$ | $V_{IN} = 0$ V, f = 1.0 MHz $T_A = +25°$ C | 4 | All | | 20 | pF |
| D0 - D31 capacitance 2/ | $C_{I/O}$ | $V_{I/O} = 0$ V, f = 1.0 MHz, $T_A = +25°$ C | 4 | All | | 20 | pF |
| A0 - A16 capacitance 2/ | $C_{AD}$ | $V_{IN} = 0$ V, f = 1.0 MHz $T_A = +25°$ C | 4 | All | | 50 | pF |
| FUNCTIONAL TESTING | | | | | | | |
| Functional tests | | See 4.3.1c | 7,8A,8B | | | | |

See footnotes at end of table.



Powered by ICminer.com Electronic-Library Service CopyRight 2003

TABLE I. Electrical performance characteristics - Continued.

查询"5962-9559501HNA"供应商

| Test | Symbol | Conditions 1/ $-55°C \le T_C \le +125°C$ $V_{SS} = 0$ V dc $+4.5$ V dc $\le V_{CC} \le +5.5$ V dc unless otherwise specified | Group A subgroups | Device types | Limits Min | Limits Max | Unit |
|---|---|---|---|---|---|---|---|
| READ CYCLE AC TIMING | | | | | | | |
| Read cycle time | $t_{RC}$ | See figure 4 | 9,10,11 | 01 | 120 | | ns |
| | | | | 02 | 100 | | |
| | | | | 03 | 85 | | |
| | | | | 04 | 70 | | |
| | | | | 05 | 55 | | |
| | | | | 06 | 45 | | |
| | | | | 07 | 35 | | |
| | | | | 08 | 25 | | |
| | | | | 09 | 20 | | |
| | | | | 10 | 17 | | |
| | | | | 11 | 15 | | |
| Address access time | $t_{AA}$ | See figure 4 | 9,10,11 | 01 | | 120 | ns |
| | | | | 02 | | 100 | |
| | | | | 03 | | 85 | |
| | | | | 04 | | 70 | |
| | | | | 05 | | 55 | |
| | | | | 06 | | 45 | |
| | | | | 07 | | 35 | |
| | | | | 08 | | 25 | |
| | | | | 09 | | 20 | |
| | | | | 10 | | 17 | |
| | | | | 11 | | 15 | |
| Output hold from address change | $t_{OH}$ | See figure 4 | 9,10,11 | 01-04 | 5 | | ns |
| | | | | 05-11 | 0 | | |
| Chip select access time | $t_{ACS}$ | See figure 4 | 9,10,11 | 01 | | 120 | ns |
| | | | | 02 | | 100 | |
| | | | | 03 | | 85 | |
| | | | | 04 | | 70 | |
| | | | | 05 | | 55 | |
| | | | | 06 | | 45 | |
| | | | | 07 | | 35 | |
| | | | | 08 | | 25 | |
| | | | | 09 | | 20 | |
| | | | | 10 | | 17 | |
| | | | | 11 | | 15 | |

See footnotes at end of table.



Powered by ICminer.com Electronic-Library Service CopyRight 2003

TABLE I. Electrical performance characteristics - Continued.

查询"5962-9559501HNA"供应商

| Test | Symbol | Conditions 1/ $-55°C \le T_C \le +125°C$ $V_{SS} = 0$ V dc $+4.5$ V dc $\le V_{CC} \le +5.5$ V dc unless otherwise specified | Group A subgroups | Device types | Limits Min | Limits Max | Unit |
|---|---|---|---|---|---|---|---|
| READ CYCLE AC TIMING - CONTINUED | | | | | | | |
| Output enable to output valid | $t_{OE}$ | See figure 4 | 9,10,11 | 01 | | 60 | ns |
| | | | | 02 | | 50 | |
| | | | | 03 | | 45 | |
| | | | | 04 | | 35 | |
| | | | | 05 | | 30 | |
| | | | | 06 | | 25 | |
| | | | | 07 | | 20 | |
| | | | | 08 | | 15 | |
| | | | | 09 | | 12 | |
| | | | | 10,11 | | 10 | |
| WRITE CYCLE AC TIMING | | | | | | | |
| Write cycle time | $t_{WC}$ | See figure 5 | 9,10,11 | 01 | 120 | | ns |
| | | | | 02 | 100 | | |
| | | | | 03 | 85 | | |
| | | | | 04 | 70 | | |
| | | | | 05 | 55 | | |
| | | | | 06 | 45 | | |
| | | | | 07 | 35 | | |
| | | | | 08 | 25 | | |
| | | | | 09 | 20 | | |
| | | | | 10 | 17 | | |
| | | | | 11 | 15 | | |
| Chip select to end of write | $t_{CW}$ | See figure 5 | 9,10,11 | 01 | 100 | | ns |
| | | | | 02 | 80 | | |
| | | | | 03 | 75 | | |
| | | | | 04 | 60 | | |
| | | | | 05 | 45 | | |
| | | | | 06 | 30 | | |
| | | | | 07 | 25 | | |
| | | | | 08 | 20 | | |
| | | | | 09 | 15 | | |
| | | | | 10,11 | 14 | | |

See footnotes at end of table.



Powered by ICminer.com Electronic-Library Service CopyRight 2003

TABLE I. Electrical performance characteristics- Continued.

查询"5962-9559501HNA"供应商

| Test | Symbol | Conditions 1/ $-55°C \le T_C \le +125°C$ $V_{SS} = 0$ V dc $+4.5$ V dc $\le V_{CC} \le +5.5$ V dc unless otherwise specified | Group A subgroups | Device types | Limits Min | Limits Max | Unit |
|---|---|---|---|---|---|---|---|
| WRITE CYCLE AC TIMING - CONTINUED | | | | | | | |
| Address select to end of write | $t_{AW}$ | See figure 5 | 9,10,11 | 01 | 100 | | ns |
| | | | | 02 | 80 | | |
| | | | | 03 | 75 | | |
| | | | | 04 | 60 | | |
| | | | | 05 | 45 | | |
| | | | | 06 | 30 | | |
| | | | | 07 | 25 | | |
| | | | | 08 | 20 | | |
| | | | | 09,10 | 15 | | |
| | | | | 11 | 14 | | |
| Data valid to end of write | $t_{DW}$ | See figure 5 | 9,10,11 | 01 | 50 | | ns |
| | | | | 02 | 40 | | |
| | | | | 03 | 35 | | |
| | | | | 04 | 30 | | |
| | | | | 05 | 25 | | |
| | | | | 06 | 25 | | |
| | | | | 07 | 20 | | |
| | | | | 08 | 15 | | |
| | | | | 09 | 12 | | |
| | | | | 10,11 | 10 | | |
| Address setup time | $t_{AS}$ | See figure 5 | 9,10,11 | 01-04 | 5 | | ns |
| | | | | 05-11 | 0 | | |
| Write pulse width | $t_{WP}$ | See figure 5 | 9,10,11 | 01 | 80 | | ns |
| | | | | 02 | 70 | | |
| | | | | 03 | 55 | | |
| | | | | 04 | 50 | | |
| | | | | 05 | 45 | | |
| | | | | 06 | 30 | | |
| | | | | 07 | 25 | | |
| | | | | 08 | 20 | | |
| | | | | 09 | 15 | | |
| | | | | 10,11 | 14 | | |
| Address hold time | $t_{AH}$ | See figure 5 | 9,10,11 | 01-04 | 5 | | ns |
| | | | | 05-11 | 0 | | |

See footnotes at end of table.



Powered by ICminer.com Electronic-Library Service CopyRight 2003

TABLE I. Electrical performance characteristics- Continued.

查询"5962-9559501HNA"供应商

| Test | Symbol | Conditions 1/ $-55°C \le T_C \le +125°C$ $V_{SS} = 0$ V dc $+4.5$ V dc $\le V_{CC} \le +5.5$ V dc unless otherwise specified | Group A subgroups | Device types | Limits | | Unit |
|---|---|---|---|---|---|---|---|
| | | | | | Min | Max | |
| Output active from end of write | $t_{OW}$ | See figure 5 | 9,10,11 | 01-04<br>05-07<br>08-11 | 5<br>4<br>3 | | ns |
| Data hold time | $t_{DH}$ | See figure 5 | 9,10,11 | All | 0 | | ns |

1/ Unless otherwise specified, the AC test conditions are as follows:

Input pulse levels: $V_{IL} = 0$ V and $V_{IH} = 3.0$ V
Input rise and fall times: 5 nanoseconds
Input and output timing reference levels: 1.5 V, ± 0.5 V
Output loading: See figure 7

Unless otherwise specified, the DC test conditions are as follows:
$V_{IL} = 0.3$ V and $V_{IH} = V_{CC} - 0.3$ V

2/ Parameters shall be tested as part of device initial characterization and after any design or process changes which may affect these parameters. Parameters shall be guaranteed to the limits specified in table I for all lots not specifically tested.



Powered by ICminer.com Electronic-Library Service CopyRight 2003

查询"5962-9559501HNA"供应商

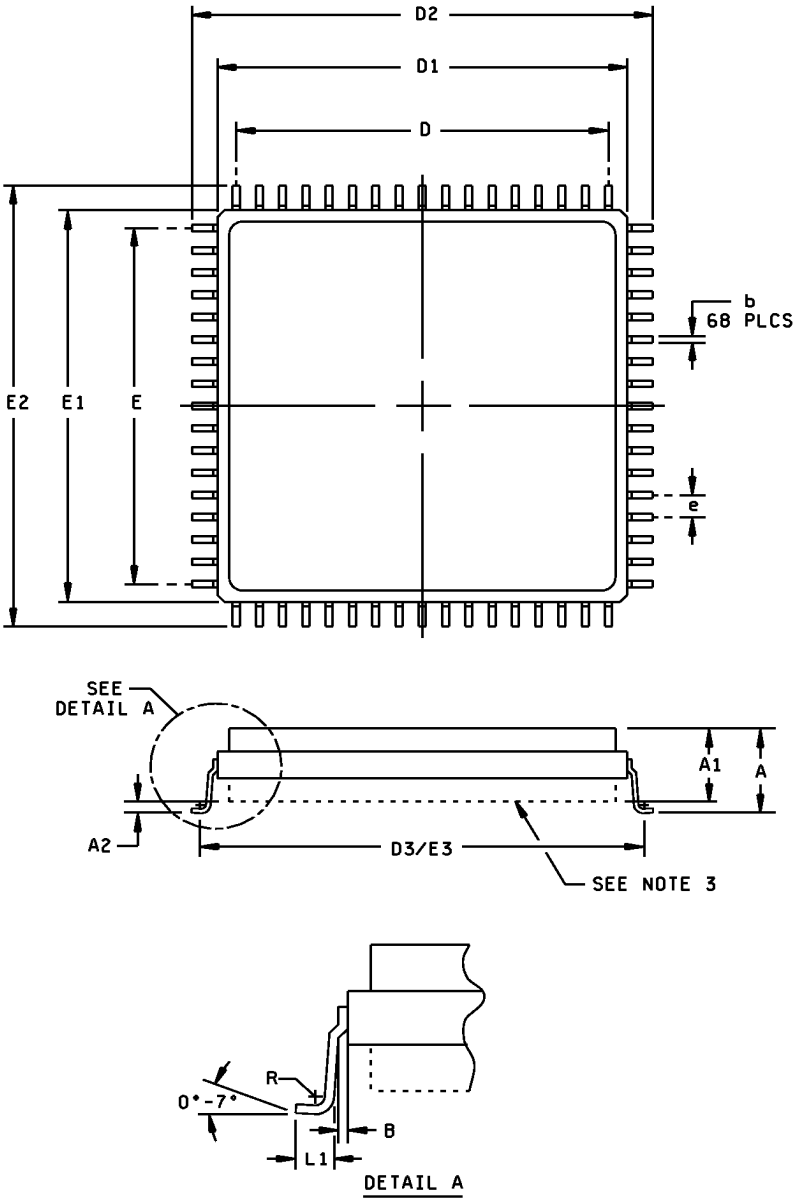


FIGURE 1. Case outline(s).



Powered by ICminer.com Electronic-Library Service CopyRight 2003

Case outline M - Continued

查询"5962-9559501HNA"供应商

| Symbol | Millimeters | | Inches | |
|---|---|---|---|---|
| | Min | Max | Min | Max |
| A | 3.12 | 5.10 | .123 | .200 |
| A1 | 2.30 | 4.72 | .118 | .186 |
| A2 | 0.13 | 0.38 | .005 | .015 |
| b | 0.33 | 0.43 | .013 | .017 |
| B | 0.25 REF | | .010 REF | |
| D/E | 20.32 BSC | | .800 BSC | |
| D1/E1 | 22.10 | 22.61 | .870 | .890 |
| D2/E2 | 24.89 | 25.40 | .980 | 1.000 |
| D3/E3 | 23.77 | 24.28 | .936 | .956 |
| e | 1.27 BSC | | .050 BSC | |
| R | 0.25 TYP | | .010 TYP | |
| L1 | 0.89 | 1.14 | .035 | .045 |

NOTES:
1. The U.S. preferred system of measurement is the metric SI. This item was designed using inch-pound units of measurement. In case of problems involving conflicts between the metric and inch-pound units, the inch-pound units shall rule.
2. Pin numbers are for reference only.
3. Case outline M may be either a single or dual cavity package.

FIGURE 1. Case outlines- Continued.



Powered by ICminer.com Electronic-Library Service CopyRight 2003

Case outline Z - Continued

查询"5962-9559501HNA"供应商

| Symbol | Millimeters | | Inches | |
|---|---|---|---|---|
| | Min | Max | Min | Max |
| A | 3.81 | 5.10 | .150 | .200 |
| A1 | 3.76 | 4.72 | .148 | .186 |
| A2 | 0.00 | 0.38 | .000 | .020 |
| b | 0.33 | 0.43 | .013 | .017 |
| B | 0.25 REF | | .010 REF | |
| D/E | 20.32 BSC | | .800 BSC | |
| D1/E1 | 22.10 | 22.65 | .870 | .890 |
| D2/E2 | 24.89 | 25.35 | .980 | 1.000 |
| D3/E3 | 23.75 | 24.28 | .936 | .956 |
| e | 1.27 BSC | | .050 BSC | |
| R | 0.13 TYP | | .005 TYP | |
| L1 | 0.89 | 1.14 | .035 | .045 |

NOTES:
1. The U.S. preferred system of measurement is the metric SI. This item was designed using inch-pound units of measurement. In case of problems involving conflicts between the metric and inch-pound units, the inch-pound units shall rule.
2. Pin numbers are for reference only.

FIGURE 1. Case outlines- Continued.



Powered by ICminer.com Electronic-Library Service CopyRight 2003

查询"5962-9559501HNA"供应商

Case outline N

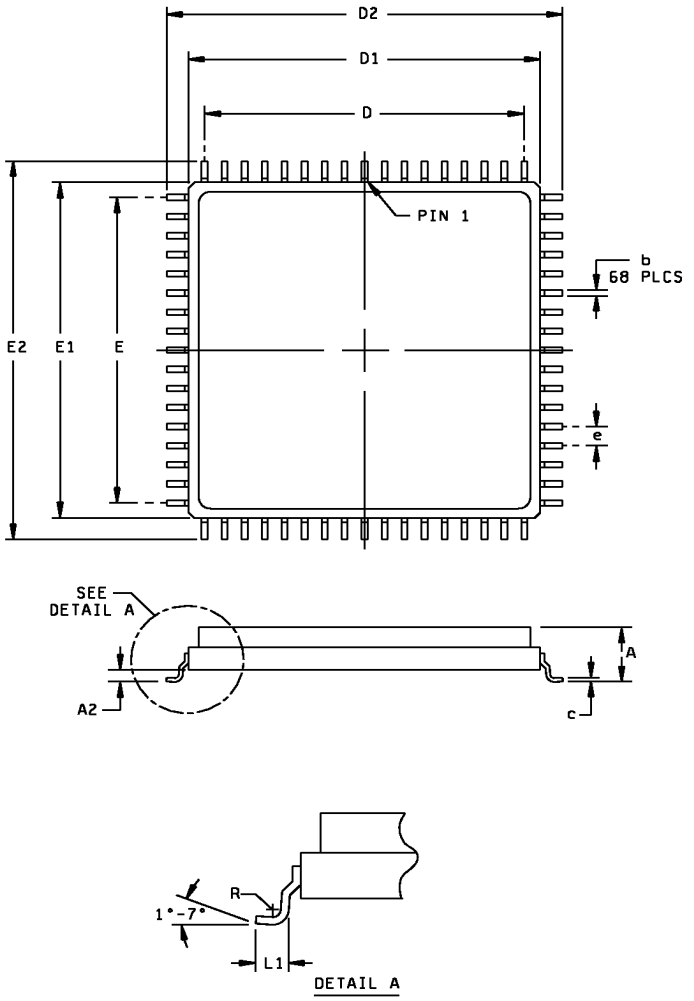


FIGURE 1. Case outlines - Continued.



Powered by ICminer.com Electronic-Library Service CopyRight 2003

查询"5962-9559501HNA"供应商



| Symbol | Millimeters | | Inches | |
|---|---|---|---|---|
| | Min | Max | Min | Max |
| A | | 3.56 | | .140 |
| A2 | 0.36 | 0.71 | .014 | .028 |
| b | 0.33 | 0.43 | .013 | .017 |
| c | 0.23 | 0.30 | .009 | .012 |
| D/E | 20.32 BSC | | .800 BSC | |
| D1/E1 | 22.10 | 22.61 | .870 | .890 |
| D2/E2 | 24.89 | 25.35 | .980 | 1.000 |
| e | 1.27 TYP | | .050 TYP | |
| R | 0.13 MIN | | .005 MIN | |
| L1 | 0.89 | 1.14 | .035 | .045 |

NOTES:
1. The U.S. preferred system of measurement is the metric SI. This item was designed using inch-pound units of measurement. In case of problems involving conflicts between the metric and inch-pound units, the inch-pound units shall rule.
2. Pin numbers are for reference only.

FIGURE 1. Case outlines - Continued.



Powered by ICminer.com Electronic-Library Service CopyRight 2003

查询"5962-9559501HNA"供应商

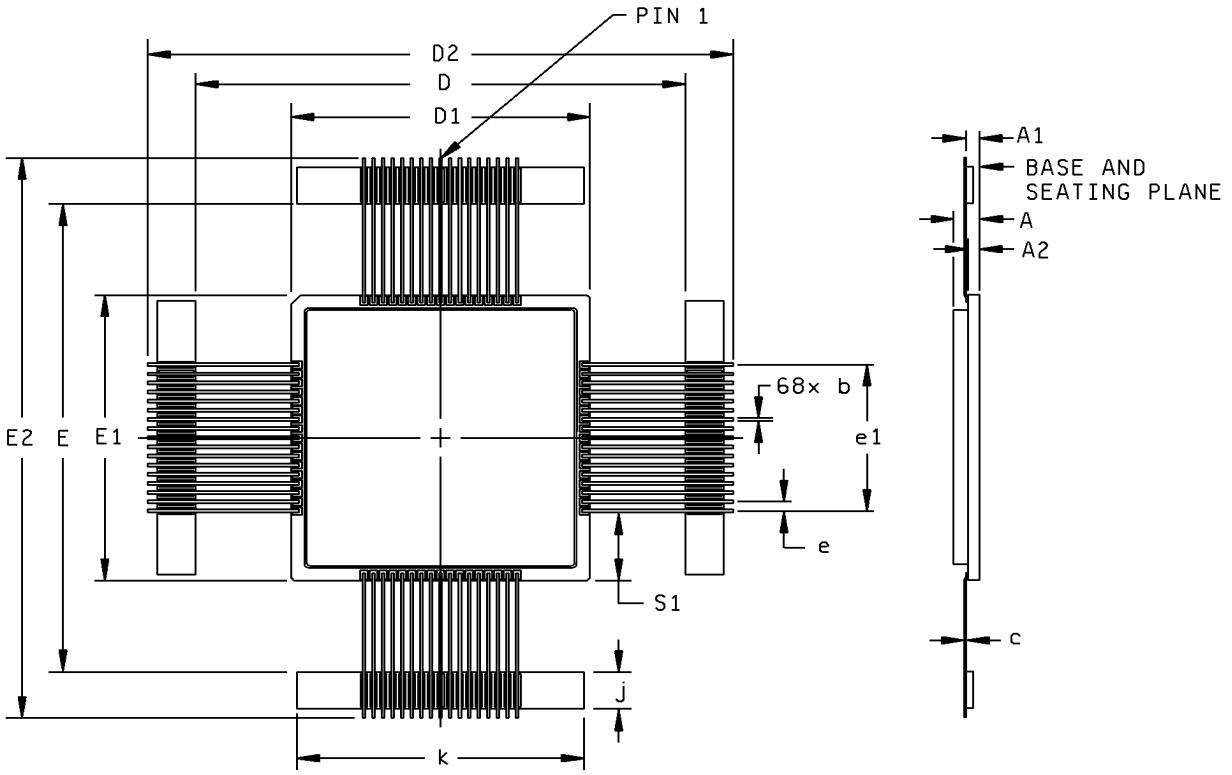


FIGURE 1. Case outline(s) - Continued.



Powered by ICminer.com Electronic-Library Service CopyRight 2003

查询"5962-9559501HNA"供应商

| Symbol | Millimeters | | Inches | |
|---|---|---|---|---|
| | Min | Max | Min | Max |
| A | 2.92 | 5.08 | .115 | .200 |
| A1 | 1.524 BSC | | .060 BSC | |
| A2 | 1.14 | 1.40 | .045 | .055 |
| b | 0.31 | 0.46 | .012 | .018 |
| c | 0.23 | 0.31 | .009 | .012 |
| D/E | 63.63 | 66.42 | 2.505 | 2.615 |
| D1/E1 | 39.24 | 40.01 | 1.545 | 1.575 |
| D2/E2 | 73.28 | 84.20 | 2.885 | 3.315 |
| e | 1.27 BSC | | .050 BSC | |
| e1 | 20.32 BSC | | .800 BSC | |
| j | 4.83 | 5.33 | .190 | .210 |
| k | 37.72 | 38.48 | 1.485 | 1.515 |
| S1 | 9.65 BSC | | .380 BSC | |

NOTES:
1. The U.S. preferred system of measurement is the metric SI. This item was designed using inch-pound units of measurement. In case of problems involving conflicts between the metric and inch-pound units, the inch-pound units shall rule.
2. Pin numbers are for reference only.

FIGURE 1. Case outline(s) - Continued.



Powered by ICminer.com Electronic-Library Service CopyRight 2003

查询"5962-9559501HNA"供应商

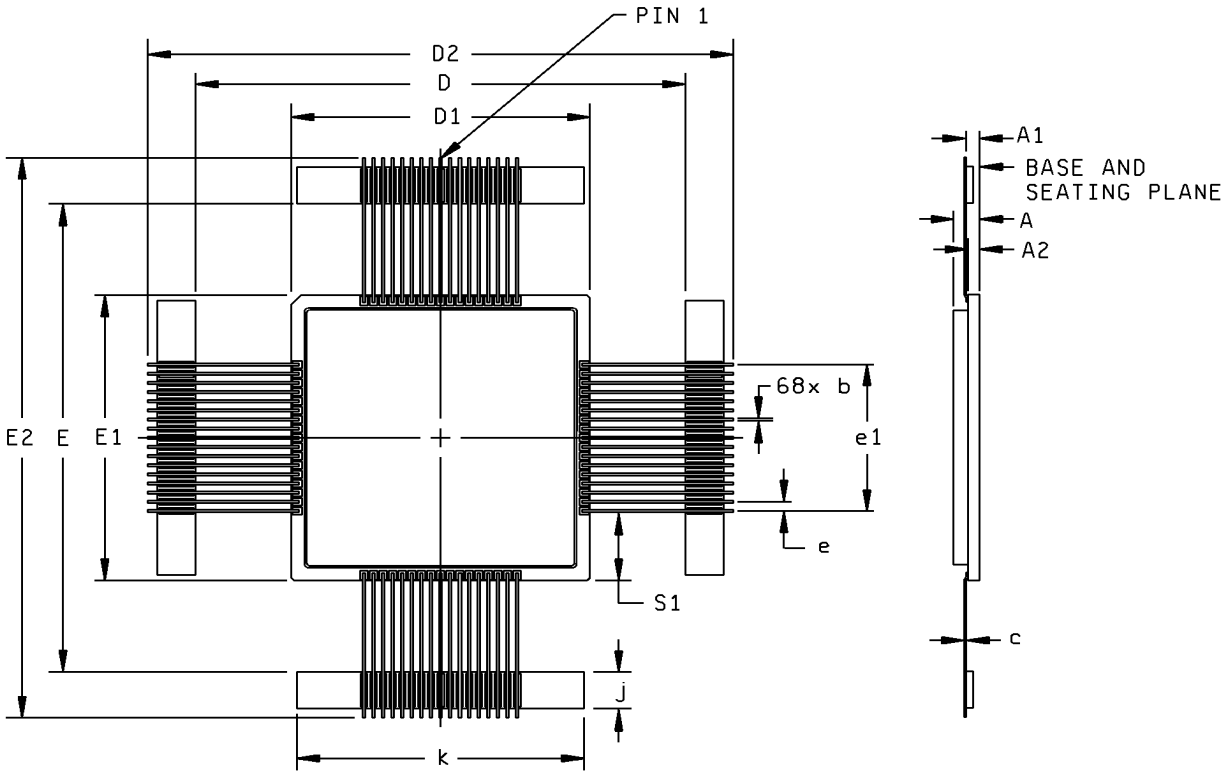


FIGURE 1. Case outline(s) - Continued.



Powered by ICminer.com Electronic-Library Service CopyRight 2003

查询"5962-9559501HNA"供应商

Case outline Y - Continued

| Symbol | Millimeters | | Inches | |
|---|---|---|---|---|
| | Min | Max | Min | Max |
| A | 2.92 | 3.56 | .115 | .140 |
| A1 | 1.524 BSC | | .060 BSC | |
| A2 | 1.14 | 1.40 | .045 | .055 |
| b | 0.31 | 0.46 | .012 | .018 |
| c | 0.23 | 0.31 | .009 | .012 |
| D/E | 63.63 | 66.42 | 2.505 | 2.615 |
| D1/E1 | 39.24 | 40.01 | 1.545 | 1.575 |
| D2/E2 | 73.28 | 84.20 | 2.885 | 3.315 |
| e | 1.27 BSC | | .050 BSC | |
| e1 | 20.32 BSC | | .800 BSC | |
| j | 4.83 | 5.33 | .190 | .210 |
| k | 37.72 | 38.48 | 1.485 | 1.515 |
| S1 | 9.65 BSC | | .380 BSC | |

NOTES:
1. The U.S. preferred system of measurement is the metric SI. This item was designed using inch-pound units of measurement. In case of problems involving conflicts between the metric and inch-pound units, the inch-pound units shall rule.
2. Pin numbers are for reference only.

FIGURE 1. Case outline(s) - Continued.



Powered by ICminer.com Electronic-Library Service CopyRight 2003

查询"5962-9559501HNA"供应商

| Device types | All | Device types | All | Device types | All | Device types | All |
|---|---|---|---|---|---|---|---|
| Case outlines | M, N | Case outlines | M, N | Case outlines | M, N | Case outlines | M, N |
| Terminal number | Terminal symbol | Terminal number | Terminal symbol | Terminal number | Terminal symbol | Terminal number | Terminal symbol |
| 1 | GND | 18 | GND | 35 | $\overline{OE}$ | 52 | GND |
| 2 | $\overline{CS}$3 | 19 | I/O8 | 36 | $\overline{CS}$2 | 53 | I/O23 |
| 3 | A5 | 20 | I/O9 | 37 | NC | 54 | I/O22 |
| 4 | A4 | 21 | I/O10 | 38 | $\overline{WE}$2 | 55 | I/O21 |
| 5 | A3 | 22 | I/O11 | 39 | $\overline{WE}$3 | 56 | I/O20 |
| 6 | A2 | 23 | I/O12 | 40 | $\overline{WE}$4 | 57 | I/O19 |
| 7 | A1 | 24 | I/O13 | 41 | NC | 58 | I/O18 |
| 8 | A0 | 25 | I/O14 | 42 | NC | 59 | I/O17 |
| 9 | NC | 26 | I/O15 | 43 | NC | 60 | I/O16 |
| 10 | I/O0 | 27 | $V_{CC}$ | 44 | I/O31 | 61 | $V_{CC}$ |
| 11 | I/O1 | 28 | A11 | 45 | I/O30 | 62 | A10 |
| 12 | I/O2 | 29 | A12 | 46 | I/O29 | 63 | A9 |
| 13 | I/O3 | 30 | A13 | 47 | I/O28 | 64 | A8 |
| 14 | I/O4 | 31 | A14 | 48 | I/O27 | 65 | A7 |
| 15 | I/O5 | 32 | A15 | 49 | I/O26 | 66 | A6 |
| 16 | I/O6 | 33 | A16 | 50 | I/O25 | 67 | $\overline{WE}$1 |
| 17 | I/O7 | 34 | $\overline{CS}$1 | 51 | I/O24 | 68 | $\overline{CS}$4 |

FIGURE 2. Terminal connections .



Powered by ICminer.com Electronic-Library Service CopyRight 2003

查询"5962-9559501HNA"供应商

| Device types | 05-10 | Device types | 05-10 | Device types | 05-10 | Device types | 05-10 |
|---|---|---|---|---|---|---|---|
| Case outline | Z | Case outline | Z | Case outline | Z | Case outline | Z |
| Terminal number | Terminal symbol | Terminal number | Terminal symbol | Terminal number | Terminal symbol | Terminal number | Terminal symbol |
| 1 | GND | 18 | GND | 35 | $\overline{OE}$ | 52 | GND |
| 2 | $\overline{CS3}$ | 19 | I/O8 | 36 | $\overline{CS2}$ | 53 | I/O23 |
| 3 | A5 | 20 | I/O9 | 37 | NC | 54 | I/O22 |
| 4 | A4 | 21 | I/O10 | 38 | $\overline{WE2}$ | 55 | I/O21 |
| 5 | A3 | 22 | I/O11 | 39 | $\overline{WE3}$ | 56 | I/O20 |
| 6 | A2 | 23 | I/O12 | 40 | $\overline{WE4}$ | 57 | I/O19 |
| 7 | A1 | 24 | I/O13 | 41 | NC | 58 | I/O18 |
| 8 | A0 | 25 | I/O14 | 42 | NC | 59 | I/O17 |
| 9 | NC | 26 | I/O15 | 43 | NC | 60 | I/O16 |
| 10 | I/O0 | 27 | $V_{CC}$ | 44 | I/O31 | 61 | $V_{CC}$ |
| 11 | I/O1 | 28 | A11 | 45 | I/O30 | 62 | A10 |
| 12 | I/O2 | 29 | A12 | 46 | I/O29 | 63 | A9 |
| 13 | I/O3 | 30 | A13 | 47 | I/O28 | 64 | A8 |
| 14 | I/O4 | 31 | A14 | 48 | I/O27 | 65 | A7 |
| 15 | I/O5 | 32 | A15 | 49 | I/O26 | 66 | A6 |
| 16 | I/O6 | 33 | A16 | 50 | I/O25 | 67 | $\overline{WE1}$ |
| 17 | I/O7 | 34 | $\overline{CS1}$ | 51 | I/O24 | 68 | $\overline{CS4}$ |

FIGURE 2. Terminal connections - Continued.



Powered by ICminer.com Electronic-Library Service CopyRight 2003

查询"5962-9559501HNA"供应商

| Device types | All | Device types | All | Device types | All | Device types | All |
|---|---|---|---|---|---|---|---|
| Case outlines | X,Y | Case outlines | X,Y | Case outlines | X,Y | Case outlines | X,Y |
| Terminal number | Terminal symbol | Terminal number | Terminal symbol | Terminal number | Terminal symbol | Terminal number | Terminal symbol |
| 1 | GND | 18 | GND | 35 | $\overline{OE}$ | 52 | GND |
| 2 | $\overline{CS}$1 | 19 | I/O8 | 36 | $\overline{CS}$4 | 53 | I/O23 |
| 3 | A5 | 20 | I/O9 | 37 | NC | 54 | I/O22 |
| 4 | A4 | 21 | I/O10 | 38 | NC | 55 | I/O21 |
| 5 | A3 | 22 | I/O11 | 39 | NC | 56 | I/O20 |
| 6 | A2 | 23 | I/O12 | 40 | NC | 57 | I/O19 |
| 7 | A1 | 24 | I/O13 | 41 | NC | 58 | I/O18 |
| 8 | A0 | 25 | I/O14 | 42 | NC | 59 | I/O17 |
| 9 | NC | 26 | I/O15 | 43 | NC | 60 | I/O16 |
| 10 | I/O0 | 27 | $V_{CC}$ | 44 | I/O31 | 61 | $V_{CC}$ |
| 11 | I/O1 | 28 | A11 | 45 | I/O30 | 62 | A10 |
| 12 | I/O2 | 29 | A12 | 46 | I/O29 | 63 | A9 |
| 13 | I/O3 | 30 | A13 | 47 | I/O28 | 64 | A8 |
| 14 | I/O4 | 31 | A14 | 48 | I/O27 | 65 | A7 |
| 15 | I/O5 | 32 | A15 | 49 | I/O26 | 66 | A6 |
| 16 | I/O6 | 33 | A16 | 50 | I/O25 | 67 | $\overline{WE}$ |
| 17 | I/O7 | 34 | $\overline{CS}$2 | 51 | I/O24 | 68 | $\overline{CS}$3 |

FIGURE 2. Terminal connections - Continued.



Powered by ICminer.com Electronic-Library Service CopyRight 2003

查询"5962-955950HNA"供应商

| $\overline{CS}$ | $\overline{OE}$ | $\overline{WE}$ | Mode | Data I/O | Power |
|---|---|---|---|---|---|
| H | X | X | Standby | High Z | Standby |
| L | L | H | Read | Data out | Active |
| L | H | H | Output disable | High Z | Active (deselect) |
| L | X | L | Write | Data in | Active |

NOTES:
1. H = $V_{IH}$ = High Logic Level.
2. L = $V_{IL}$ = Low Logic Level.
3. X = Do not care (either high or low).
4. High Z = High Impedance state.

FIGURE 3. Truth table.



Powered by ICminer.com Electronic-Library Service CopyRight 2003

查询"5962-9559501HNA"供应商

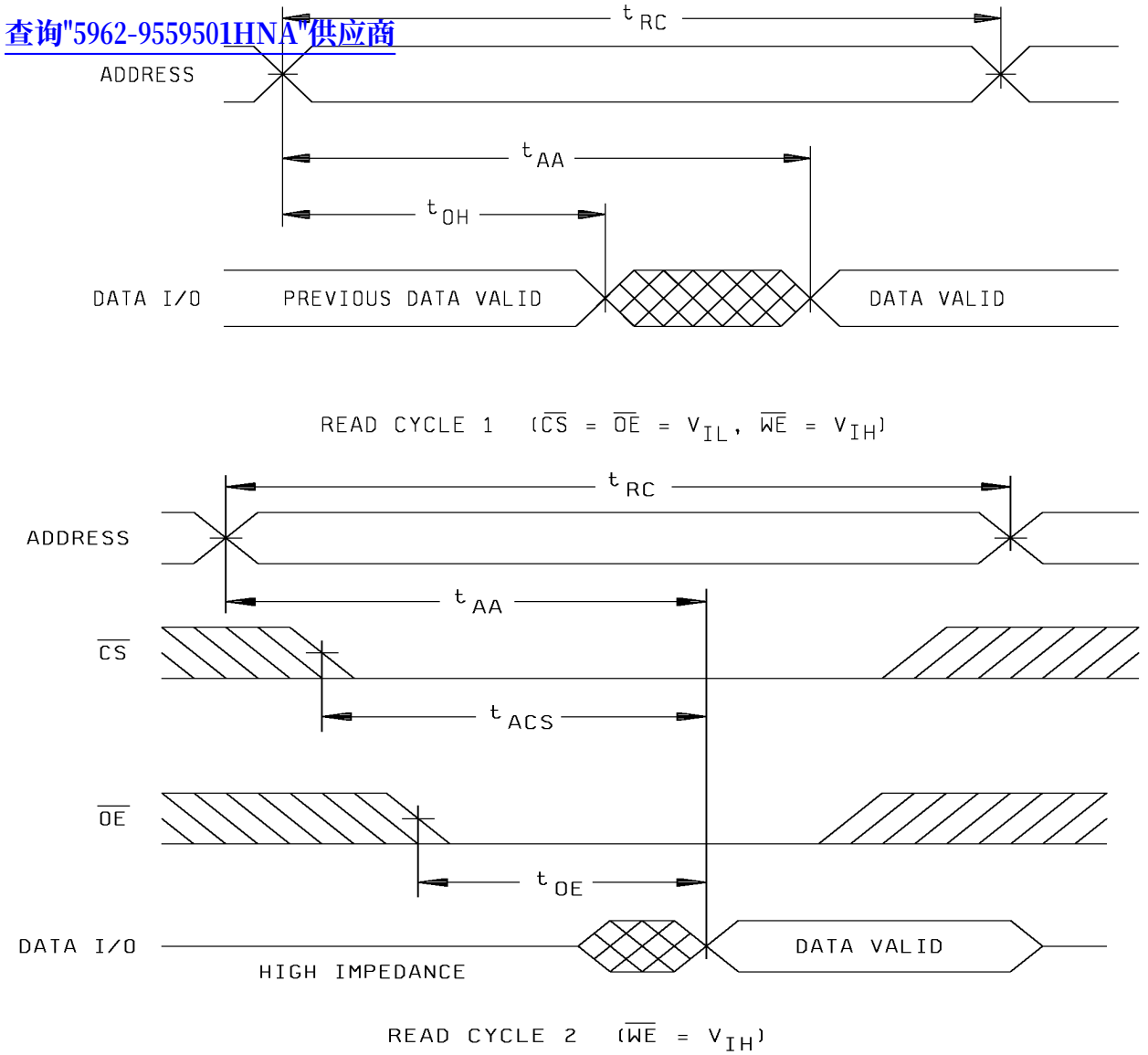


FIGURE 4. Read cycle timing diagram.



Powered by ICminer.com Electronic-Library Service CopyRight 2003

查询"5962-9559501HNA"供应商

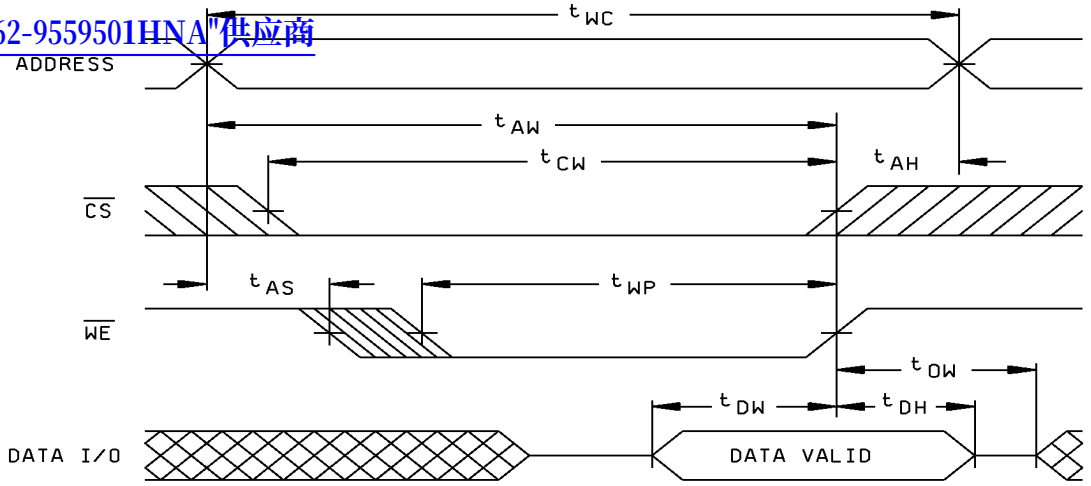


WRITE CYCLE 1 $\overline{WE}$ CONTROLLED

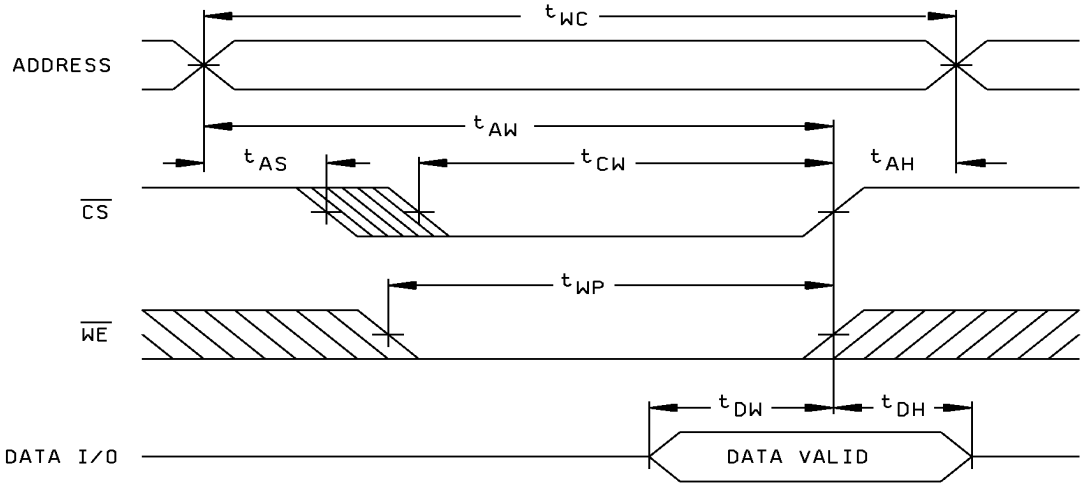


WRITE CYCLE 2 $\overline{CS}$ CONTROLLED

FIGURE 5. Write cycle timing diagram.



Powered by ICminer.com Electronic-Library Service CopyRight 2003

查询"5962-9559501HNA"供应商

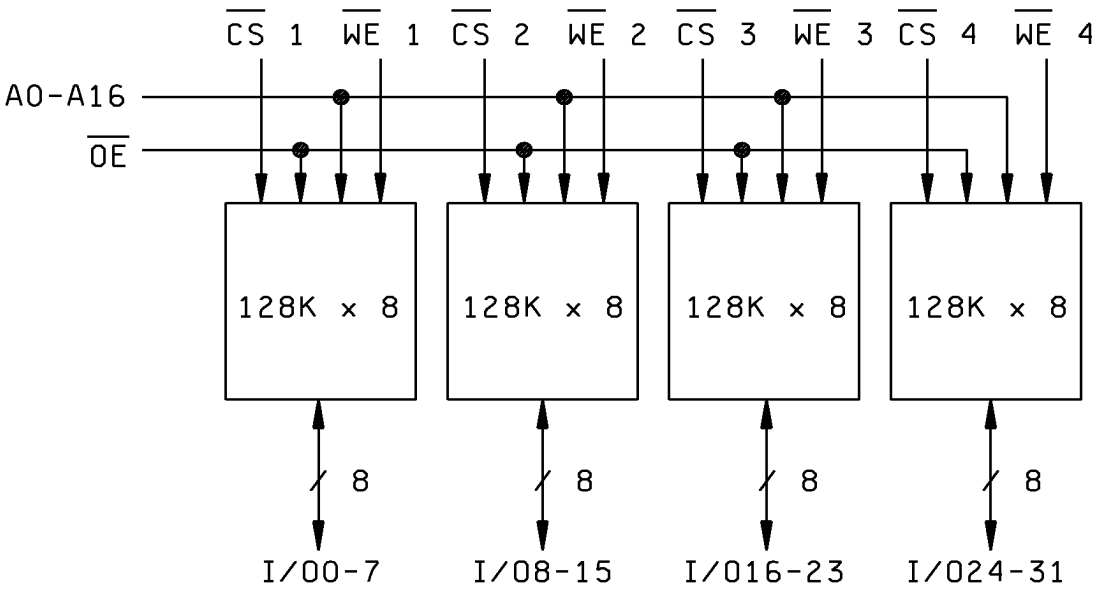


FIGURE 6. Block diagram(s).



Powered by ICminer.com Electronic-Library Service CopyRight 2003

查询"5962-9559501HNA"供应商

Case outlines X and Y

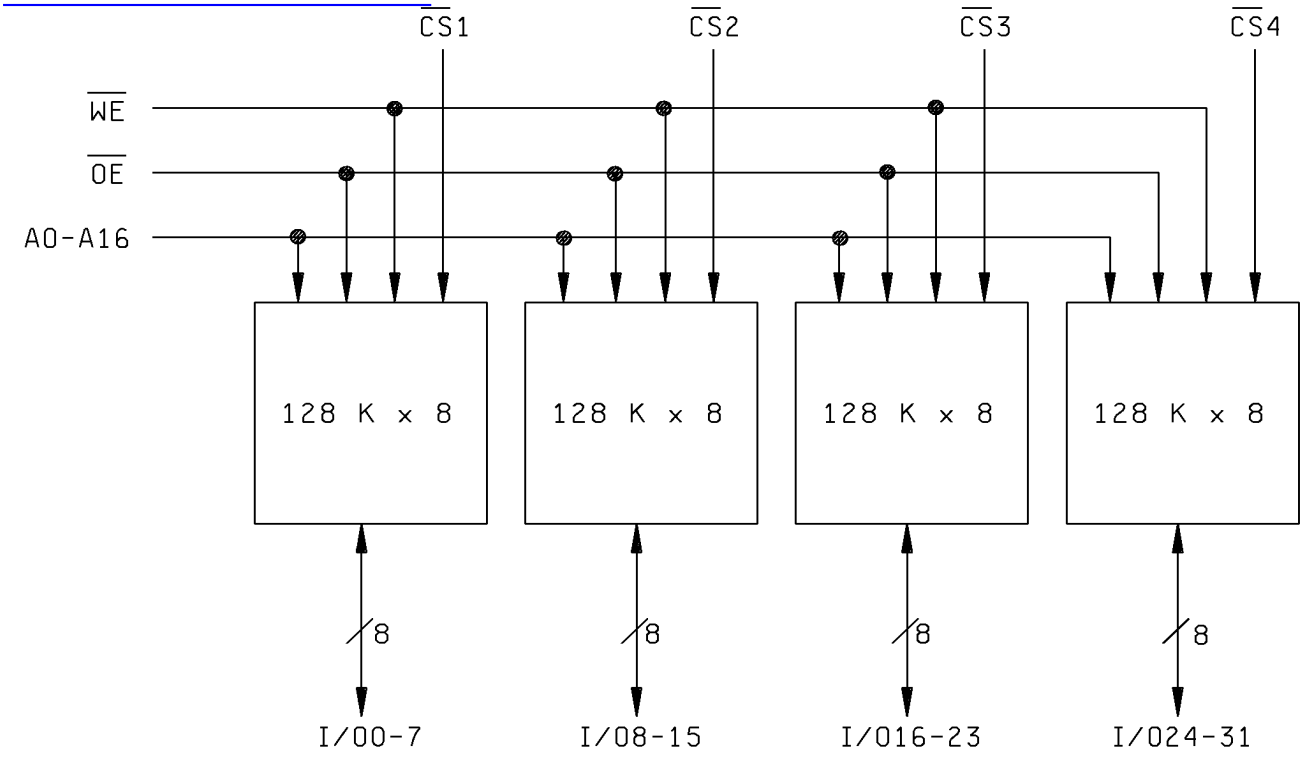


FIGURE 6. Block diagram(s) - Continued.



Powered by ICminer.com Electronic-Library Service CopyRight 2003

查询"5962-9559501HNA"供应商

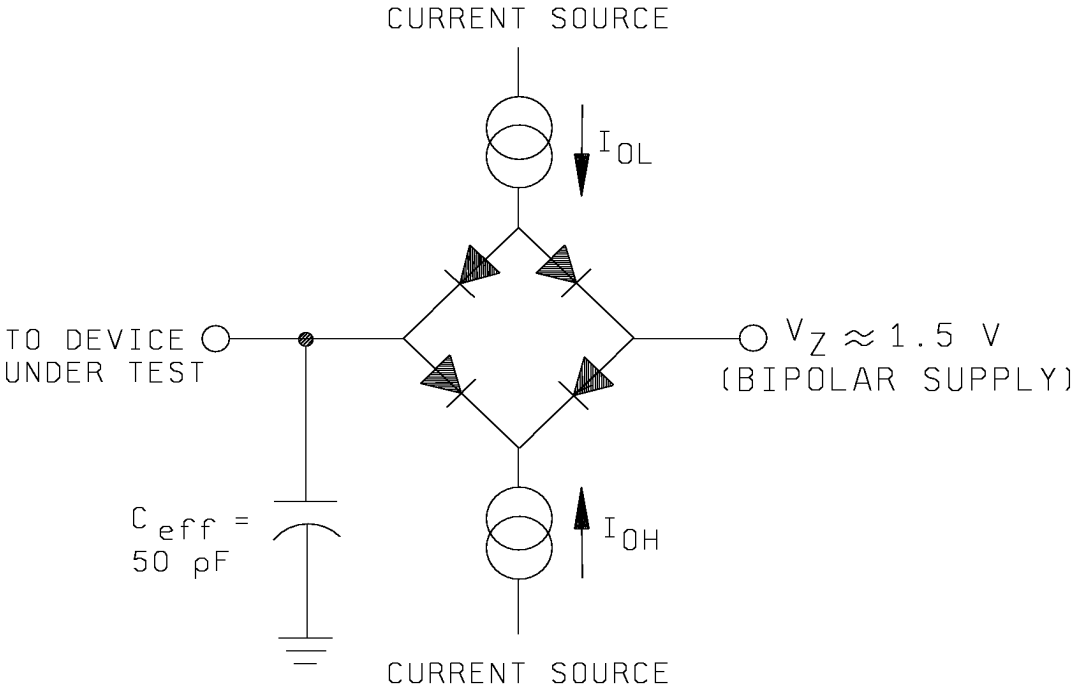


| Parameter | Typ. | Unit |
|---|---|---|
| Input Pulse Level | 0 - 3.0 | V |
| Input Rise and Fall | 5 | nS |
| Input and Output Reference Level | 1.5 | V |
| Output Load Capacitance | 50 | pf |

NOTES:
1. $V_Z$ is programmable from -2V to +7V.
2. $I_{OL}$ and $I_{OH}$ are programmable from 0 to 16mA.
3. Tester impedance is ZO = 75 Ohms.
4. $V_Z$ is typically the midpoint of $V_{OH}$ and $V_{OL}$.
5. $I_{OL}$ and $I_{OH}$ are adjusted to simulate a typical resistive load circuit.
6. ATE tester includes jig capacitance.

FIGURE 7. Output load circuit.



Powered by ICminer.com Electronic-Library Service CopyRight 2003

3.7 Certificate of compliance. A certificate of compliance shall be required from a manufacturer in order to supply to this drawing. The certificate of compliance (original copy) submitted to DSCC-VA shall affirm that the manufacturer's product meets the performance requirements of MIL-PRF-38534 and herein.

查询"5962-9559501HNA"供应商

3.8 Certificate of conformance. A certificate of conformance as required in MIL-PRF-38534 shall be provided with each lot of microcircuits delivered to this drawing.

TABLE II. Electrical test requirements.

| MIL-PRF-38534 test requirements | Subgroups (in accordance with MIL-PRF-38534, group A test table) |
|---|---|
| Interim electrical parameters | 1,4,7,9 |
| Final electrical test parameters | 1*,2,3,4,7,8A,8B,9,10, 11 |
| Group A test requirements | 1,2,3,4,7,8A,8B,9,10, 11 |
| Group C end-point electrical parameters | 1,2,3,4,7,8A,8B,9,10, 11 |
| End-point electrical parameters for Radiation Hardness Assurance (RHA) devices | Not applicable |

* PDA applies to subgroup 1.

4. QUALITY ASSURANCE PROVISIONS

4.1 Sampling and inspection. Sampling and inspection procedures shall be in accordance with MIL-PRF-38534 or as modified in the device manufacturer's Quality Management (QM) plan. The modification in the QM plan shall not affect the form, fit, or function as described herein.

4.2 Screening. Screening shall be in accordance with MIL-PRF-38534. The following additional criteria shall apply:

a. Burn-in test, method 1015 of MIL-STD-883.

(1) Test condition B. The test circuit shall be maintained by the manufacturer under document revision level control and shall be made available to either DSCC-VA or the acquiring activity upon request. Also, the test circuit shall specify the inputs, outputs, biases, and power dissipation, as applicable, in accordance with the intent specified in test method 1015 of MIL-STD-883.

(2) $T_A$ as specified in accordance with table I of method 1015 of MIL-STD-883.

b. Interim and final electrical test parameters shall be as specified in table II herein, except interim electrical parameter tests prior to burn-in are optional at the discretion of the manufacturer.



Powered by ICminer.com Electronic-Library Service CopyRight 2003

4.3 Conformance and periodic inspections. Conformance inspection (CI) and periodic inspection (PI) shall be in accordance with MIL-PRF-38534 and as specified herein.

查询"5962-9559501HNA"供应商

4.3.1 Group A inspection (CI). Group A inspection shall be in accordance with MIL-PRF-38534 and as follows:

a. Tests shall be as specified in table II herein.

b. Subgroups 5 and 6 shall be omitted.

c. Subgroups 7 and 8 shall include verification of the truth table on figure 3.

4.3.2 Group B inspection (PI). Group B inspection shall be in accordance with MIL-PRF-38534.

4.3.3 Group C inspection (PI). Group C inspection shall be in accordance with MIL-PRF-38534 and as follows:

a. End-point electrical parameters shall be as specified in table II herein.

b. Steady-state life test, method 1005 of MIL-STD-883.

(1) Test condition B. The test circuit shall be maintained by the manufacturer under document revision level control and shall be made available to either DSCC-VA or the acquiring activity upon request. Also, the test circuit shall specify the inputs, outputs, biases, and power dissipation, as applicable, in accordance with the intent specified in test method 1005 of MIL-STD-883.

(2) $T_A$ as specified in accordance with table I of method 1005 of MIL-STD-883.

(3) Test duration: 1,000 hours, except as permitted by method 1005 of MIL-STD-883.

4.3.4 Group D inspection (PI). Group D inspection shall be in accordance with MIL-PRF-38534.

4.3.5 Radiation Hardness Assurance (RHA) inspection. RHA inspection is not currently applicable to this drawing.

5. PACKAGING

5.1 Packaging requirements. The requirements for packaging shall be in accordance with MIL-PRF-38534.

6. NOTES

6.1 Intended use. Microcircuits conforming to this drawing are intended for use for Government microcircuit applications (original equipment), design applications, and logistics purposes.

6.2 Replaceability. Microcircuits covered by this drawing will replace the same generic device covered by a contractor-prepared specification or drawing.

6.3 Configuration control of SMD's. All proposed changes to existing SMD's will be coordinated with the users of record for the individual documents. This coordination will be accomplished in accordance with MIL-STD-973 using DD Form 1692, Engineering Change Proposal.

6.4 Record of users. Military and industrial users shall inform Defense Supply Center Columbus when a system application requires configuration control and the applicable SMD. DSCC will maintain a record of users and this list will be used for coordination and distribution of changes to the drawings. Users of drawings covering microelectronic devices (FSC 5962) should contact DSCC-VA, telephone (614) 692-0544.

6.5 Comments. Comments on this drawing should be directed to DSCC-VA, Columbus, Ohio 43216-5000, or telephone (614) 692-0512.

6.6 Sources of supply. Sources of supply are listed in MIL-HDBK-103 and QML-38534. The vendors listed in MIL-HDBK-103 and QML-38534 have submitted a certificate of compliance (see 3.7 herein) to DSCC-VA and have agreed to this drawing.



Powered by ICminer.com Electronic-Library Service CopyRight 2003

STANDARD MICROCIRCUIT DRAWING SOURCE APPROVAL BULLETIN

DATE: 99-09-07

查询"5962-9559501HNA"供应商

Approved sources of supply for SMD 5962-95595 are listed below for immediate acquisition only and shall be added to MIL-HDBK-103 and QML-38534 during the next revisions. MIL-HDBK-103 and QML-38534 will be revised to include the addition or deletion of sources. The vendors listed below have agreed to this drawing and a certificate of compliance has been submitted to and accepted by DSCC-VA. This bulletin is superseded by the next dated revisions of MIL-HDBK- 103 and QML-38534.

| Standardized microcircuit drawing PIN 1/ | Vendor CAGE number | Vendor similar PIN 2/ |
|---|---|---|
| 5962-9559501HMC | 54230 | WS-128K32-120G2Q, WS-128K32-120G2UQ |
| 5962-9559501HMA | 54230 | WS-128K32-120G2Q, WS-128K32-120G2UQ |
| 5962-9559501HNC | 54230 | WS-128K32-120G2UQ |
| 5962-9559501HNA | 54230 | WS-128K32-120G2UQ |
| 5962-9559501HXC | 54230 | WS-128K32-120G4Q |
| 5962-9559501HXA | 54230 | WS-128K32-120G4Q |
| 5962-9559501HYC | 54230 | WS-128K32-120G4TQ |
| 5962-9559501HYA | 54230 | WS-128K32-120G4TQ |
| 5962-9559502HMC | 54230 | WS-128K32-100G2Q, WS-128K32-100G2UQ |
| 5962-9559502HMA | 54230 | WS-128K32-100G2Q, WS-128K32-100G2UQ |
| 5962-9559502HNC | 54230 | WS-128K32-100G2UQ |
| 5962-9559502HNA | 54230 | WS-128K32-100G2UQ |
| 5962-9559502HXC | 54230 | WS-128K32-100G4Q |
| 5962-9559502HXA | 54230 | WS-128K32-100G4Q |
| 5962-9559502HYC | 54230 | WS-128K32-100G4TQ |
| 5962-9559502HYA | 54230 | WS-128K32-100G4TQ |
| 5962-9559503HMC | 54230 | WS-128K32-85G2Q, WS-128K32-85G2UQ |
| 5962-9559503HMA | 54230 | WS-128K32-85G2Q, WS-128K32-85G2UQ |
| 5962-9559503HNC | 54230 | WS-128K32-85G2UQ |
| 5962-9559503HNA | 54230 | WS-128K32-85G2UQ |
| 5962-9559503HXC | 54230 | WS-128K32-85G4Q |
| 5962-9559503HXA | 54230 | WS-128K32-85G4Q |
| 5962-9559503HYC | 54230 | WS-128K32-85G4TQ |
| 5962-9559503HYA | 54230 | WS-128K32-85G4TQ |
| 5962-9559504HMC | 54230 | WS-128K32-70G2Q, WS-128K32-70G2UQ |
| 5962-9559504HMA | 54230 | WS-128K32-70G2Q, WS-128K32-70G2UQ |
| 5962-9559504HNC | 54230 | WS-128K32-70G2UQ |
| 5962-9559504HNA | 54230 | WS-128K32-70G2UQ |
| 5962-9559504HXC | 54230 | WS-128K32-70G4Q |
| 5962-9559504HXA | 54230 | WS-128K32-70G4Q |
| 5962-9559504HYC | 54230 | WS-128K32-70G4TQ |
| 5962-9559504HYA | 54230 | WS-128K32-70G4TQ |
| 5962-9559505HMC | 0EU86 | AS8S128K32Q-55/883C |
| 5962-9559505HMC | 54230 | WS-128K32-55G2Q, WS-128K32-55G2UQ |
| 5962-9559505HMC | 88379 | ACT-S128K32N-055F2Q |
| 5962-9559505HMA | 0EU86 | AS8S128K32Q-55/883C |
| 5962-9559505HMA | 54230 | WS-128K32-55G2Q, WS-128K32-55G2UQ |
| 5962-9559505HMA | 88379 | ACT-S128K32N-055F2Q |
| 5962-9559505HNC | 0EU86 | AS8S128K32QT-55/883C |
| 5962-9559505HNC | 54230 | WS-128K32-55G2UQ |
| 5962-9559505HNA | 0EU86 | AS8S128K32QT-55/883C |
| 5962-9559505HNA | 54230 | WS-128K32-55G2UQ |
| 5962-9559505HXC | 54230 | WS-128K32-55G4Q |
| 5962-9559505HXC | 88379 | ACT-S128K32N-055F1Q |
| 5962-9559505HXA | 54230 | WS-128K32-55G4Q |
| 5962-9559505HXA | 88379 | ACT-S128K32N-055F1Q |
| 5962-9559505HYC | 54230 | WS-128K32-55G4TQ |
| 5962-9559505HYC | 88379 | ACT-S128K32N-055F1Q |
| 5962-9559505HYA | 54230 | WS-128K32-55G4TQ |
| 5962-9559505HYA | 88379 | ACT-S128K32N-055F1Q |
| 5962-9559505HZC | 88379 | ACT-S128K32N-055F2Q |
| 5962-9559505HZA | 88379 | ACT-S128K32N-055F2Q |



Powered by ICminer.com Electronic-Library Service CopyRight 2003

查询"5962-9559501HNA"供应商

| Standardized microcircuit drawing PIN 1/ | Vendor CAGE number | Vendor similar PIN 2/ |
|---|---|---|
| 5962-9559506HMC | 0EU86 | AS8S128K32Q-45/883C |
| 5962-9559506HMC | 54230 | WS-128K32-45G2Q |
| 5962-9559506HMC | 88379 | ACT-S128K32N-045F2Q |
| 5962-9559506HMA | 0EU86 | AS8S128K32Q-45/883C |
| 5962-9559506HMA | 54230 | WS-128K32-45G2Q |
| 5962-9559506HMA | 88379 | ACT-S128K32N-045F2Q |
| 5962-9559506HNC | 0EU86 | AS8S128K32QT-45/883C |
| 5962-9559506HNA | 0EU86 | AS8S128K32QT-45/883C |
| 5962-9559506HXC | 54230 | WS-128K32-45G4Q |
| 5962-9559506HXC | 88379 | ACT-S128K32N-045F1Q |
| 5962-9559506HXA | 54230 | WS-128K32-45G4Q |
| 5962-9559506HXA | 88379 | ACT-S128K32N-045F1Q |
| 5962-9559506HYC | 54230 | WS-128K32-45G4TQ |
| 5962-9559506HYC | 88379 | ACT-S128K32N-045F1Q |
| 5962-9559506HYA | 54230 | WS-128K32-45G4TQ |
| 5962-9559506HYA | 88379 | ACT-S128K32N-045F1Q |
| 5962-9559506HZC | 88379 | ACT-S128K32N-045F2Q |
| 5962-9559506HZA | 88379 | ACT-S128K32N-045F2Q |
| 5962-9559507HMC | 0EU86 | AS8S128K32Q-35/883C |
| 5962-9559507HMC | 54230 | WS-128K32-35G2Q |
| 5962-9559507HMC | 88379 | ACT-S128K32N-035F2Q |
| 5962-9559507HMA | 0EU86 | AS8S128K32Q-35/883C |
| 5962-9559507HMA | 54230 | WS-128K32-35G2Q |
| 5962-9559507HMA | 88379 | ACT-S128K32N-035F2Q |
| 5962-9559507HNC | 0EU86 | AS8S128K32QT-35/883C |
| 5962-9559507HNA | 0EU86 | AS8S128K32QT-35/883C |
| 5962-9559507HXC | 54230 | WS-128K32-35G4Q |
| 5962-9559507HXC | 88379 | ACT-S128K32N-035F1Q |
| 5962-9559507HXA | 54230 | WS-128K32-35G4Q |
| 5962-9559507HXA | 88379 | ACT-S128K32N-035F1Q |
| 5962-9559507HYC | 54230 | WS-128K32-35G4TQ |
| 5962-9559507HYC | 88379 | ACT-S128K32N-035F1Q |
| 5962-9559507HYA | 54230 | WS-128K32-35G4TQ |
| 5962-9559507HYA | 88379 | ACT-S128K32N-035F1Q |
| 5962-9559507HZC | 88379 | ACT-S128K32N-035F2Q |
| 5962-9559507HZA | 88379 | ACT-S128K32N-035F2Q |
| 5962-9559508HMC | 0EU86 | AS8S128K32Q-25/883C |
| 5962-9559508HMC | 54230 | WS-128K32-25G2Q |
| 5962-9559508HMC | 88379 | ACT-S128K32N-025F2Q |
| 5962-9559508HMA | 0EU86 | AS8S128K32Q-25/883C |
| 5962-9559508HMA | 54230 | WS-128K32-25G2Q |
| 5962-9559508HMA | 88379 | ACT-S128K32N-025F2Q |
| 5962-9559508HNC | 0EU86 | AS8S128K32QT-25/883C |
| 5962-9559508HNA | 0EU86 | AS8S128K32QT-25/883C |
| 5962-9559508HXC | 54230 | WS-128K32-25G4Q |
| 5962-9559508HXC | 88379 | ACT-S128K32N-025F1Q |
| 5962-9559508HXA | 54230 | WS-128K32-25G4Q |
| 5962-9559508HXA | 54230 | ACT-S128K32N-025F1Q |
| 5962-9559508HYC | 54230 | WS-128K32-25G4TQ |
| 5962-9559508HYC | 88379 | ACT-S128K32N-025F1Q |
| 5962-9559508HYA | 54230 | WS-128K32-25G4TQ |
| 5962-9559508HYA | 88379 | ACT-S128K32N-025F1Q |
| 5962-9559508HZC | 88379 | ACT-S128K32N-025F2Q |
| 5962-9559508HZA | 88379 | ACT-S128K32N-025F2Q |



Powered by ICminer.com Electronic-Library Service CopyRight 2003

查询"5962-9559501HNA"供应商

| Standardized microcircuit drawing PIN 1/ | Vendor CAGE number | Vendor similar PIN 2/ |
|---|---|---|
| 5962-9559509HMC | 0EU86 | AS8S128K32Q-20/883C |
| 5962-9559509HMC | 54230 | WS-128K32-20G2Q |
| 5962-9559509HMC | 88379 | ACT-S128K32N-020F2Q |
| 5962-9559509HMA | 0EU86 | AS8S128K32Q-20/883C |
| 5962-9559509HMA | 54230 | WS-128K32-20G2Q |
| 5962-9559509HMA | 88379 | ACT-S128K32N-020F2Q |
| 5962-9559509HNC | 0EU86 | AS8S128K32QT-20/883C |
| 5962-9559509HNA | 0EU86 | AS8S128K32QT-20/883C |
| 5962-9559509HXC | 54230 | WS-128K32-20G4Q |
| 5962-9559509HXC | 88379 | ACT-S128K32N-020F1Q |
| 5962-9559509HXA | 54230 | WS-128K32-20G4Q |
| 5962-9559509HXA | 88379 | ACT-S128K32N-020F1Q |
| 5962-9559509HYC | 54230 | WS-128K32-20G4TQ |
| 5962-9559509HYC | 88379 | ACT-S128K32N-020F1Q |
| 5962-9559509HYA | 54230 | WS-128K32-20G4TQ |
| 5962-9559509HYA | 88379 | ACT-S128K32N-020F1Q |
| 5962-9559509HZC | 88379 | ACT-S128K32N-020F2Q |
| 5962-9559509HZA | 88379 | ACT-S128K32N-020F2Q |
| 5962-9559510HMC | 54230 | WS-128K32-17G2Q |
| 5962-9559510HMC | 88379 | ACT-S128K32N-017F2Q |
| 5962-9559510HMA | 54230 | WS-128K32-17G2Q |
| 5962-9559510HMA | 88379 | ACT-S128K32N-017F2Q |
| 5962-9559510HXC | 54230 | WS-128K32-17G4Q |
| 5962-9559510HXC | 88379 | ACT-S128K32N-017F1Q |
| 5962-9559510HXA | 54230 | WS-128K32-17G4Q |
| 5962-9559510HXA | 88379 | ACT-S128K32N-017F1Q |
| 5962-9559510HYC | 54230 | WS-128K32-17G4TQ |
| 5962-9559510HYC | 88379 | ACT-S128K32N-017F1Q |
| 5962-9559510HYA | 54230 | WS-128K32-17G4TQ |
| 5962-9559510HYA | 88379 | ACT-S128K32N-017F1Q |
| 5962-9559510HZC | 88379 | ACT-S128K32N-017F2Q |
| 5962-9559510HZA | 88379 | ACT-S128K32N-017F2Q |
| 5962-9559511HMC | 54230 | WS-128K32-15G2Q |
| 5962-9559511HMA | 54230 | WS-128K32-15G2Q |
| 5962-9559511HXC | 54230 | WS-128K32-15G4Q |
| 5962-9559511HXA | 54230 | WS-128K32-15G4Q |
| 5962-9559511HYC | 54230 | WS-128K32-15G4TQ |
| 5962-9559511HYA | 54230 | WS-128K32-15G4TQ |

1/ The lead finish shown for each PIN representing a hermetic package is the most readily available from the manufacturer list for that part. If the desired lead finish is not listed contact the vandor to determine its availability.

2/ Caution. Do not use this number for item acquisition. Items acquired to this number may not satisfy the performance requirements of this drawing.



Powered by ICminer.com Electronic-Library Service CopyRight 2003

查询"5962-9559501HNA"供应商

| Vendor CAGE number | Vendor name and address |
|---|---|
| 0EU86 | Austin Semiconductor Incorporated<br>8701 Cross Park Drive<br>Austin, TX 78754-4566 |
| 54230 | White Electronic Designs Corporation<br>3601 East University Drive<br>Phoenix, AZ 85034 |
| 88379 | Aeroflex Circuit Technology Corporation<br>35 South Service Road<br>Plainview, NY 11803-4193 |

The information contained herein is disseminated for convenience only and the Government assumes no liability whatsoever for any inaccuracies in this information bulletin.



Powered by ICminer.com Electronic-Library Service CopyRight 2003