查询"73012"供应商

Technical Data Sheet

Model 73012
MCX JACK STRAIGHT CRIMP, RG179

Model 73012 MCX JACK STRAIGHT CRIMP, RG179

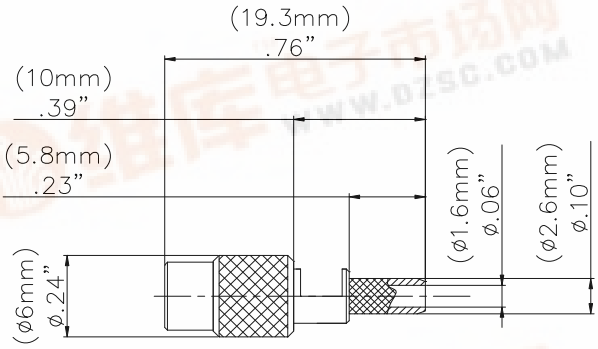

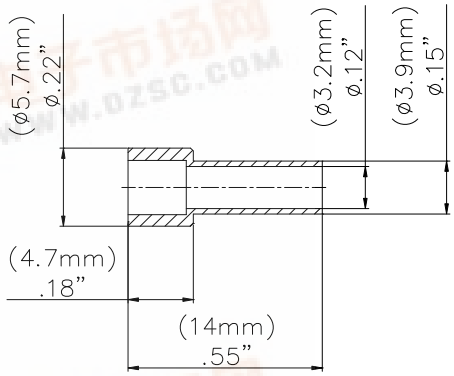

Snap-on coupling and miniature size for fast connect and disconnect where space is limited.

Features

- DC - 2 GHz bandwidth.
- 30% smaller than SMB connectors.
- Meets CECC 22220.
- Perfect for applications where space, weight, performance and ease of assembly are required.
- Precision machined and gold-plated for low loss.

Materials

- Body is machined brass with gold plating.
- Center contacts – Plug is gold plated brass and Jack is gold plated beryllium copper.
- High quality PTFE insulators.
- Crimp Ferrules are gold or nickel plated copper.

Ordering Information

Model: 73012
Description: MCX JACK STRAIGHT CRIMP, RG179

Specifications

Impedance	75 Ω
Frequency Range	DC - 2 GHz
VSWR	1.4 max.
Working Voltage	170 Vrms max.
Dielectric withstand voltage	750 Vrms
Center / Outer contact resistance	5 / 2.5 mΩ
Number of insertions	500 cycles min.
Insulation resistance	1,000 MΩ min.
Temperature Range	-55˚ C to 155˚ C, -67˚ F to 311˚ F

USA: Sales: 800-490-2361
Technical Support: technicalsupport@pomonatest.com
Fax: 425-446-5844
Europe: 31-(0) 40 2675 150 **International**: 425-446-5500
Where to Buy: www.pomonaelectronics.com

All dimensions are in inches. Tolerances (except noted): .xx = ±.02” (.51 mm), .xxx = ± .005” (.127 mm). All specifications are to the latest revisions. Specifications are subject to change without notice. Registered trademarks are the property of their respective companies.
D2003449 REV 001

Copyright © 2007 11/25/2007

pdf.dzsc.com

Model 73012
MCX JACK STRAIGHT CRIMP, RG179

Cable Types and Crimp Die Information

Connector Model #	Cable Groups	Crimp Die Cavity Size for Outer Ferrule
73012	RG179	.128 (3.3)

Cable Assembly Instructions

1. CUT CABLE END EVENLY AND PERPENDICULAR

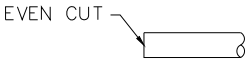

2. SLIDE OUTER FERRULE OVER CABLE END.

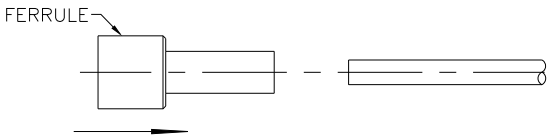

3. STRIP CABLE JACKET, BRAID, AND DIELECTRIC TO SPECIFICATION LENGTHS.

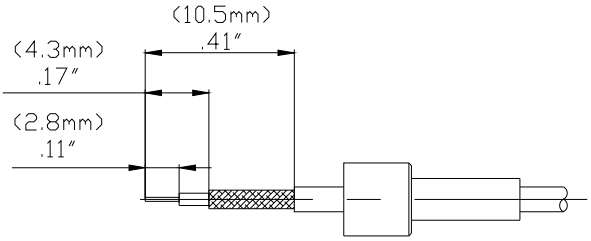

RECOMMENDED STRIP LENGTHS

4. FLARE BRAID END SLIGHTLY.

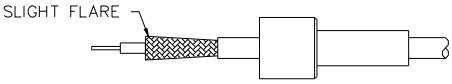

5. SLIDE CONNECTOR BODY OVER CENTER CONDUCTOR.

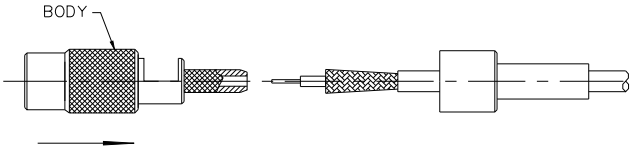

6. SLIDE OUTER FERRULE OVER BRAID AND UP AGAINST BODY ASSEMBLY.

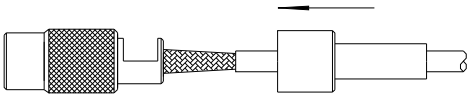

7. CRIMP OUTER FERRULE WITH APPROPRIATE CRIMP TOOL.

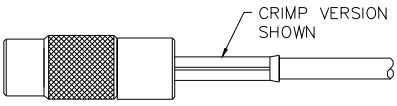

USA: Sales: 800-490-2361
Technical Support: technicalsupport@pomonatest.com
Fax: 425-446-5844
Europe: 31-(0) 40 2675 150 **International**: 425-446-5500
Where to Buy: www.pomonaelectronics.com

All dimensions are in inches. Tolerances (except noted): .xx = ±.02" (.51 mm), .xxx = ± .005" (.127 mm). All specifications are to the latest revisions. Specifications are subject to change without notice. Registered trademarks are the property of their respective companies.
D2003449 REV 001

Copyright © 2007 11/25/2007