THIS DRAWING IS UNPUBLISHED. RELEASED FOR PUBLICATION 20
© COPYRIGHT 2007-20 BY TYCO ELECTRONICS CORPORATION, ALL RIGHTS RESERVED.
查询"2008611-1"供应商

LOC	DIST
-	-

REVISIONS

P	LTR	DESCRIPTION	DATE	DWN	APVD
	A1	REVISED PER ECO-09-010030	23APR2009	SS	MS

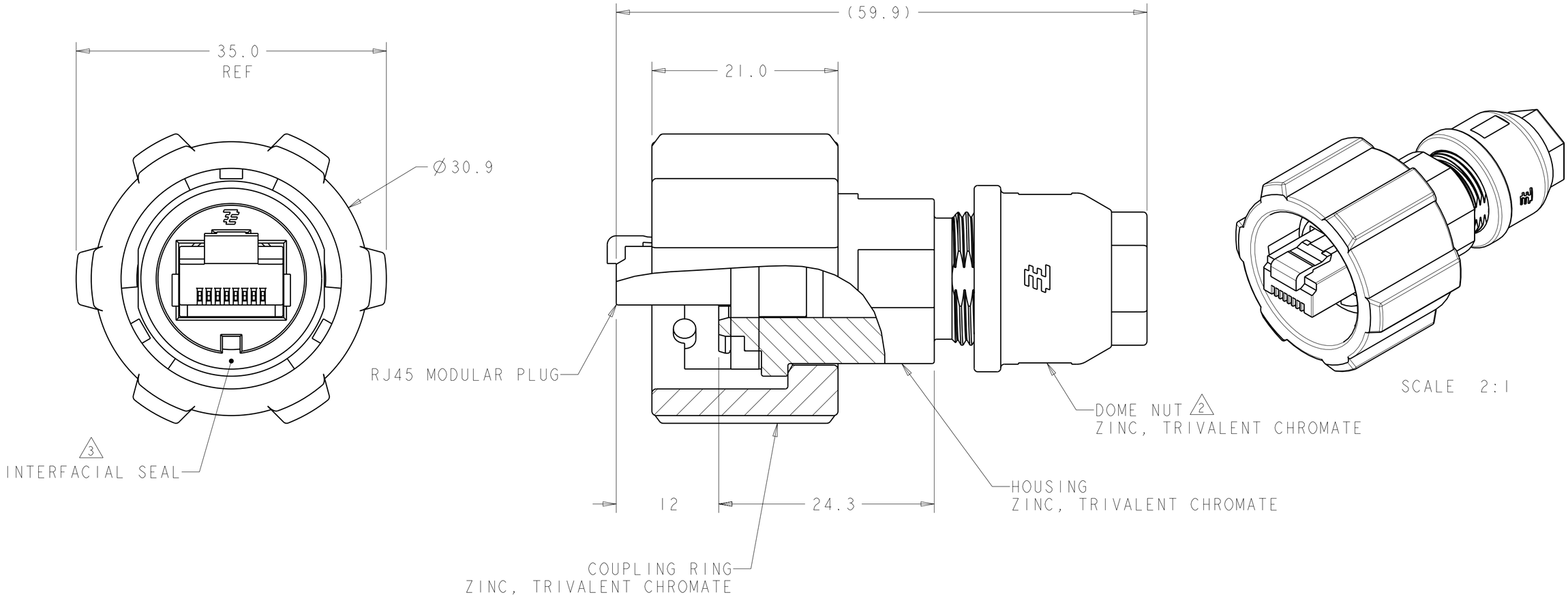

SOLID WIRE	2008611-2
STRANDED WIRE	2008611-1
WIRE TYPE	PART NUMBER

1. CABLE DIAMETER RANGE: Ø4.5 - Ø6.9
2. 36.9 IN-LBS TORQUE RECOMMENDED FOR DOME NUT.
3. INTERFACIAL SEAL IS SECURED TO HOUSING WITH ADHESIVE.

THIS DRAWING IS A CONTROLLED DOCUMENT FOR TYCO ELECTRONICS CORPORATION. IT IS SUBJECT TO CHANGE AND THE CONTROLLING ENGINEERING ORGANIZATION SHOULD BE CONTACTED FOR THE LATEST REVISION.

DIMENSIONS: mm

TOLERANCES UNLESS OTHERWISE SPECIFIED:

0 PLC	±1.0
1 PLC	±0.2
2 PLC	±0.10
3 PLC	±0.000
4 PLC	±0.0000
ANGLES	±1°

MATERIAL -

FINISH -

DWN	S.WELDON	26MAR2008
CHK	C.HERTZLER	26MAR2008
APVD	C.HERTZLER	26MAR2008

PRODUCT SPEC 108-2198

APPLICATION SPEC 114-13136

WEIGHT -

Tyco Electronics

Tyco Electronics
Harrisburg, PA 17105-3608

NAME PLUG KIT, UNSHIELDED, INDUSTRIAL CIRCULAR ETHERNET CONNECTOR

SIZE	CAGE CODE	DRAWING NO	RESTRICTED TO
A2	00779	C-2008611	-

CUSTOMER DRAWING | SCALE 3:1 | SHEET 1 OF 1 | REV A1

AMP 1471-9 REV 31MAR2000

Pro/ENGINEER DRAWING