National Semiconductor

PRELIMINARY

查询"MM74HCT148"供应商

MM54HCT148/MM74HCT148 8–3 Line Priority Encoder

General Description

This priority encoder utilizes advanced silicon-gate CMOS technology. It has the high noise immunity and low power consumption typical of CMOS circuits, as well as the speeds and output drive similar to LS-TTL.

This priority encoder accepts 8 input request lines 0–7 and outputs 3 lines A0–A2. The priority encoding ensures that only the highest order data line is encoded. Cascading circuitry (enable input EI and enable output EO) has been provided to allow octal expansion without the need for external circuitry. All data inputs and outputs are active at the low logic level.

All inputs are protected from damage due to static discharge by internal diode clamps to V_{CC} and ground.

MM54HCT/MM74HCT devices are ntended to interface between TTL and NMOS components and standard CMOS devices. These parts are also plug in replacements for LS-TTL devices and can be used to reduce power consumption in existing designs.

Features

- Typical propagation delays: 13 ns
- Wide supply voltage range: 2V–6V

Connection Diagram

Dual-in-Line Package

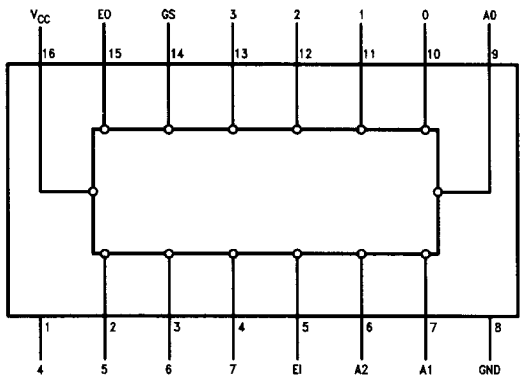

TL/F/9398–1

Order Number MM54HCT148* or MM74HCT148*

*Please look into Section 8, Appendix D for availability of various package types.

Truth Table

Inputs								Outputs				
EI	0	1	2	3	4	5	6	7	A2	A1	A0	GS	EO
H	X	X	X	X	X	X	X	X	H	H	H	H	H
L	H	H	H	H	H	H	H	H	H	H	H	H	L
L	X	X	X	X	X	X	X	L	L	L	L	L	H
L	X	X	X	X	X	X	L	H	L	L	H	L	H
L	X	X	X	X	X	L	H	H	L	H	L	L	H
L	X	X	X	X	L	H	H	H	L	H	H	L	H
L	X	X	X	L	H	H	H	H	H	L	L	L	H
L	X	X	L	H	H	H	H	H	H	L	H	L	H
L	X	L	H	H	H	H	H	H	H	H	L	L	H
L	L	H	H	H	H	H	H	H	H	H	H	L	H

H = High, L = Low, X = Irrelevant

Absolute Maximum Ratings (Notes 1 & 2)

If Military/Aerospace specified devices are required, contact the National Semiconductor Sales Office/ Distributors for availability and specifications.

查询 MM74HC1148 供应商

Supply Voltage (V_{CC})	−0.5V to +7.0V
DC Input Voltage (V_{IN})	−1.5V to V_{CC} +1.5V
DC Output Voltage (V_{OUT})	−0.5V to V_{CC} +0.5V
Clamp Diode Current (I_{IK}, I_{OK})	±20 mA
DC Output Current, per Pin (I_{OUT})	±35 mA
DC V_{CC} or GND Current, per Pin (I_{CC})	±70 mA
Storage Temperature Range (T_{STG})	−65°C to +150°C
Power Dissipation (P_D)	
(Note 3)	600 mW
S.O. Package Only	500 mW
Lead Temperature (T_L)	
(Soldering, 10 sec.)	260°C

Operating Conditions

	Min	Max	Units
Supply Voltage (V_{CC})	4.5	5.5	V
DC Input or Output Voltage (V_{IN}, V_{OUT})	0	V_{CC}	V
Operation Temperature Range (T_A)			
MM74HCT	−40	+85	°C
MM54HCT	−55	+125	°C
Input Rise or Fall Times		500	ns

DC Electrical Characteristics V_{CC} = 5V ±10% (unless otherwise specified)

Symbol	Parameter	Conditions	T_A = 25°C		74HCT T_A = −40°C to +85°C	54HCT T_A = −55°C to +125°C	Units
			Typ	Guaranteed Limits			
V_{IH}	Minimum High Level Input Voltage			2.0	2.0	2.0	V
V_{IL}	Maximum Low Level Input Voltage			0.8	0.8	0.8	V
V_{OH}	Minimum High Level Output Voltage	V_{IN} = V_{IH} or V_{IL}					
		$\|I_{OUT}\|$ = 20 μA	V_{CC}	V_{CC} − 0.1	V_{CC} − 0.1	V_{CC} − 0.1	V
		$\|I_{OUT}\|$ = 4.0 mA, V_{CC} = 4.5V	4.2	3.96	3.84	3.7	V
		$\|I_{OUT}\|$ = 4.8 mA, V_{CC} = 5.5V	5.7	4.98	4.84	4.7	V
V_{OL}	Maximum Low Level Voltage	V_{IN} = V_{IH} or V_{IL}					
		$\|I_{OUT}$ = 20 μA	0	0.1	0.1	0.1	V
		$\|I_{OUT}\|$ = 4.0 mA, V_{CC} = 4.5V	0.2	0.26	0.33	0.4	V
		$\|I_{OUT}\|$ = 4.8 mA, V_{CC} = 5.5V	0.2	0.26	0.33	0.4	V
I_{IN}	Maximum Input Current	V_{IN} = V_{CC} or GND, V_{IH} or V_{IL}		±0.1	±1.0	±1.0	μA
I_{CC}	Maximum Quiescent Supply Current	V_{IN} = V_{CC} or GND I_{OUT} = 0 μA		8.0	80	160	μA
		V_{IN} = 2.4V or 0.5V (Note 4)		2.0	2.9	3.0	mA

Note 1: Absolute Maximum Ratings are those values beyond which damage to the device may occur.

Note 2: Unless otherwise specified all voltages are referenced to ground.

Note 3: Power Dissipation temperature derating—plastic "N" package −12 mW/°C from 65°C to 85°C, ceramic "J" package 12 mW/°C from 100°C to 125°C.

Note 4: Measured per input, other inputs held at V_{CC} or GND.

AC Electrical Characteristics MM54HCT148/MM74HCT148

V_{CC} = 5V ±10%, C_L = 50 pF, t_r = t_f = 6 ns (unless otherwise specified)

查询"MM74HCT148"供应商

Symbol	Parameter	T_A = 25°C		74HCT T_A = −40°C to +85°C	54HCT T_A = −55°C to +125°C	Units
		Typ	Guaranteed Limits			
t_{pd}	Inputs 0–7 to A0, A1, A2	13	23	29	35	ns
t_{pd}	Inputs 0–7 to Output EO	12	22	28	33	ns
t_{pd}	Inputs 0–7 to Output GS	14	26	33	39	ns
t_{pd}	Inputs EI to A0, A1, A2	16	28	36	43	ns
t_{pd}	Input EI to Output GS	11	21	27	32	ns
t_{pd}	Input EI to Output EO	13	23	29	34	ns
t_r, t_f	Maximum Output Rise and Fall Times	7	11	14	17	ns
C_{pd}	Power Dissipation Capacitance (Note 5)	TBD				pF
C_{IN}	Maximum Input Capacitance	5	10	10	10	pF

Note 5: C_{pd} determines the no load dynamic power consumption, and the no load dynamic current consumption.

AC Electrical Characteristics MM54HCT148/MM74HCT148

V_{CC} = 5V, C_L = 15 pF, t_r = t_f = 6 ns (unless otherwise specified)

Symbol	Parameter	T_A = 25°C		Units
		Typ	Guaranteed Limits	
t_{pd}	Inputs 0–7 to A0, A1, A2	12		ns
t_{pd}	Inputs 0–7 to Output EO	11		ns
t_{pd}	Inputs 0–7 to Output GS	13		ns
t_{pd}	Input EI to A0, A1, A2	15		ns
t_{pd}	Input EI to Output GS	11		ns
t_{pd}	Input EI to Output EO	12		ns
t_r, t_f	Maximum Output Rise and Fall Times	4		ns

Logic Diagram

查询"MM74HCT148"供应商

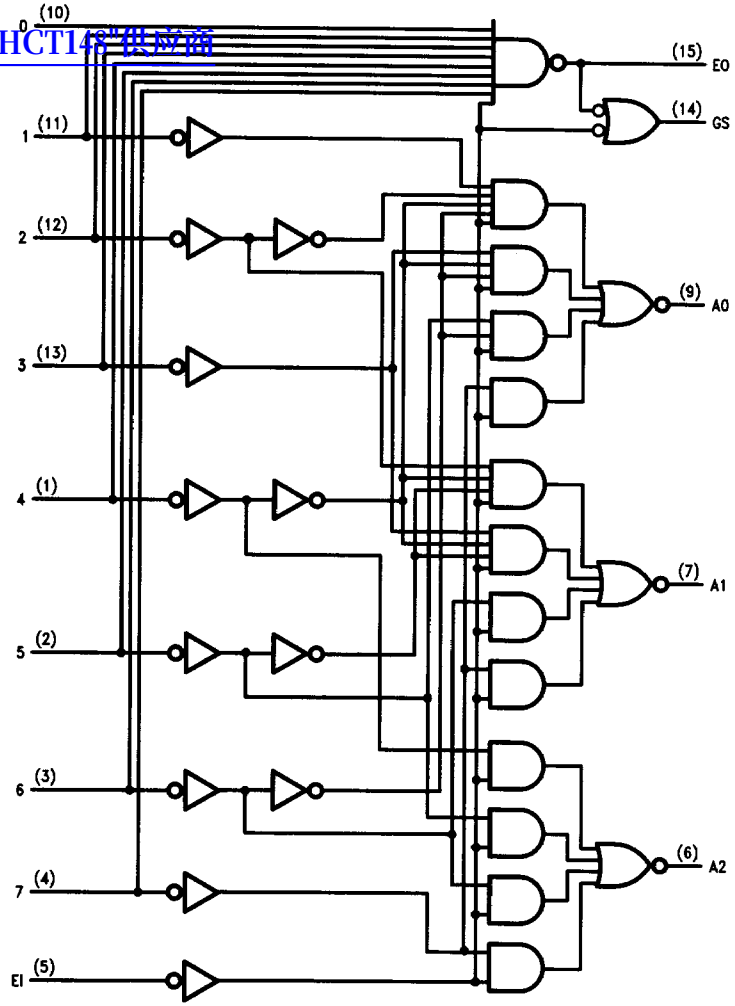

TL/F/9398-2

查询"MM74HCT148"供应商

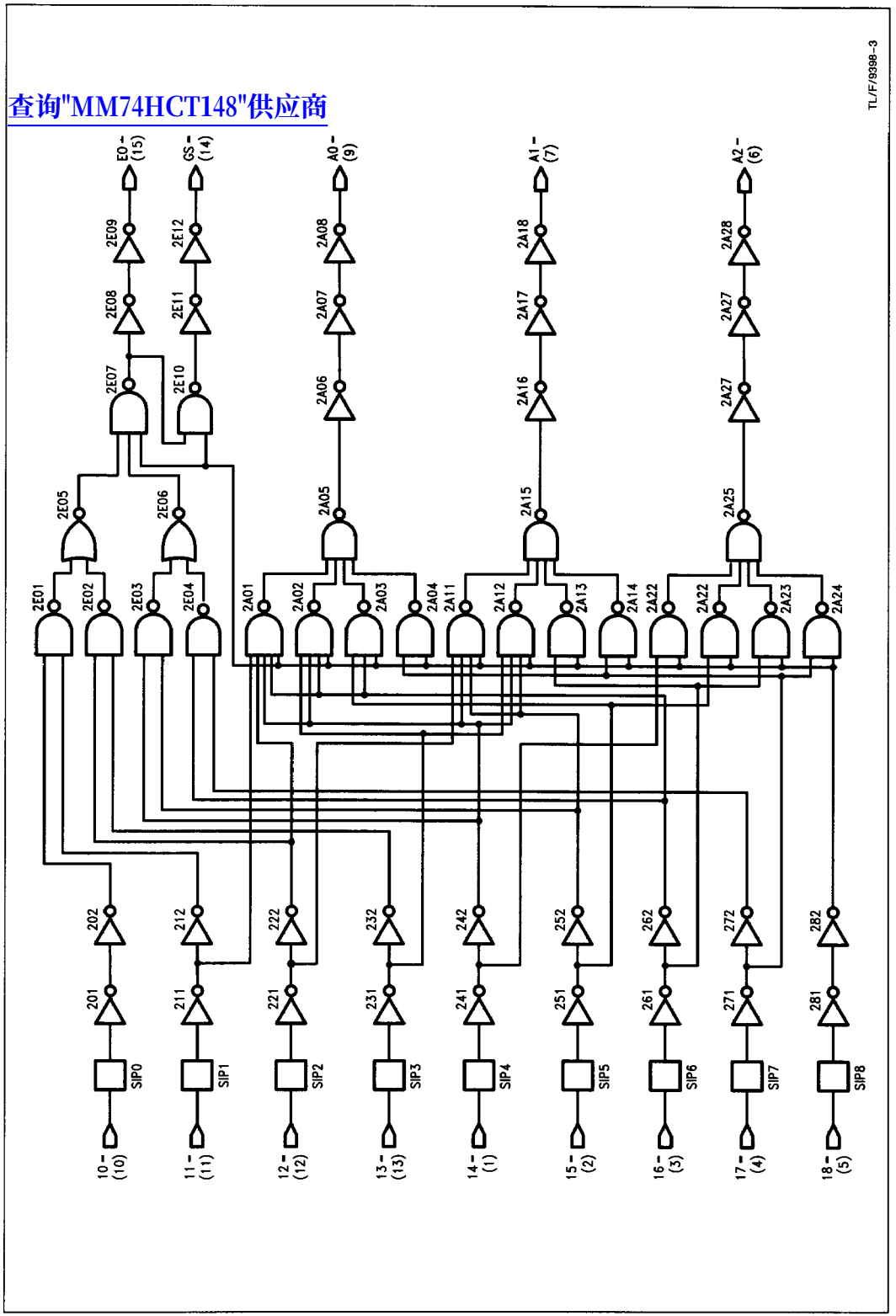

TL/F/9398–3