查询"NLAS4717EPMTR2G"供应商

4.5 Ω High Bandwidth, Dual SPDT Analog Switch

The NLAS4717EP is an advanced CMOS analog switch fabricated in sub−micron silicon gate CMOS technology. The device is a dual independent Single Pole Double Throw (SPDT) switch featuring low $R_{DS(on)}$ of 4.5 Ω at 3.0 V.

The device also features guaranteed Break−Before−Make (BBM) switching, assuring the switches never short the driver.

The NLAS4717EP is available in two small size packages:

Microbump: 2.0 x 1.5 mm
WQFN−10: 1.4 x 1.8 mm

Features

- Low $R_{DS(on)}$: 4.5 Ω @ 3.0 V
- Matching Between the Switches ±0.5 Ω
- Wide Voltage Range: 1.8 V to 5.5 V
- High Bandwidth > 90 MHz
- 1.65 V to 5.5 V Operating Range
- Low Threshold Voltages on Pins 4 and 8 (CTRL Pins)
- Ultra−Low Charge Injection ≤ 6.0 pC
- Low Standby Current: I_{CC} = 1.0 nA (Max) @ T_A = 25°C
- *OVT on Pins 4 and 8 (CTRL Logic Pins)
- These are Pb−Free Devices

Typical Applications

- Cell Phones
- PDAs
- MP3s
- Digital Still Cameras
- USB 2.0 Full Speed (USB1.1) − 12 Mbps Compliant

Important Information

- ESD Protection:
  HBM = 2500 V, MM = 200 V
- Latchup Max Rating: 200 mA (Per JEDEC EIA/JESD78)
- Pin−to−Pin Compatible with MAX4717

*OVT

- Overvoltage Tolerant (OVT) specific pins operate higher than normal supply voltages, with no damage to the devices or to signal integrity.

ON Semiconductor®

http://onsemi.com

MARKING DIAGRAMS

A1

Microbump−10
CASE 489AA

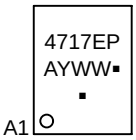

A = Assembly Location
Y = Year
W, WW = Work Week
▪ = Pb−Free Package
(Note: Microdot may be in either location)

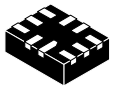

1

WQFN−10
CASE 488AQ

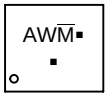

AW = Specific Device Code
M = Date Code
▪ = Pb−Free Device
(Note: Microdot may be in either location)

FUNCTION TABLE

IN_	NO_	NC_
0	OFF	ON
1	ON	OFF

ORDERING INFORMATION

Device	Package	Shipping†
NLAS4717EPFCT1G	Microbump−10 (Pb−Free)	3000 / Tape & Reel
NLAS4717EPMTR2G	WQFN−10 (Pb−Free)	3000 / Tape & Reel

†For information on tape and reel specifications, including part orientation and tape sizes, please refer to our Tape and Reel Packaging Specifications Brochure, BRD8011/D.

© Semiconductor Components Industries, LLC, 2006

March, 2006 − Rev. 5
Publication Order Number:
NLAS4717EP/D

查询"NLAS4717EPMTR2G"供应商

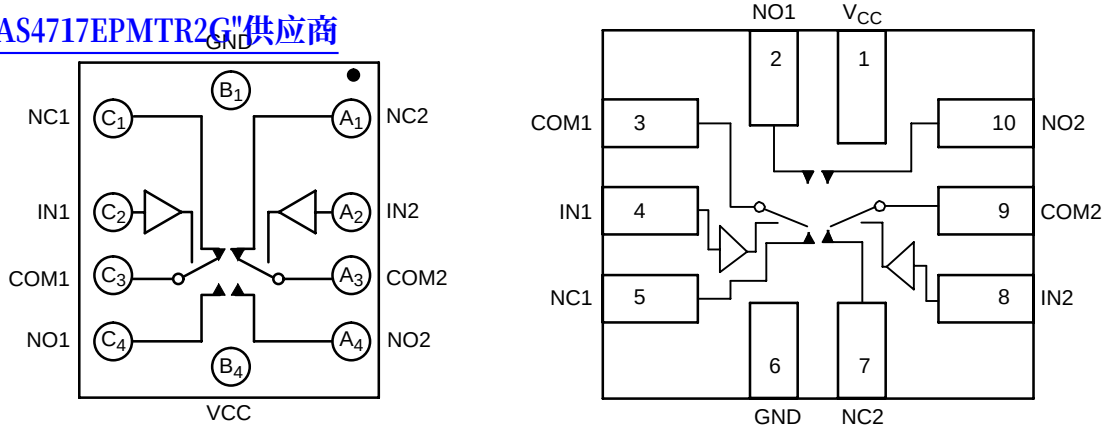

Microbump
(Top View)

WQFN
(Top View)

Figure 1. Device Circuit Diagrams and Pin Configurations

MAXIMUM RATINGS

Symbol	Parameter	Value	Unit
V+	DC Supply Voltage	−0.5 to +7.0	V
V_{IS}	Analog Input Voltage (V_{NO}, V_{NC}, or V_{COM}) (Note 1)	$-0.5 \le V_{IS} \le V_{CC} + 0.5$	V
V_{IN}	Digital Select Input Voltage	$-0.5 \le V_I \le +7.0$	V
I_{IK}	DC Current, Into or Out of Any Pin (Continuous)	±100	mA
I_{PK}	Peak Current (10% Duty Cycle)	±200	mA

Maximum ratings are those values beyond which device damage can occur. Maximum ratings applied to the device are individual stress limit values (not normal operating conditions) and are not valid simultaneously. If these limits are exceeded, device functional operation is not implied, damage may occur and reliability may be affected.

1. Signal voltage on NC, NO, and COM exceeding VCC or GND are clamped by the internal diodes. Limit forward diode current to maximum current rating.

RECOMMENDED OPERATING CONDITIONS

Symbol	Parameter		Min	Max	Unit
V+	DC Supply Voltage		1.8	5.5	V
V_{IN}	Digital Select Input Voltage		GND	5.5	V
V_{IS}	Analog Input Voltage (NC, NO, COM)		GND	V_{CC}	V
T_A	Operating Temperature Range		−40	+85	°C
t_r, t_f	Input Rise or Fall Time, SELECT	V_{CC} = 3.3 V ± 0.3 V V_{CC} = 5.0 V ± 0.5 V	0 0	100 20	ns/V

查询"NLAS4717EPMTR2G"供应商

ANALOG SWITCH DC CHARACTERISTICS

Symbol	Parameter	Condition	V_{CC} (V)	−40°C to +85°C		Unit
				Min	Max	
V_{IH}	Input Logic High Voltage	V_{OUT} = 0.1 V $I_{OUT} \le 20\ \mu A$	1.65 to 2.2 2.7 to 3.6 4.5 to 5.5	V_{CC} x 0.55 V_{CC} x 0.5 2.0	− − −	V
V_{IL}	Input Logic Low Voltage	$V_{OUT} = -V_{CC} - 0.1$ V $I_{OUT} \le 20\ \mu A$	1.65 to 2.2 2.7 to 3.6 4.5 to 5.5	− − −	V_{CC} x 0.2 V_{CC} x 0.2 0.8	V
I_{IN}	Input Leakage Current	$V_{IN} = V_{CC}$ or GND	5.5	−100	+100	nA
V_{CC}	Power Supply Range	All	−	1.65	5.5	V
I_{CC}	Supply Current	$V_{IN} = V_{CC}$ or GND $I_{OUT} = 0\ \mu A$	1.8 3.3 5.5	− − −	1.0 1.0 1.0	μA

ANALOG SWITCH CHARACTERISTICS − Digital Section (Voltages Referenced to GND)

Symbol	Parameter	Condition	V_{CC} (V)	−40°C to +85°C			Unit
				Min	Typ	Max	
R_{ON}	ON Resistance (Note 2)	I_{COM} = 10 mA V_{IS} = 0 to V_{CC}	3.0	−	3.2	4.5	Ω
			5.0	−	2.1	3.5	
ΔR_{ON}	ON Resistance Match Between Channels (Note 2 and 3)	I_{COM} = 10 mA V_{IS} = 0 to V_{CC}	3.0	−	0.1	0.4	Ω
			5.0	−	0.1	0.4	
$R_{FLAT[ON]}$	ON Resistance Flatness (Note 4)	I_{COM} = 10 mA V_{IS} = 0 to V_{CC}	3.0	−	1.12	1.5	Ω
			5.0	−	0.55	1.36	
$I_{NO_[OFF]}$ $I_{NC_[OFF]}$	NO_, NC_ Off−Leakage Current (Note 5)	V_{COM} = 0.3 V or 3.3 V V_{NO} or V_{NC} = 0.3 V or 3.3 V	3.6	−1.0	0.01	+1.0	nA
		V_{COM} = 0 V or 5.0 V V_{NO} or V_{NC} = 0 V or 5.0 V	5.5	−1.0	0.01	+1.0	
$I_{COM_[ON]}$	COM_ On−Leakage Current (Note 5)	V_{COM} = 0.3 V or 3.3 V V_{NO} or V_{NC} = 0.3 V or 3.3 V	3.6	−2.0	0.01	+2.0	nA
		V_{COM} = 0 V or 5.0 V V_{NO} or V_{NC} = 0 V or 5.0 V	5.5	−2.0	0.01	+2.0	

查询"NLAS4717EPMTR2G"供应商

ANALOG SWITCH AC CHARACTERISTICS

Symbol	Parameter	Condition	V_{CC} (V)	−40°C to +85°C			Unit
				Min	Typ	Max	
t_{ON}	Turn−On Time	$V_{NC_}$, $V_{NO_}$ = V_{IH} or V_{IL} R_L = 300 Ω, C_L = 35 pF $V_{IN[x]}$ = V_{IH} or V_{IL}	1.8 to 5.5	−	−	30	nS
t_{OFF}	Turn−Off Time	$V_{NC_}$, $V_{NO_}$ = V_{IH} or V_{IL} R_L = 300 Ω, C_L = 35 pF $V_{IN[x]}$ = V_{IH} or V_{IL}	1.8 to 5.5	−	−	40	nS
t_{BBM}	Break−Before−Make Time Delay (Note 5)	$V_{NC_}$, $V_{NO_}$ = 1.5 V R_L = 300 Ω, C_L = 35 pF	−	−	8.0	−	nS
t_{SKEW}	Skew (Note 5)	R_S = 39 Ω, C_L = 50 pF	−	−	0.15	2.0	nS

2. R_{ON} characterized for V_{CC} range (1.65 V to 5.5 V).
3. $\Delta R_{ON} = R_{ON}(MAX) - R_{ON}(MIN)$.
4. $R_{FLAT[ON]} = R_{ON}(MAX) - R_{ON}(MIN)$, measured over V_{CC} range.
5. Guaranteed by design.

ANALOG SWITCH APPLICATION CHARACTERISTICS

Symbol	Parameter	Condition	V_{CC} (V)	−40°C to +85°C			Unit
				Min	Typ	Max	
Q	Charge Injection	V_{IN} = V_{CC} to GND R_{In} = 0 Ω, C_L = 1.0 nF Q = C_L − ΔV_{OUT}	3.0 5.0		6.0 9.0		pC
VISO	Off−Isolation	f = 10 MHz $V_{NO_}$, $V_{NC_}$ = 1.0 Vp−p R_L = 50 Ω, C_L = 5.0 pF	1.65 to 5.5		−70		dB
		f = 1.0 MHz $V_{NO_}$, $V_{NC_}$ = 1.0 Vp−p R_L = 50 Ω, C_L = 5.0 pF			−110		
VCT	Cross−Talk	f = 10 MHz $V_{NO_}$, $V_{NC_}$ = 1.0 Vp−p R_L = 50 Ω, C_L = 5.0 pF	1.65 to 5.5		−35		dB
		f = 1.0 MHz $V_{NO_}$, $V_{NC_}$ = 1.0 Vp−p R_L = 50 Ω, C_L = 5.0 pF			−53		
BW	On−Channel −3.0 db Bandwidth	Signal = 0 dB R_L = 50 Ω, C_L = 5.0 pF	1.8 to 5.0		90		MHz
THD	Total Harmonic Distortion	V_{COM} = 2.0 Vp−p, RL = 600 Ω, T_A = 25°C	−		0.02		%
$C_{NO_[OFF]}$ $C_{NC_[OFF]}$	NO_, NC_ OFF−Capacitance	F = 1.0 MHz	−		15		pF
$C_{NO_[ON]}$ $C_{NC_[ON]}$	NO_, NC_ ON−Capacitance	F = 1.0 MHz	−		38		pF

查询"NLAS4717EPMTR2G"供应商

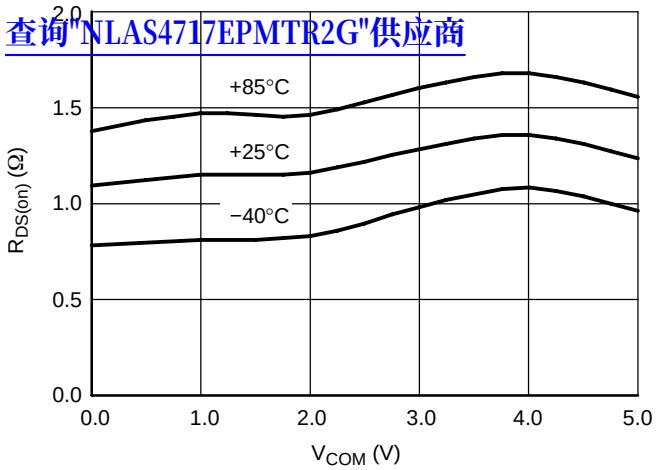

Figure 2. $R_{DS(on)}$ @ V_{CC} = 5.0 V

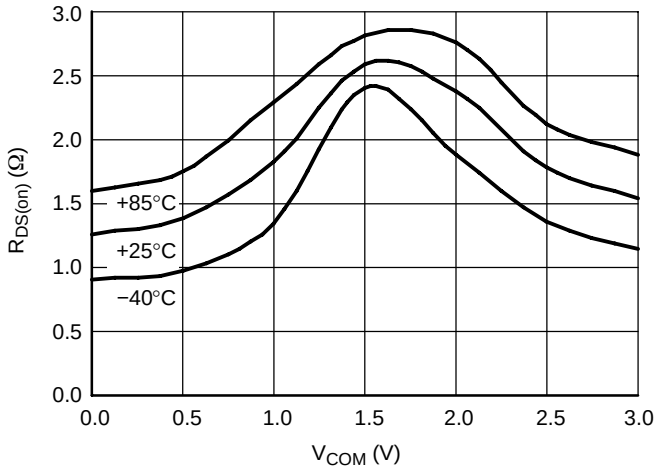

Figure 3. $R_{DS(on)}$ @ V_{CC} = 3.0 V

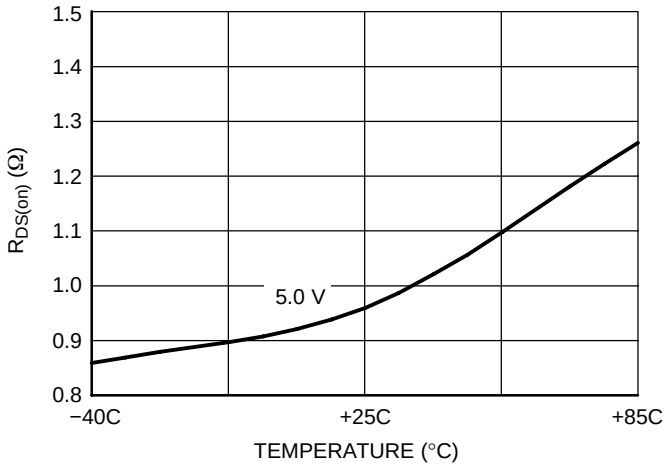

Figure 4. Delta $R_{DS(on)}$ @ V_{CC} = 5.0 V

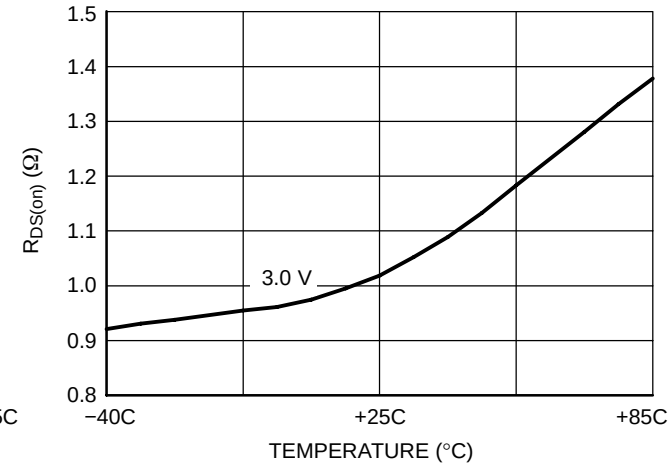

Figure 5. Delta $R_{DS(on)}$ @ V_{CC} = 3.0 V

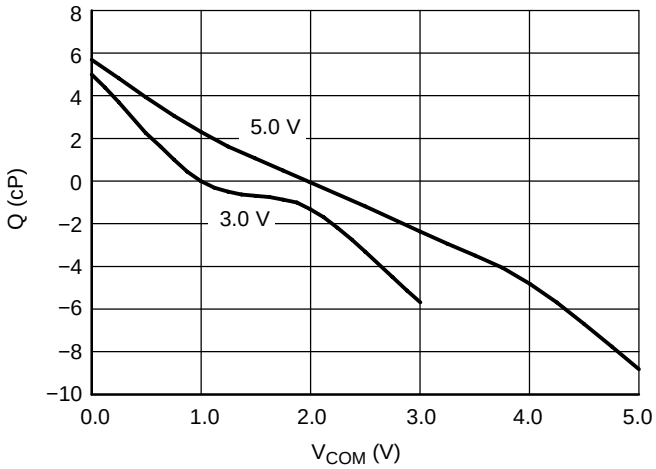

Figure 6. Charge Injection

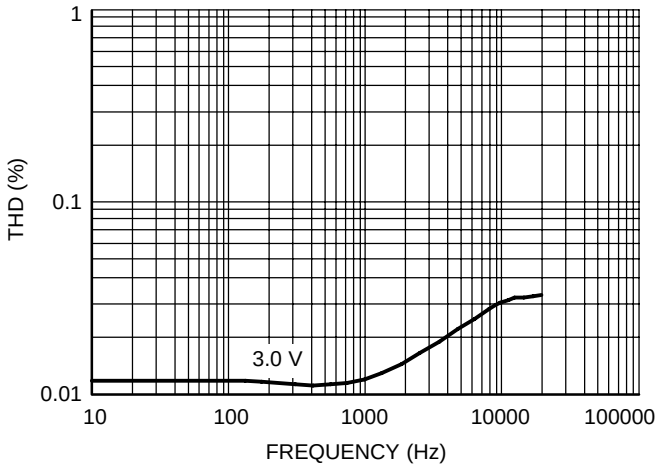

Figure 7. Total Harmonic Distortion

查询"NLAS4717FPMTR2G"供应商

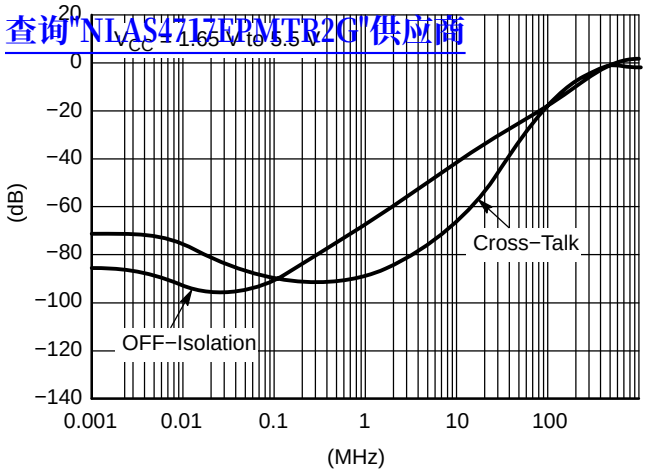

Figure 8. Frequency Response

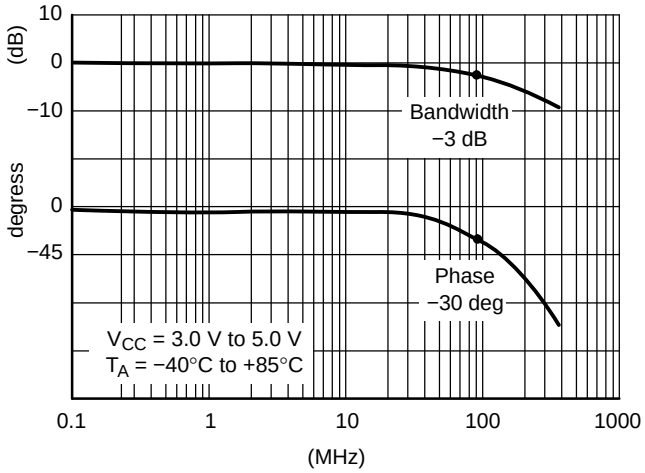

Figure 9. Bandwidth and Phase

查询"NLAS4717EPMTR2G"供应商

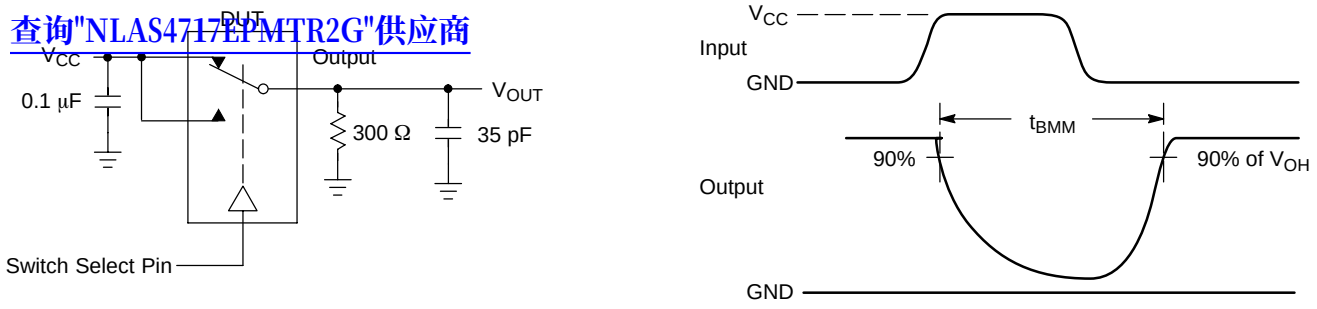

Figure 10. t_{BBM} (Time Break−Before−Make)

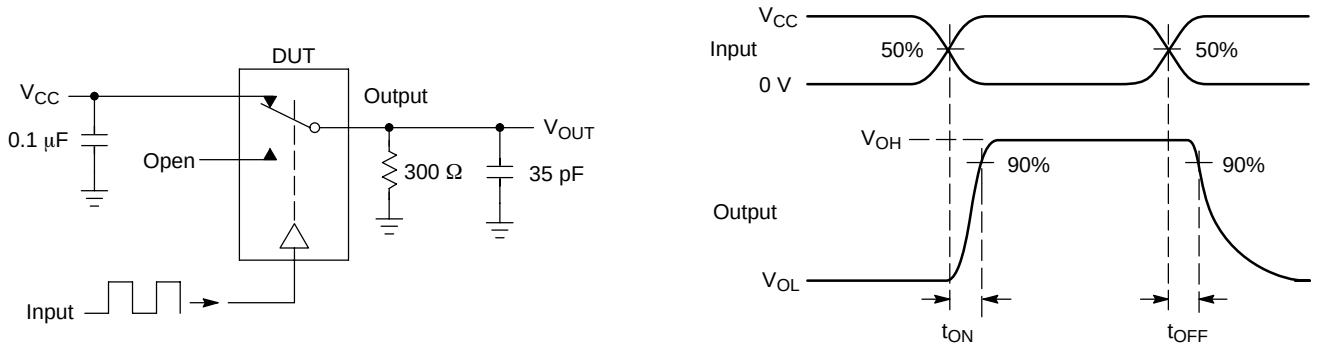

Figure 11. t_{ON}/t_{OFF}

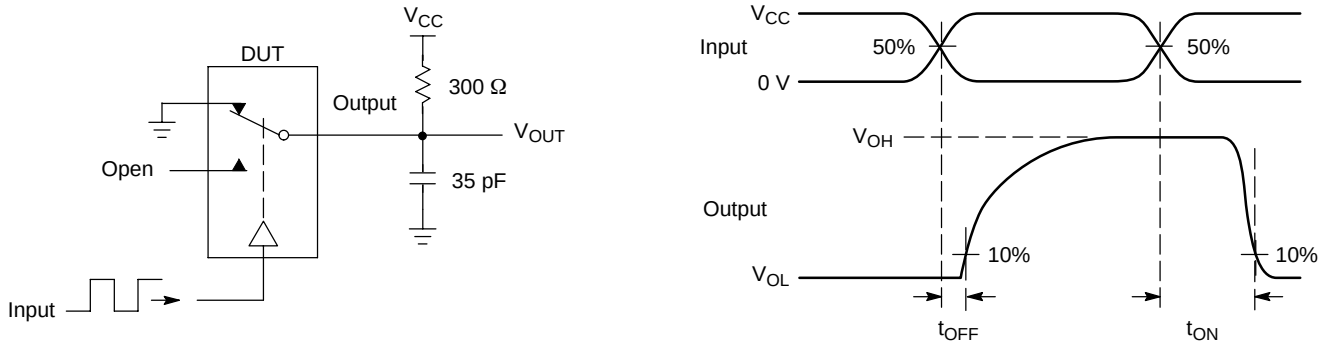

Figure 12. t_{ON}/t_{OFF}

查询"NLAS4717EPMTR2G"供应商

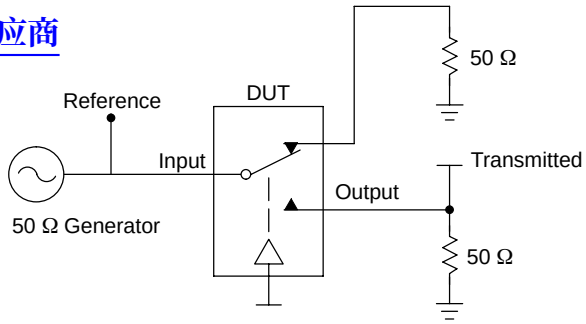

Channel switch control/s test socket is normalized. Off isolation is measured across an off channel. On loss is the bandwidth of an On switch. V_{ISO}, Bandwidth and V_{ONL} are independent of the input signal direction.

V_{ISO} = Off Channel Isolation = 20 Log $\left(\frac{V_{OUT}}{V_{IN}}\right)$ for V_{IN} at 100 kHz

V_{ONL} = On Channel Loss = 20 Log $\left(\frac{V_{OUT}}{V_{IN}}\right)$ for V_{IN} at 100 kHz to 50 MHz

Bandwidth (BW) = the frequency 3.0 dB below V_{ONL}
V_{CT} = Use V_{ISO} setup and test to all other switch analog input/outputs terminated with 50 Ω

Figure 13. Off Channel Isolation/On Channel Loss (BW)/Crosstalk (On Channel to Off Channel)/V_{ONL}

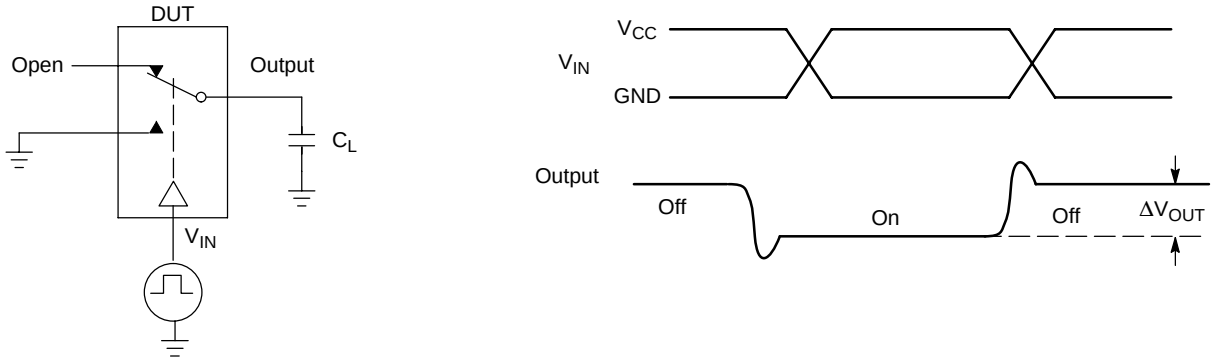

Figure 14. Charge Injection: (Q)

查询"NLAS4717EPMTR2G"供应商

PACKAGE DIMENSIONS

Microbump−10
CASE 489AA−01
ISSUE A

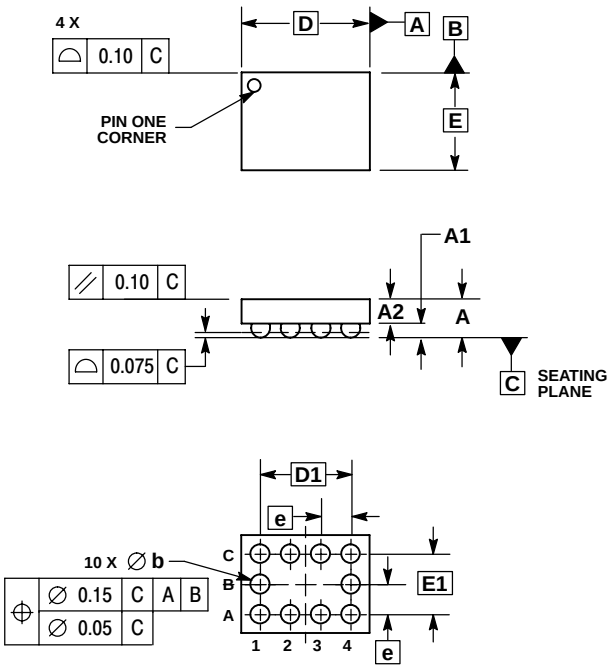

NOTES:
1. DIMENSIONING AND TOLERANCING PER ASME Y14.5M, 1994.
2. CONTROLLING DIMENSION: MILLIMETERS.
3. COPLANARITY APPLIES TO SPHERICAL CROWNS OF SOLDER BALLS.

DIM	MILLIMETERS MIN	MAX
A	−−−	0.650
A1	0.210	0.270
A2	0.280	0.380
D	1.965 BSC	
E	1.465 BSC	
b	0.250	0.350
e	0.500 BSC	
D1	1.500 BSC	
E1	1.000 BSC	

查询"NLAS4717EPMTR2G"供应商

PACKAGE DIMENSIONS

WQFN10, 1.4x1.8x0.4P
CASE 488AQ−01
ISSUE B

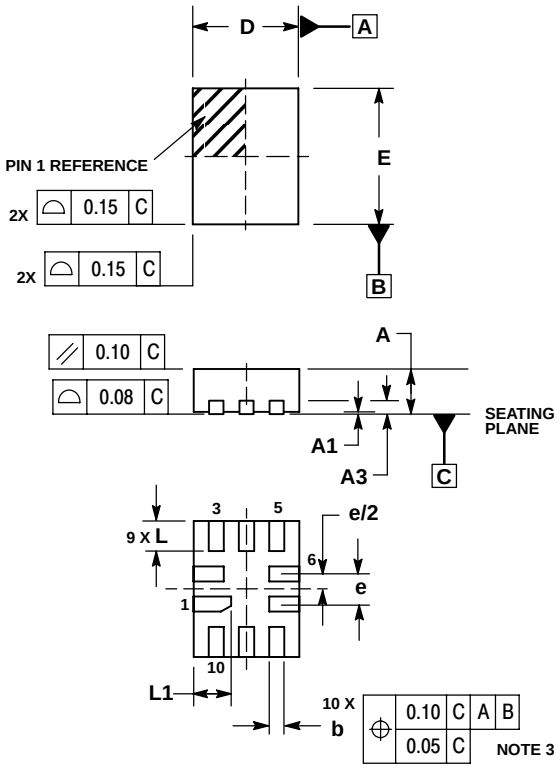

NOTES:
1. DIMENSIONING AND TOLERANCING PER ASME Y14.5M, 1994.
2. CONTROLLING DIMENSION: MILLIMETERS
3. DIMENSION b APPLIES TO PLATED TERMINAL AND IS MEASURED BETWEEN 0.25 AND 0.30 MM FROM TERMINAL.
4. COPLANARITY APPLIES TO THE EXPOSED PAD AS WELL AS THE TERMINALS.
5. EXPOSED PADS CONNECTED TO DIE FLAG. USED AS TEST CONTACTS.

	MILLIMETERS	
DIM	MIN	MAX
A	0.70	0.80
A1	0.00	0.050
A3	0.20 REF	
b	0.15	0.25
D	1.40 BSC	
E	1.80 BSC	
e	0.40 BSC	
L	0.30	0.50
L1	0.40	0.60

MOUNTING FOOTPRINT

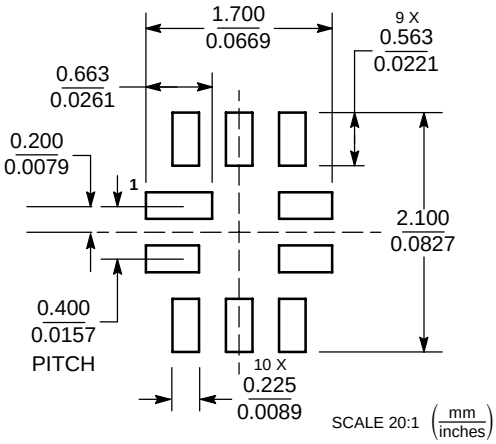

ON Semiconductor and are registered trademarks of Semiconductor Components Industries, LLC (SCILLC). SCILLC reserves the right to make changes without further notice to any products herein. SCILLC makes no warranty, representation or guarantee regarding the suitability of its products for any particular purpose, nor does SCILLC assume any liability arising out of the application or use of any product or circuit, and specifically disclaims any and all liability, including without limitation special, consequential or incidental damages. “Typical” parameters which may be provided in SCILLC data sheets and/or specifications can and do vary in different applications and actual performance may vary over time. All operating parameters, including “Typicals” must be validated for each customer application by customer’s technical experts. SCILLC does not convey any license under its patent rights nor the rights of others. SCILLC products are not designed, intended, or authorized for use as components in systems intended for surgical implant into the body, or other applications intended to support or sustain life, or for any other application in which the failure of the SCILLC product could create a situation where personal injury or death may occur. Should Buyer purchase or use SCILLC products for any such unintended or unauthorized application, Buyer shall indemnify and hold SCILLC and its officers, employees, subsidiaries, affiliates, and distributors harmless against all claims, costs, damages, and expenses, and reasonable attorney fees arising out of, directly or indirectly, any claim of personal injury or death associated with such unintended or unauthorized use, even if such claim alleges that SCILLC was negligent regarding the design or manufacture of the part. SCILLC is an Equal Opportunity/Affirmative Action Employer. This literature is subject to all applicable copyright laws and is not for resale in any manner.

PUBLICATION ORDERING INFORMATION

LITERATURE FULFILLMENT:
Literature Distribution Center for ON Semiconductor
P.O. Box 61312, Phoenix, Arizona 85082−1312 USA
Phone: 480−829−7710 or 800−344−3860 Toll Free USA/Canada
Fax: 480−829−7709 or 800−344−3867 Toll Free USA/Canada
Email: orderlit@onsemi.com

N. American Technical Support: 800−282−9855 Toll Free USA/Canada

Japan: ON Semiconductor, Japan Customer Focus Center
2−9−1 Kamimeguro, Meguro−ku, Tokyo, Japan 153−0051
Phone: 81−3−5773−3850

ON Semiconductor Website: http://onsemi.com

Order Literature: http://www.onsemi.com/litorder

For additional information, please contact your local Sales Representative.