查询"LB1962"供应商

SINGLE-PHASE FULL-WAVE MOTOR DRIVER IC

DESCRIPTION

The UTC LB1962 is a Single-phase full-wave motor driver designed specially for small DC fans. For example, CPU cooling fans.

FEATURES

* Wide operating voltage 5V or12V are both acceptable
* Built-in Hall amplifier and Hall bias circuit.
* Built-in lockup and thermal protection with automatic recovery circuits
* Rotation detection output
* start/stop pin for standby mode control.

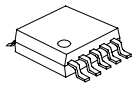

MSOP-10

*Pb-free plating product number: LB1962L

PIN CONFIGURATION

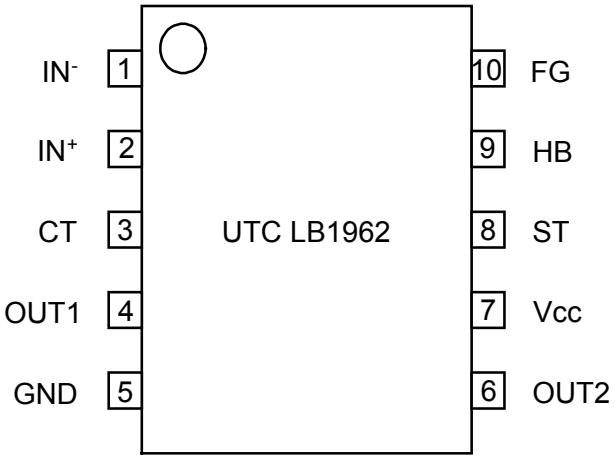

查询"LB1962"供应商

BLOCK DIAGRAM

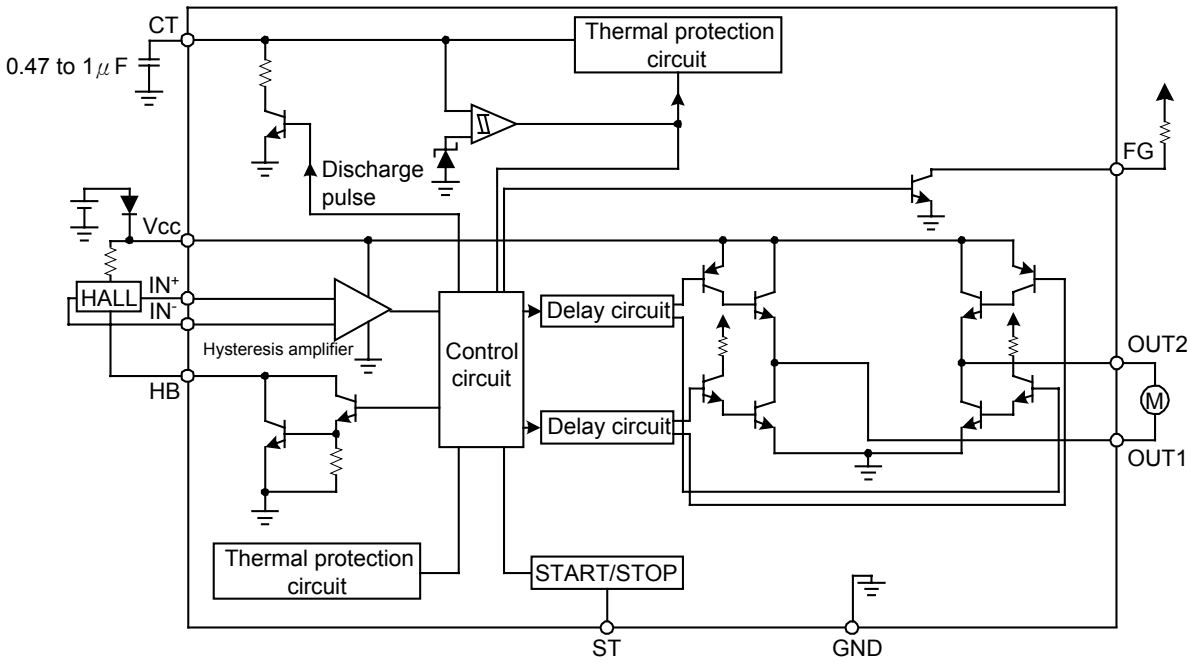

ABSOLUTE MAXIMUM RATINGS

(Ta=25℃)

PARAMETER	SYMBOL	RATINGS	UNIT
Maximum Supply voltage	V_{CC}(max)	17	V
Maximum Output current	I_{OUT}(max)	0.5	A
Maximum Output withstand voltage	V_{OUT}(max)	15	V
Maximum output withstand voltage	V_F(max)	17	V
Maximum output current	I_F(max)	5	mA
	I_R(max)	5	mA
HB maximum output current	I_B(max)	10	mA
ST maximum input voltage	V_{ST}(max)	15	V
Allowable power dissipation (With specified substrate*)	P_D	850	mW
Operating Temperature Range	T_{OPR}	-30 ~ +85	℃
Storage Temperature Range	T_{STG}	-40 ~ +150	℃

*Specified substrate: 114.3×76.2×1.5mm^3 glass epoxy.

RECOMMANDED OPERATING RATINGS

(Ta=25℃)

PARAMETER	SYMBOL	RATINGS	UNIT
Power supply voltage	V_{CC}	3.8 ~ 16.8	V
ST input High level voltage	ST_H	3 ~ 14	V
ST input Low level voltage	ST_L	-0.3 ~ +0.4	V
Hall input common mode voltage range	V_{ICM}	0.2 ~ Vcc-1.5	V

查询"LB1962"供应商

ELECTRICAL CHARACTERISTICS

(Ta=25℃, V_{CC}=5V)

PARAMETER	SYMBOL	TEST CONDITIONS	MIN	TYP	MAX	UNIT
Current drain	I_{CC}	In drive mode (CT= [L] , ST= [L])		6.5	9.1	mA
		In lockup protection mode (CT= [H] , ST= [L])		2.2	3.1	mA
		In standby mode (ST= [H])		110	150	μA
Lockup detection Capacitor charge current	I_{CT}^1		1.9	2.8	3.7	μA
Capacitor discharge current	I_{CT}^2		0.32	0.46	0.60	μA
Capacitor charge/discharge current ratio	R_{CT}	$R_{CD}=I_{CT}^1/I_{CT}^2$	5.0	6.0	7.0	
CT charge voltage	V_{CT}^1		2.55	2.75	2.95	V
CT discharge voltage	V_{CT}^2		1.6	1.8	2.0	V
Output Low level voltage	V_{OL}	I_O=200mA		0.2	0.3	V
Output High level voltage	V_{OH}	I_O=200mA	3.9	4.1		V
Hall input sensitivity	V_{HN}	Zero peak value (Including offset and hysteresis)		7	15	mV
Output pin Low voltage	V_{FG}	I_{RD}, I_{FG}=5mA		0.1	0.3	V
Output pin leakage current	I_{FGL}	V_{RD}, V_{FG}=15V			30	μA
HB output Low voltage	V_{HBL}	I_{HB}=5mA		1.0	1.3	V
ST pin input current	I_{ST}	V_{ST}=5V		75	100	μA

TRUTH TABLE

ST	IN^-	IN^+	CT	OUT1	OUT2	FG	HB	Mode
H				off	off	off	off	Standby
L	H	L	L	H	L	H	L	Rotating
	L	H		L	H	L		
			H	off	off		L	Lockup protection activated

查询"LB1962"供应商

DESIGN REFERENCE

(1) V_{CC} pin

Power supply pin for whole I_C.

(2) OUT1, OUT2 pins

Single-phase coil output pins.

Bipolar forward or reverse drive output determined by OUT1 or OUT2 high. Built-in regenerative circuit that regenerates kickback current between lower side NPN outputs if a diode is used for protection against reverse connection.

(3) IN^-, IN^+ pins

Hall signal input pins

The Hall signal is amplified into a square wave by the Hall amplifier with hysteresis characteristics of ±3.5 mV (typ.). The Hall signal amplitude should be 70 mV or more.

(4) CT pin

This pin serves timing capacitor connecting pin between CT and GND.

The capacitor determines timing of the built-in lockup protection circuit for preventing coil burnout when motor is locked. Once normal motor rotating condition is restored, the automatic recovery circuit will reset itself.

Adjusting the capacitance alters the lockup detection time.

When a 0.47 mF capacitor is connected between CT and GND

Lockup detection time	:approx. 0.5s
Lockup protection time/automatic recovery time	:approx. 0.16s (output ON)
	:approx. 1s (output OFF)

Connecting this pin to ground when lockup function is not used

(6) FG pin

Open-collector output pin for rotation frequency detection.

When IN^- = High and IN^+ = Low, then FG = Low

When IN^- = Low and IN^+ = High, then FG = High

(7) ST pin and HB pin

ST pin: When input to this pin is High, motor drive is stopped (OUT is high impedance).

HB pin: Hall bias switching pin. At ST pin High input, Hall bias is switched to reduce current drain in fan standby mode.

If not used, both pins should be open.

(8) Thermal protection circuit

When junction temperature Tj of IC is or over about 150℃, output current limiter is activated to protect against damage.

查询"LB1962"供应商

SAMPLE APPLICATION CIRCUIT

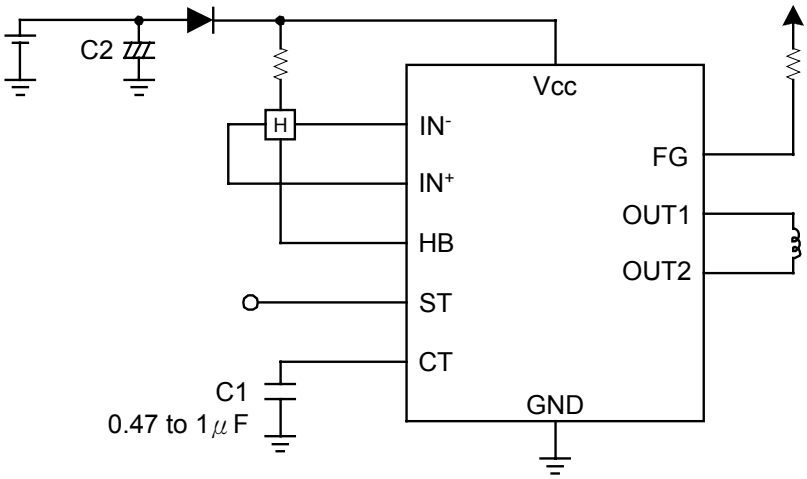

Startup

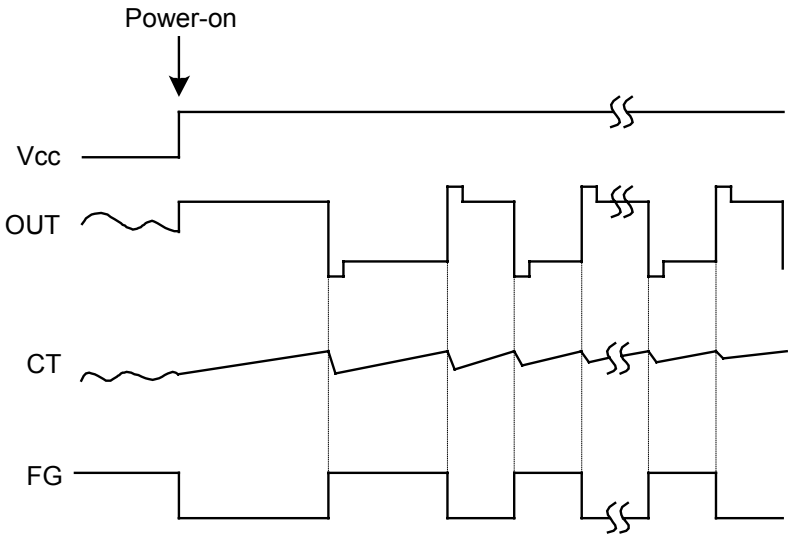

查询"LB1962"供应商

Locked-up protection and automatic recovery curves

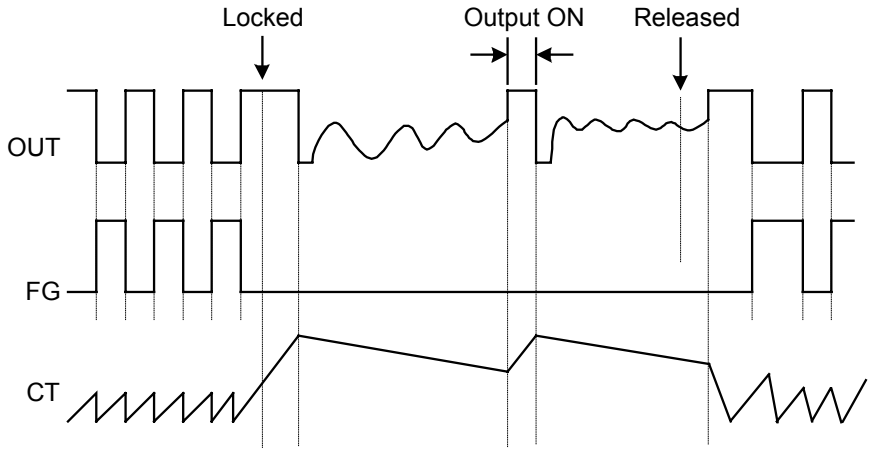

Start or stop curve

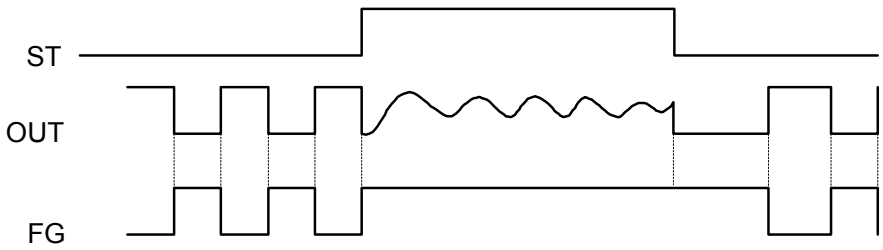

TYPICAL CHARACTERISTION

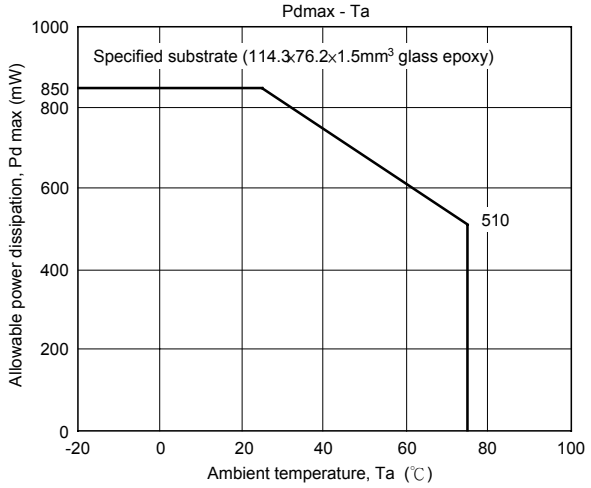

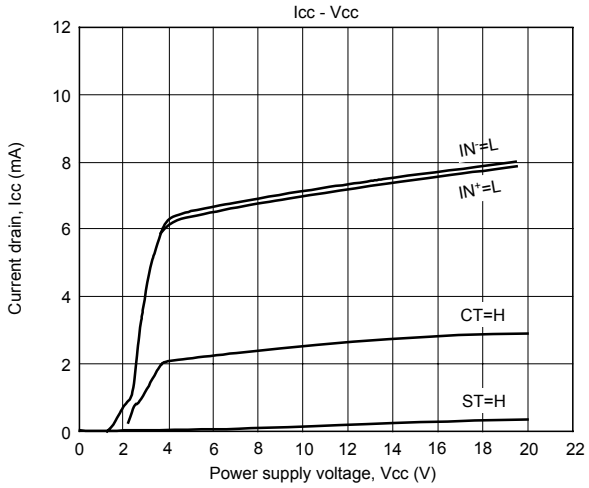

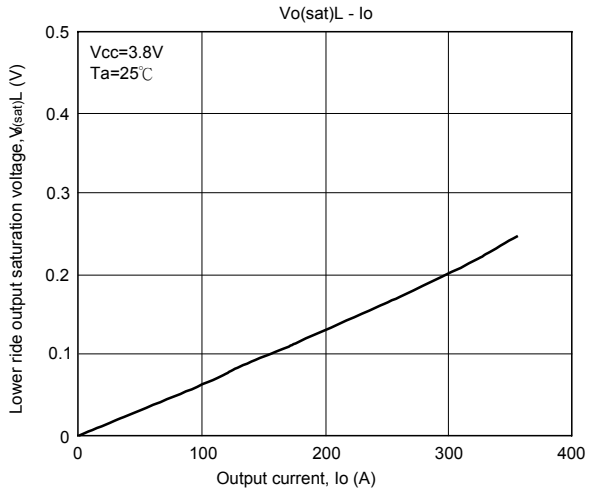

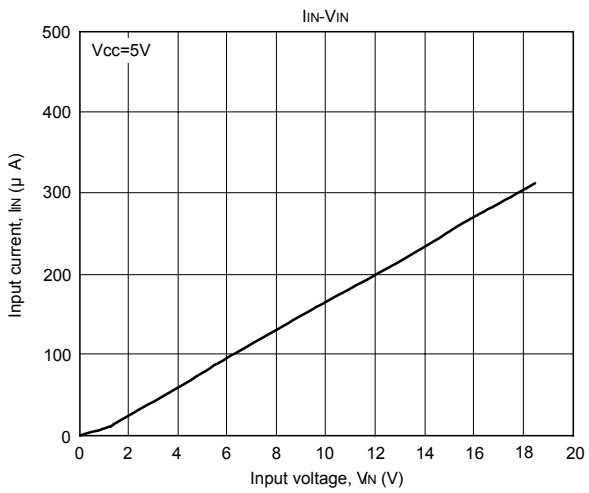

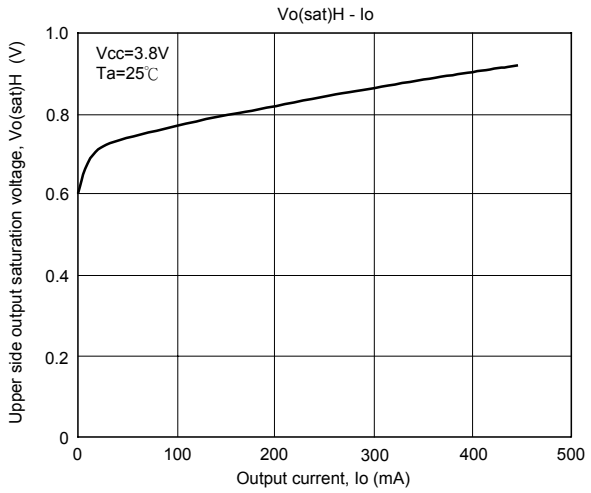

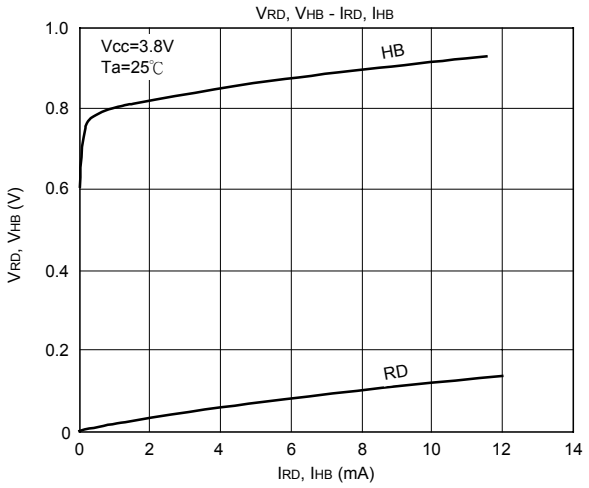

查询"LB1962"供应商

UTC assumes no responsibility for equipment failures that result from using products at values that exceed, even momentarily, rated values (such as maximum ratings, operating condition ranges, or other parameters) listed in products specifications of any and all UTC products described or contained herein. UTC products are not designed for use in life support appliances, devices or systems where malfunction of these products can be reasonably expected to result in personal injury. Reproduction in whole or in part is prohibited without the prior written consent of the copyright owner. The information presented in this document does not form part of any quotation or contract, is believed to be accurate and reliable and may be changed without notice.