查询"LMP8645"供应商

National Semiconductor

July 1, 2010

LMP8645/LMP8645HV

Precision High Voltage Current Sense Amplifier

General Description

The LMP8645 and the LMP8645HV are precision current sense amplifiers that detect small differential voltages across a sense resistor in the presence of high input common mode voltages with a supply voltage range from 2.7V to 12V.

The LMP8645 accepts input signals with common mode voltage range from -2V to 42V, while the LMP8645HV accepts input signal with common mode voltage range from -2V to 76V. The LMP8645 and LMP8645HV have adjustable gain for applications where supply current and high common mode voltage are the determining factors. The gain is configured with a single resistor, providing a high level of flexibility, the accuracy could be as low as 2% (max) including the gain setting resistor. The output is buffered in order to provide low output impedance. This high side current sense amplifier is ideal for sensing and monitoring currents in DC or battery powered systems, excellent AC and DC specifications over temperature, and keeps errors in the current sense loop to a minimum. The LMP8645 is an ideal choice for industrial, automotive and consumer applications, and it is available in TSOT-6 package.

Features

Typical values, T_A = 25°C

- High common-mode voltage range
  - — LMP8645 -2V to 42V
  - — LMP8645HV -2V to 76V
- Supply voltage range 2.7V to 12V
- Gain configurable with a single resistor
- Max variable gain accuracy (with external resistor) 2.0%
- Transconductance 200 µA/V
- Low offset voltage 1 mV
- Input bias 12 µA
- PSRR 90 dB
- CMRR 95 dB
- Temperature range –40°C to 125°C
- 6-Pin TSOT Package

Applications

- High-side current sense
- Vehicle current measurement
- Motor controls
- Battery monitoring
- Remote sensing
- Power management

Typical Application

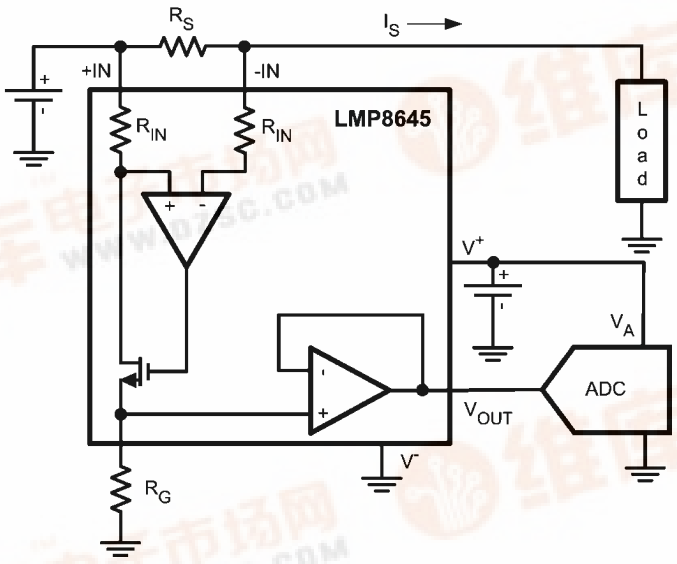

30071632

LMP™ is a trademark of National Semiconductor Corporation.

© 2010 National Semiconductor Corporation

pdf.dzsc.com

查询"LMP8645"供应商

Absolute Maximum Ratings (Note 1)

If Military/Aerospace specified devices are required, please contact the National Semiconductor Sales Office/ Distributors for availability and specifications.

ESD Tolerance (Note 2)	
Human Body Model	
For input pins +IN, -IN	±5000V
For all other pins	±2000V
Machine Model	200V
Charge device model	1250V
Supply Voltage (V_S = V+ - V−)	13.2V
Differential voltage +IN- (-IN)	6V
Voltage at pins +IN, -IN	
LMP8645HV	-6V to 80V
LMP8645	-6V to 60V
Voltage at R_G pin	13.2V
Voltage at OUT pin	V- to V+
Storage Temperature Range	-65°C to 150°C
Junction Temperature (Note 3)	150°C
For soldering specifications, see product folder at www.national.com and www.national.com/ms/MS/MS-SOLDERING.pdf	

Operating Ratings (Note 1)

Supply Voltage (V_S = V+ - V−)	2.7V to 12V
Temperature Range (Note 3)	-40°C to 125°C
Package Thermal Resistance(Note 3)	
TSOT-6	96°C/W

2.7V Electrical Characteristics (Note 4)

Unless otherwise specified, all limits guaranteed for at T_A = 25°C, V_S=V+ – V-, V+ = 2.7V, V− = 0V, –2V < V_{CM} < 76V, R_G= 25kΩ, R_L = 10 MΩ. **Boldface** limits apply at the temperature extremes.

Symbol	Parameter	Condition	Min (Note 6)	Typ (Note 5)	Max (Note 6)	Units
V_{OS}	Input Offset Voltage	V_{CM} = 2.1V	-1 **-1.7**		1 **1.7**	mV
TCV_{OS}	Input Offset Voltage Drift(Note 7, Note 9)	V_{CM} = 2.1V			7	µV/°C
I_B	Input Bias Current(Note 10)	V_{CM} = 2.1V		12	20	µA
e_{ni}	Input Voltage Noise (Note 9)	f > 10 kHz, R_G = 5 kΩ		120		nV/√Hz
$V_{SENSE(MAX)}$	Max Input Sense Voltage (Note 9)	V_{CM} = 12V, R_G = 5 kΩ		600		mV
Gain A_V	Adjustable Gain Setting (Note 9)	V_{CM} = 12V	1		100	V/V
Gm	Transconductance	V_{CM} = 2.1V		200		µA/V
	Accuracy	V_{CM} = 2.1V	-2 **-3.4**		2 **3.4**	%
	Gm drift(Note 9)	–40°C to 125°C, V_{CM}=2.1V			140	ppm /°C
PSRR	Power Supply Rejection Ratio	V_{CM} = 2.1V, 2.7V < V+ < 12V	90			dB
CMRR	Common Mode Rejection Ratio	LMP8645HV 2.1V < V_{CM} < 76V LMP8645 2.1V < V_{CM}< 42V	95			dB
		-2V <V_{CM} < 2V	60			
BW	–3 dB Bandwidth (Note 9)	R_G = 10 kΩ,, C_G = 4 pF V_{SENSE} = 400 mV, C_L = 30 pF ,R_L= 1MΩ		990		kHz
		R_G = 25 kΩ, C_G = 4 pF, V_{SENSE} = 200 mV, C_L = 30 pF, R_L = 1MΩ		260		
		Rg = 50kΩ, C_G = 4 pF, V_{SENSE} = 100 mV, C_L = 30 pF, R_L = 1MΩ		135		
SR	Slew Rate(Note 8, Note 9)	V_{CM} =5V, C_G = 4 pF, V_{SENSE} from 25 mV to 175 mV, C_L = 30 pF, R_L = 1MΩ		0.5		V/µs
I_S	Supply Current	V_{CM} = 2.1V		380	525 **710**	uA
		V_{CM} = –2V		2000	2500 **2700**	
V_{OUT}	Maximum Output Voltage	V_{CM} = 2.1V, Rg= 500 kΩ	1.2			V
	Minimum Output Voltage	V_{CM} = 2.1V			20	mV

查询"LMP8645"供应商

Symbol	Parameter	Condition	Min (Note 6)	Typ (Note 5)	Max (Note 6)	Units
I_{OUT}	Output current (Note 9)	Sourcing, V_{OUT}= 600mV, Rg = 150kΩ		5		mA
		Sinking, V_{OUT}= 600mV, Rg = 150kΩ		5		
C_{LOAD}	Max Output Capacitance Load (Note 9)			30		pF

5V Electrical Characteristics (Note 4)

Unless otherwise specified, all limits guaranteed for at T_A = 25°C, V_S=V+-V-, V+ = 5V, V− = 0V, −2V < V_{CM} < 76V, R_g= 25kΩ, R_L = 10 MΩ. **Boldface** limits apply at the temperature extremes.

Symbol	Parameter	Condition	Min (Note 6)	Typ (Note 5)	Max (Note 6)	Units
V_{OS}	Input Offset Voltage	V_{CM} = 2.1V	-1 **-1.7**		1 **1.7**	mV
TCV_{OS}	Input Offset Voltage Drift(Note 7, Note 9)	V_{CM} = 2.1V			7	μV/°C
I_B	Input Bias Current(Note 10)	V_{CM} = 2.1V		12.5	22	μA
e_{ni}	Input Voltage Noise (Note 9)	f > 10 kHz, R_G = 5 kΩ		120		nV/√Hz
$V_{SENSE(MAX)}$	Max Input Sense Voltage (Note 9)	V_{CM} = 12V, R_G = 5 kΩ		600		mV
Gain A_V	Adjustable Gain Setting (Note 9)	V_{CM} = 12V	1		100	V/V
Gm	Transconductance	V_{CM} = 2.1V		200		μA/V
	Accuracy	V_{CM} = 2.1V	-2 **-3.4**		2 **3.4**	%
	Gm drift (Note 9)	−40°C to 125°C, V_{CM}= 2.1V			140	ppm /°C
PSRR	Power Supply Rejection Ratio	V_{CM} = 2.1V, , 2.7V < V+ < 12V	90			dB
CMRR	Common Mode Rejection Ratio	LMP8645HV 2.1V <V_{CM} < 76V LMP8645 2.1V <V_{CM}< 42V	95			dB
		-2V < V_{CM} < 2V	60			
BW	−3 dB Bandwidth (Note 9)	R_G= 10 kΩ, C_G = 4 pF V_{SENSE} = 400 mV, C_L = 30 pF, R_L = 1MΩ		850		kHz
		R_G= 25 kΩ, C_G = 4 pF, V_{SENSE} = 300 mV, C_L = 30 pF, R_L = 1MΩ		260		
		R_G= 50 kΩ, C_G = 4 pF, V_{SENSE} = 300mV, C_L = 30 pF, R_L = 1MΩ		140		
SR	Slew Rate(Note 8, Note 9)	V_{CM} = 5V, C_G = 4 pF, V_{SENSE} from 100 mV to 500 mV, C_L = 30 pF, R_L= 1MΩ		0.5		V/μs
I_S	Supply Current	V_{CM} = 2.1V		450	610 **780**	uA
		V_{CM} = −2V		2100	2800 **3030**	
V_{OUT}	Maximum Output Voltage	V_{CM} =5V, Rg= 500 kΩ	3.3			V
	Minimum Output Voltage	V_{CM} =2.1V			22	mV
I_{OUT}	Output current (Note 9)	Sourcing, V_{OUT}= 1.65V, Rg= 150kΩ		5		mA
		Sinking, V_{OUT}= 1.65V, Rg= 150kΩ		5		
C_{LOAD}	Max Output Capacitance Load (Note 9)			30		pF

查询"LMP8645"供应商

12V Electrical Characteristics (*Note 4*)

Unless otherwise specified, all limits guaranteed for at T_A = 25°C, V_S=V+-V-, V+ = 12V, V− = 0V, −2V < V_{CM} < 76V, R_g= 25kΩ, R_L = 10 MΩ. **Boldface** limits apply at the temperature extremes.

Symbol	Parameter	Condition	Min (*Note 6*)	Typ (*Note 5*)	Max (*Note 6*)	Units
V_{OS}	Input Offset Voltage	V_{CM} = 2.1V	-1 **-1.7**		1 **1.7**	mV
TCV_{OS}	Input Offset Voltage Drift(*Note 7*, *Note 9*)	V_{CM} = 2.1V			7	μV/°C
I_B	Input Bias Current(*Note 10*)	V_{CM} = 2.1V		13	23	μA
e_{ni}	Input Voltage Noise (*Note 9*)	f > 10 kHz, R_G = 5 kΩ		120		nV/√Hz
$V_{SENSE(MAX)}$	Max Input Sense Voltage(*Note 9*)	V_{CM} =12V, R_G = 5 kΩ		600		mV
Gain A_V	Adjustable Gain Setting (*Note 9*)	V_{CM} = 12V	1		100	V/V
Gm	Transconductance	V_{CM} = 2.1V		200		μA/V
	Accuracy	V_{CM} = 2.1V	-2 **-3.4**		2 **3.4**	%
	Gm drift (*Note 9*)	−40°C to 125°C, V_{CM} =2.1V			140	ppm /°C
PSRR	Power Supply Rejection Ratio	V_{CM} =2.1V, 2.7V <V+ < 12V	90			dB
CMRR	Common Mode Rejection Ratio	LMP8645HV 2.1V <V_{CM} < 76V LMP8645 2.1V <V_{CM}< 42V	95			dB
		−2V <V_{CM} < 2V	60			
BW	−3 dB Bandwidth (*Note 9*)	R_G = 10 kΩ, C_G = 4 pF V_{SENSE} = 400 mV, C_L = 30 pF, R_L= 1MΩ		860		kHz
		R_G = 25 kΩ, C_G = 4 pF, V_{SENSE} = 400 mV, C_L = 30 pF, R_L= 1MΩ		260		
		R_G = 50 kΩ, C_G = 4 pF, V_{SENSE} =400 mV, C_L = 30 pF, R_L= 1MΩ		140		
SR	Slew Rate(*Note 8*, *Note 9*)	V_{CM} = 5V, C_G = 4 pF, V_{SENSE} from 100 mV to 500 mV, C_L = 30 pF, R_L=1MΩ		0.6		V/μs
I_S	Supply Current	V_{CM} = 2.1V		555	765 **920**	uA
		V_{CM} = −2V		2200	2900 **3110**	
V_{OUT}	Maximum Output Voltage	V_{CM} = 12V, R_G= 500kΩ	10.2			V
	Minimum Output Voltage	V_{CM} = 2.1V			24	mV
I_{OUT}	Output current (*Note 9*)	Sourcing, V_{OUT}= 5.25V, Rg= 150kΩ		5		mA
		Sinking, V_{OUT}= 5.25V, Rg= 150kΩ		5		
C_{LOAD}	Max Output Capacitance Load (*Note 9*)			30		pF

Note 1: Absolute Maximum Ratings indicate limits beyond which damage to the device may occur. Operating Ratings indicate conditions for which the device is intended to be functional, but specific performance is not guaranteed. For guaranteed specifications and the test conditions, see the Electrical Characteristics Tables.

Note 2: Human Body Model, applicable std. MIL-STD-883, Method 3015.7. Machine Model, applicable std. JESD22-A115-A (ESD MM std. of JEDEC) Field-Induced Charge-Device Model, applicable std. JESD22-C101-C (ESD FICDM std. of JEDEC).

Note 3: The maximum power dissipation must be derated at elevated temperatures and is dictated by $T_{J(MAX)}$, θ_{JA}, and the ambient temperature, T_A. The maximum allowable power dissipation $P_{DMAX} = (T_{J(MAX)} - T_A)/\theta_{JA}$ or the number given in Absolute Maximum Ratings, whichever is lower.

Note 4: Electrical Table values apply only for factory testing conditions at the temperature indicated. Factory testing conditions result in very limited self-heating of the device such that $T_J = T_A$. No guarantee of parametric performance is indicated in the electrical tables under conditions of internal self-heating where $T_J > T_A$.

Note 5: Typical values represent the most likely parametric norm at the time of characterization. Actual typical values may vary over time and will also depend on the application and configuration. The typical values are not tested and are not guaranteed on shipped production material.

Note 6: All limits are guaranteed by testing, design, or statistical analysis.

Note 7: Offset voltage temperature drift is determined by dividing the change in V_{OS} at the temperature extremes by the total temperature change.

Note 8: The number specified is the average of rising and falling slew rates and measured at 90% to 10%.

Note 9: This parameter is guaranteed by design and/or characterization and is not tested in production.

Note 10: Positive Bias Current corresponds to current flowing into the device.

查询 LMP8645 供应商

查询"LMP8645"供应商

Block Diagram

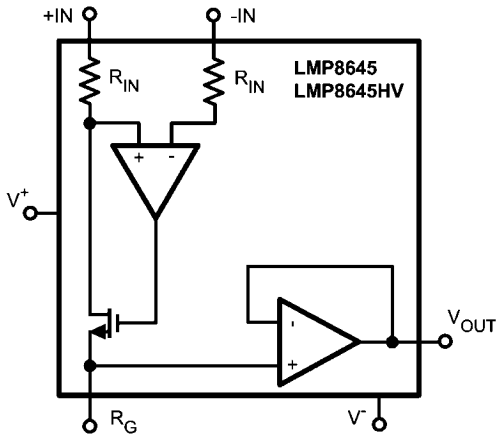

30071630

Connection Diagram

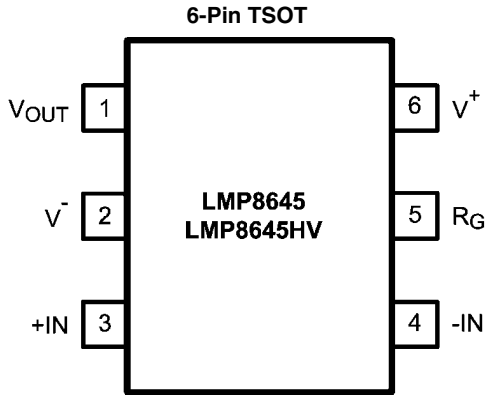

30071602

Top View

Pin Descriptions

Pin	Name	Description
1	V_{OUT}	Single Ended Output
2	V-	Negative Supply Voltage
3	+IN	Positive Input
4	-IN	Negative Input
5	R_G	External Gain Resistor
6	V+	Positive Supply Voltage

Ordering Information

查询"LMP8645"供应商

Package	Part Number	Package Marking	Transport Media	NSC Drawing
6-Pin TSOT	LMP8645MK	AJ6A	1k Units Tape and Reel	MK06A
	LMP8645MKE		250 Units Tape and Reel	
	LMP8645MKX		3k Units Tape and Reel	
	LMP8645HVMK	AK6A	1k Units Tape and Reel	
	LMP8645HVMKE		250 Units Tape and Reel	
	LMP8645HVMKX		3k Units Tape and Reel	

查询"LMP8645"供应商

Typical Performance Characteristics

Unless otherwise specified: T_A = 25°C, V_S=V^+-V^-, V_{SENSE}= +IN - -IN, R_g = 164MΩ

Supply Curent vs. Supply Voltage

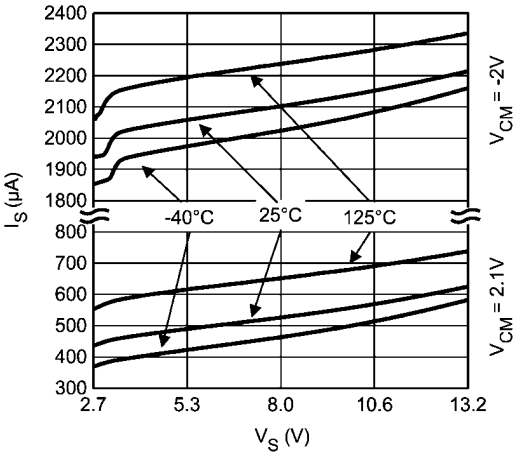

30071625

Supply current vs. V_{CM}

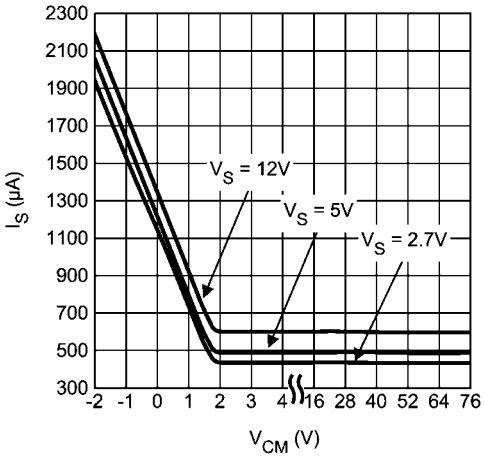

30071626

AC PSRR vs. Frequency

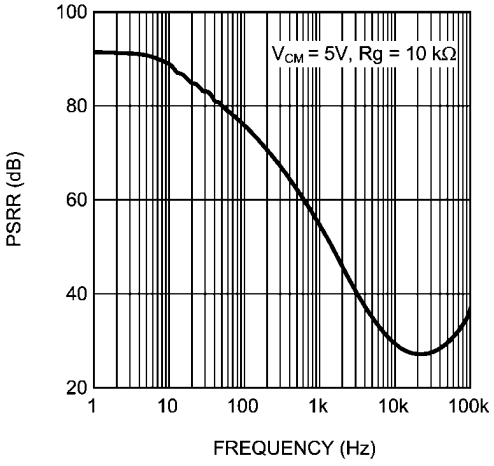

30071612

AC CMRR vs. Frequency

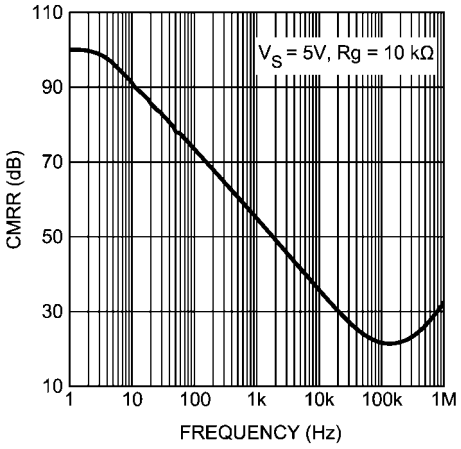

30071613

Gain vs. Frequency

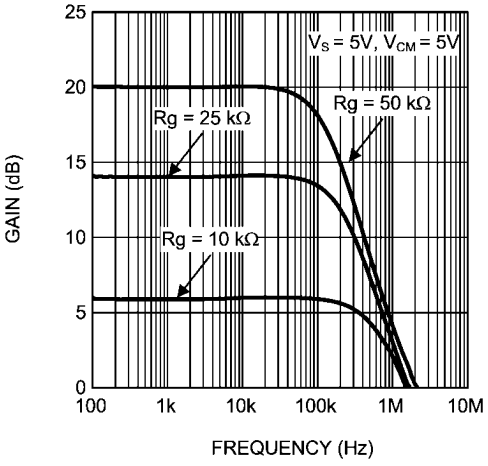

30071614

CMRR vs. V_{CM}

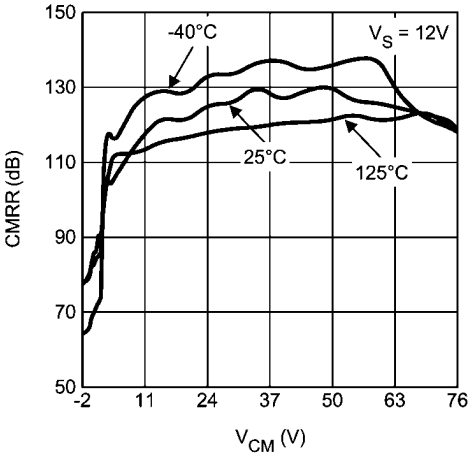

30071624

查询"LMP8645"供应商

Output voltage vs. V_{SENSE}

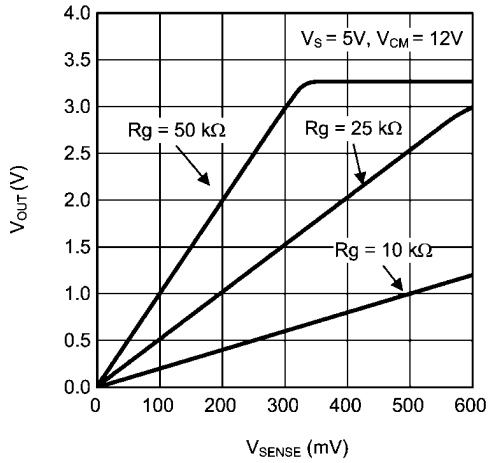

30071616

Output voltage vs. V_{SENSE} (ZOOM close to 0V)

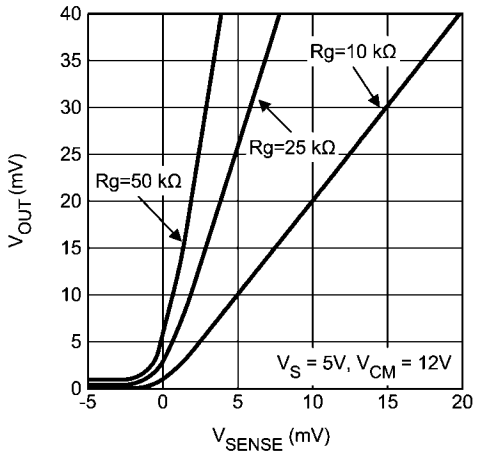

30071617

Large Step response

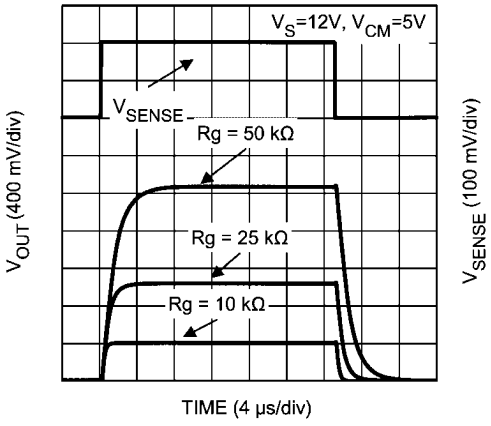

30071618

Small Step response

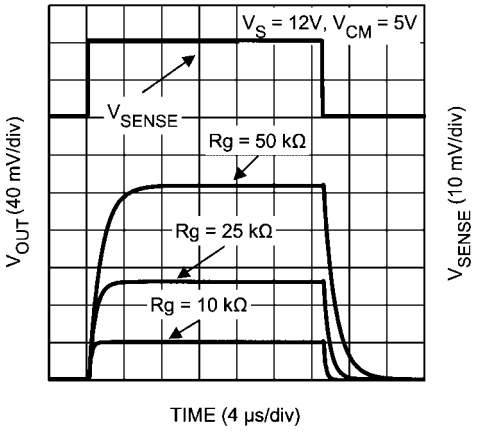

30071619

Settling time (rise)

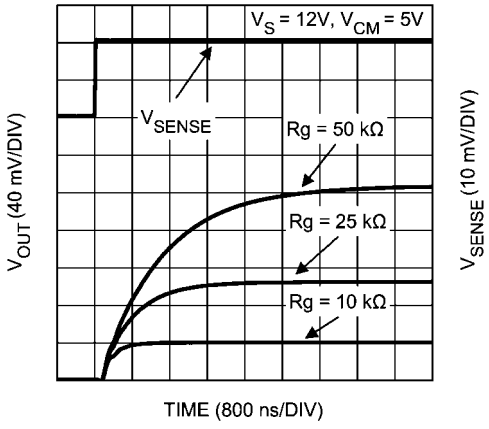

30071621

Settling time (fall)

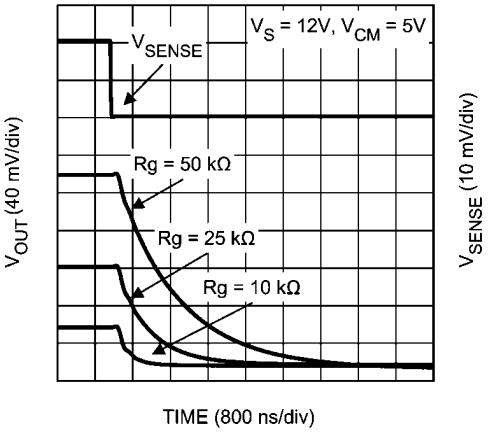

30071620

查询"LMP8645"供应商

Common mode step response (rise)

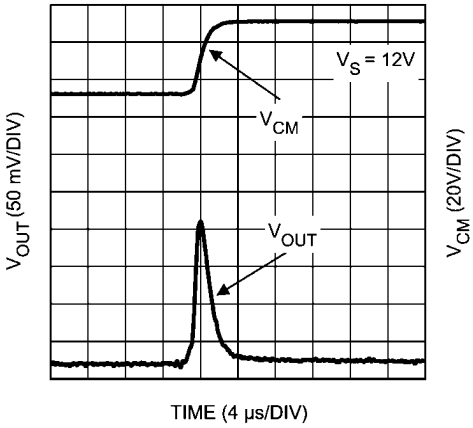

30071622

Common mode step response (fall)

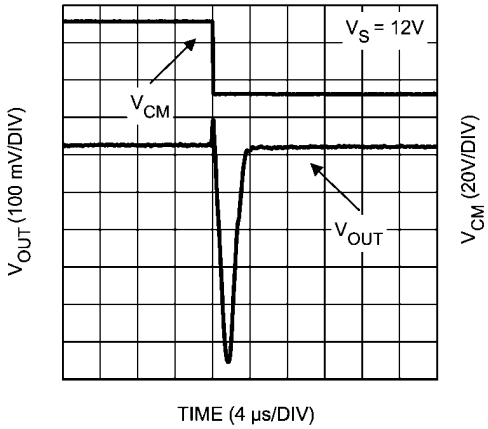

30071615

Application Information

查询"LMP8645"供应商

GENERAL

The LMP8645 and LMP8645HV are single supply high side current sense amplifiers with variable gain selected through an external resistor and a common mode voltage range of -2V to 42V or -2V to 76V depending on the grade.

The sense voltage is amplified by a user-selected gain and level shifted from the positive power supply to a ground-referred output.

THEORY OF OPERATION

As seen from the picture below, the current flowing through R_S develops a voltage drop equal to V_{SENSE} across R_S. The high impedance inputs of the amplifier doesn't conduct this current and the high open loop gain of the sense amplifier forces its non-inverting input to the same voltage as the inverting input. In this way the voltage drop across R_{IN} matches V_{SENSE}. A current proportional to I_S according to the following relation:

$$I_S' = V_{SENSE}/R_{IN} = R_S{*}I_S/R_{IN}\text{ , where } R_{IN} = 1/Gm$$

flows entirely in the external gain resistor developing a voltage drop equal to

$$V_G = I_S'{*}R_{GAIN} = (V_{SENSE}/R_{IN}){*}R_{GAIN} = ((R_S{*}I_S)/R_{IN}){*}R_{GAIN}$$

This voltage is buffered and showed at the output with a very low impedance allowing a very easy interface of the LMP8645 with other ICs (ADC, µC…).

$$V_{OUT} = (R_S{*}I_S){*}G\text{, where } G = R_{GAIN}/R_{IN}$$

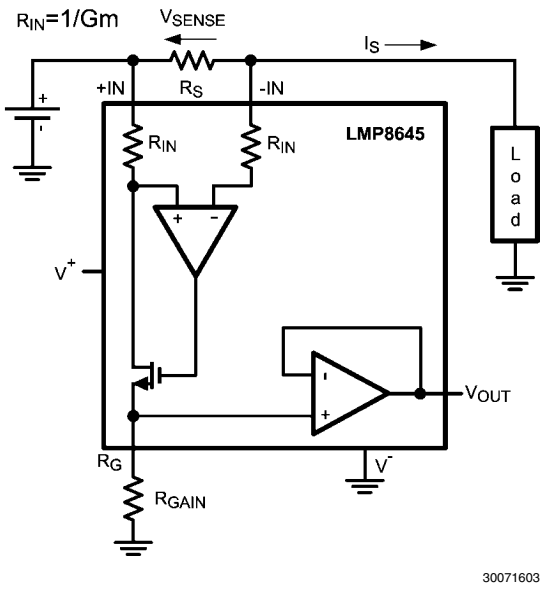

FIGURE 1. Current monitor

SELECTION OF THE SHUNT RESISTOR

The accuracy of the current measurement strictly depends on the value of the shunt resistor R_S. Its value depends on the application and it is a compromise between small-signal accuracy and maximum permissible voltage loss in the measurement section. High values of R_S provide better accuracy at lower currents by minimizing the effects of offset, while low values of R_S minimize voltage loss in the supply section. For most applications, best performance is obtained with an R_S value that provides a full-scale shunt voltage range of 100 mV to 200 mV.

SELECTION OF THE GAIN RESISTOR

In the LMP8645 and LMP8645HV the gain is selected through an external resistor connected to the R_G pin. Moreover the gain resistor R_{GAIN} determines the voltage of the output buffer which is related to the supply voltage and to the common mode voltage of the input signal. The gain resistor must be chosen such that the max output voltage does not exceed the LMP8645 max output voltage rating for a given common mode voltage.

The following equations explain how to select the gain resistor for various range of the input common mode voltage.

$$\text{Case 1} \quad -2V < V_{CM} \leq 1.8V$$

The max voltage at the RG pin is given by the following inequality $V_{RG}=V_{sense}{*}R_{GAIN}{*}Gm \leq \min(1.3V;\ Vout\_max)$ where Vout_max is the maximum allowable output voltage according to the Electrical Tables.All the gain resistors (R_{GAIN}) which respect the previous inequality are allowed. The graphical representation in *Figure 2* helps in the selection; all the combinations (V_{SENSE}, R_{GAIN}) below the curve are allowed.

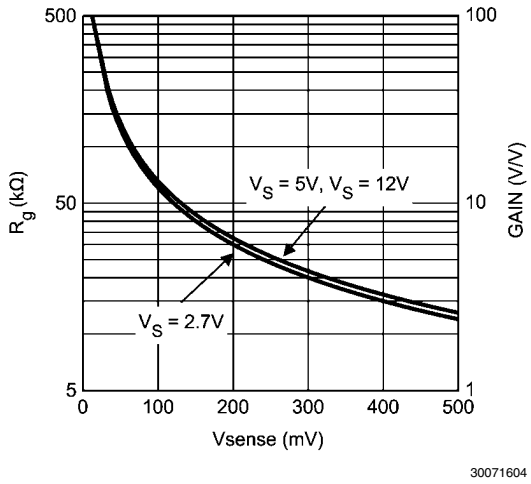

FIGURE 2. Allowed Gains for CASE 1

As a consequence once selected the gain (R_{GAIN}) the V_{SENSE} range is fixed too. For example if an application required a Gain of 10, R_G will be 50 kΩ and V_{SENSE} will be in the range 10 mV to 100 mV.

$$\text{Case 2} \quad 1.8V < V_{CM} \leq V_S$$

In this case the max voltage at the R_G pin is related to the common mode voltage and V_{SENSE}. So all the R_{GAIN} resistors which respect the following inequalities are allowed:

$$V_{R_G} \leq \min\ (Vout\_max;\ (V_{CM} - V_{sense}\text{-}250mV))$$

where

$V_{RG} = V_{SENSE}{*}R_{GAIN}{*}Gm$ and Vout_max is the maximum allowable output voltage according to the Electrical Tables.

The graphical representation in *Figure 3* helps in the selection; all the combinations (V_{SENSE}, R_{GAIN}) below the curves for given V_{CM} and supply voltage are allowed.

查询"LMP8645"供应商

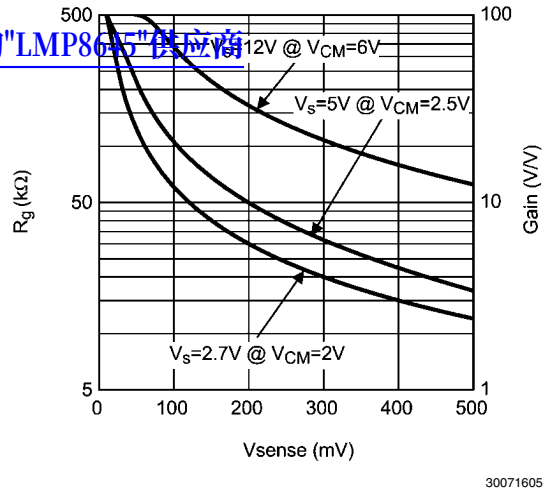

FIGURE 3. Allowed Gains for CASE 2

Also in this case once selected the R_{GAIN} (Gain) the V_{SENSE} range is fixed too.

Case 3 $V_{CM} \geq V_S$

The max voltage at the R_G pin is Vout_max, it means that $V_{OUT} = V_{SENSE} * R_{GAIN}/R_{IN} \leq$ Vout_max where Vout_max is the maximum allowable output voltage according to the Electrical Tables.So all the R_{GAIN} resistors which respect the previous inequality are allowed. The graphical representation in helps in the selection; all the combinations (V_{SENSE}, R_{GAIN}) below the curves are allowed.

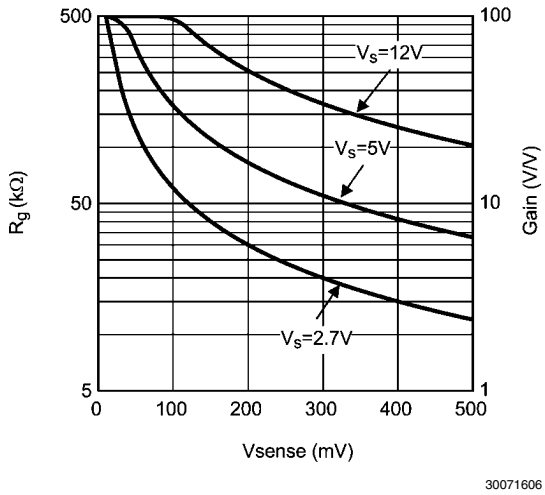

FIGURE 4. Allowed Gains for CASE 3

Also in this case once selected the R_{GAIN} (Gain) the V_{SENSE} range is fixed too.

From the cases showed above a good way to maximize the output voltage swing of the LMP8645 is to select the max allowable Rgain according to the previous equations. For a fixed supply voltage and Vsense as the common mode voltage increases, the max allowable Rgain increases too.

DRIVING ADC

The input stage of an Analog to Digital converter can be modeled with a resistor and a capacitance versus ground. So if the voltage source doesn't have a low impedance an error in the amplitude's measurement will occur. In this case a buffer is needed to drive the ADC. The LMP8645 has an internal output buffer able to drive a capacitance load up to 30 pF or the input stage of an ADC. If required an external low pass RC filter can be added at the output of the LMP8645 to reduce the noise and the bandwidth of the current sense. Any other filter solution which implies a capacitance connected to the R_G pin is not suggested due to the high impedance of that pin.

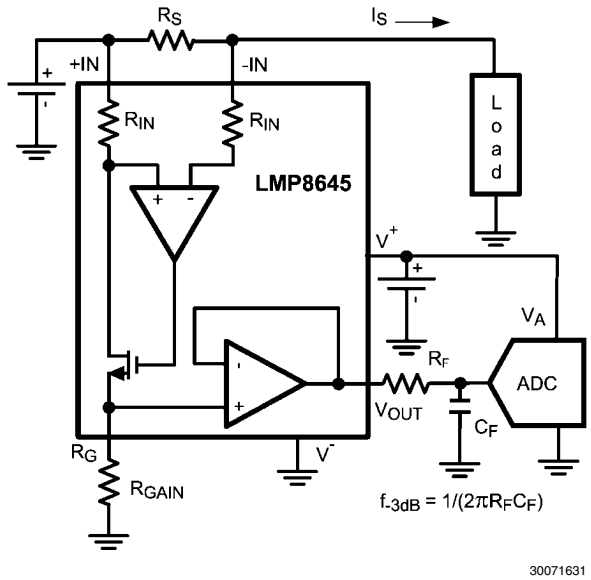

FIGURE 5. LMP8645 to ADC interface

SENSING CURRENT IN LED DRIVER APPLICATIONS

The LMP8645 is the right choice in the applications which requires high side current sense, such as High Brightness LED for automotive where the LED's cathode has to be connected to the case (ground) of the car. In this case the classical low side current sense with a shunt resistor connected between the LED's cathode and the case doesn't guarantee the ground connection. In *Figure 6*, the LMP8645 monitors the current for the LM3406 a constant current buck regulator. The LMP8645 is supplied by the internal LDO of the LM3406 thorough the pin VCC, the current which flows in the LED is programmed according the following formula: $I_F = V_{CS}/(R_S*\text{Gain})$, where Gain = R_{GAIN}*Gm and V_{CS}=200 mV. In this application the current which flows in the HB LED is in the range between 350 mA and 1A, so in order to reduce the power dissipation on the shunt resistor and have a good accuracy, the R_S should be in the range between 50 mΩ and 200 mΩ. In the table below two examples are analyzed.

	I_F=350mA	I_F=1A
R_{GAIN}	40kΩ	36kΩ
R_S	77mΩ	27mΩ
Dissipated Power	9.5mW	27mW
Total Accuracy	≅5%	≅5%

查询"LMP8645"供应商

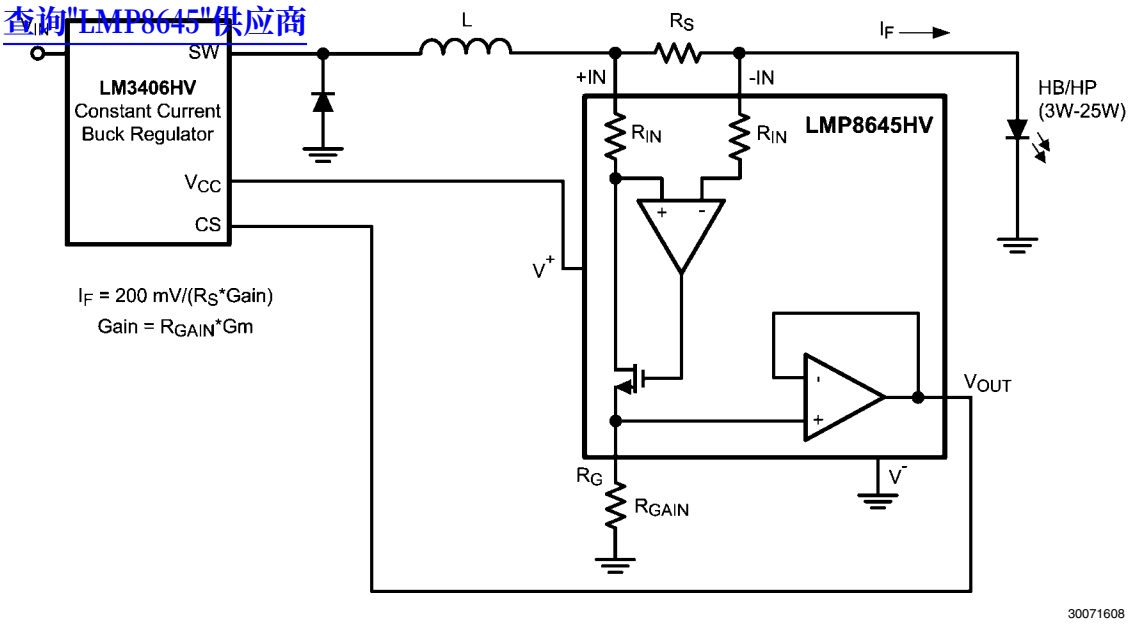

FIGURE 6. High Side Current Sensing in Driving HP/HB LED

Physical Dimensions inches (millimeters) unless otherwise noted

查询"LMP8645"供应商

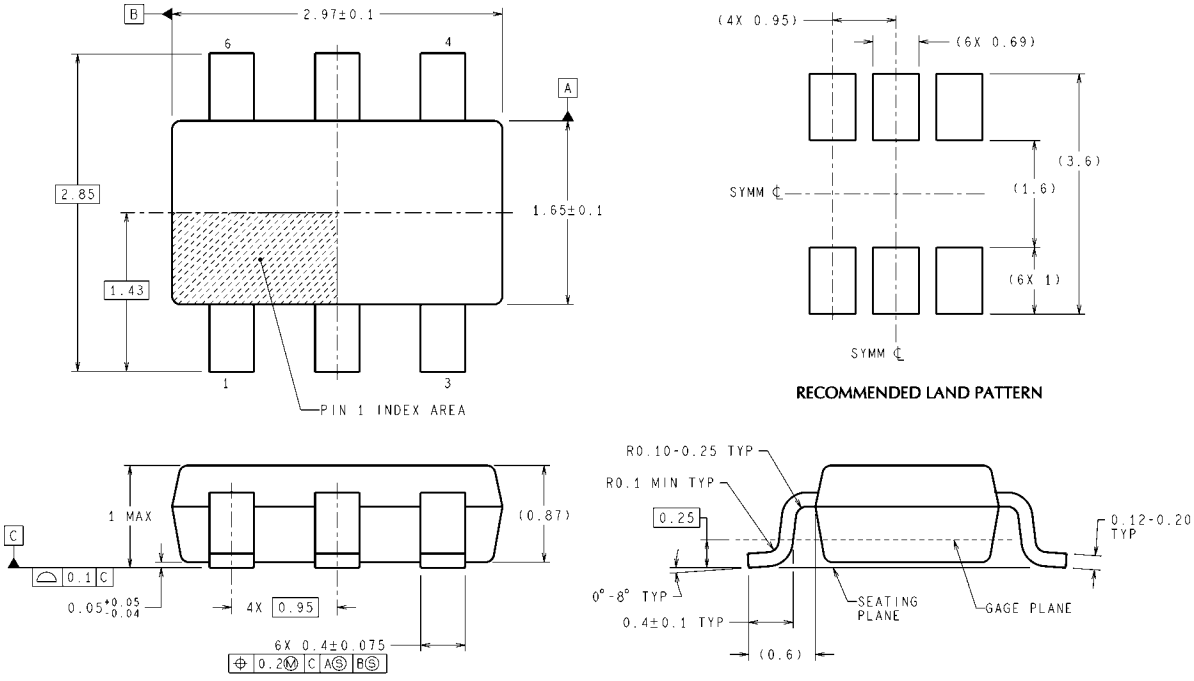

DIMENSIONS ARE IN MILLIMETERS

MK06A (Rev E)

TSOT-6
NS Package Number MK06A

查询"LMP8645"供应商

Notes

查询"LMP8645"供应商

Notes

For more National Semiconductor product information and proven design tools, visit the following Web sites at: www.national.com

Products		Design Support	
Amplifiers	www.national.com/amplifiers	WEBENCH® Tools	www.national.com/webench
Audio	www.national.com/audio	App Notes	www.national.com/appnotes
Clock and Timing	www.national.com/timing	Reference Designs	www.national.com/refdesigns
Data Converters	www.national.com/adc	Samples	www.national.com/samples
Interface	www.national.com/interface	Eval Boards	www.national.com/evalboards
LVDS	www.national.com/lvds	Packaging	www.national.com/packaging
Power Management	www.national.com/power	Green Compliance	www.national.com/quality/green
Switching Regulators	www.national.com/switchers	Distributors	www.national.com/contacts
LDOs	www.national.com/ldo	Quality and Reliability	www.national.com/quality
LED Lighting	www.national.com/led	Feedback/Support	www.national.com/feedback
Voltage References	www.national.com/vref	Design Made Easy	www.national.com/easy
PowerWise® Solutions	www.national.com/powerwise	Applications & Markets	www.national.com/solutions
Serial Digital Interface (SDI)	www.national.com/sdi	Mil/Aero	www.national.com/milaero
Temperature Sensors	www.national.com/tempsensors	SolarMagic™	www.national.com/solarmagic
PLL/VCO	www.national.com/wireless	PowerWise® Design University	www.national.com/training

THE CONTENTS OF THIS DOCUMENT ARE PROVIDED IN CONNECTION WITH NATIONAL SEMICONDUCTOR CORPORATION ("NATIONAL") PRODUCTS. NATIONAL MAKES NO REPRESENTATIONS OR WARRANTIES WITH RESPECT TO THE ACCURACY OR COMPLETENESS OF THE CONTENTS OF THIS PUBLICATION AND RESERVES THE RIGHT TO MAKE CHANGES TO SPECIFICATIONS AND PRODUCT DESCRIPTIONS AT ANY TIME WITHOUT NOTICE. NO LICENSE, WHETHER EXPRESS, IMPLIED, ARISING BY ESTOPPEL OR OTHERWISE, TO ANY INTELLECTUAL PROPERTY RIGHTS IS GRANTED BY THIS DOCUMENT.

TESTING AND OTHER QUALITY CONTROLS ARE USED TO THE EXTENT NATIONAL DEEMS NECESSARY TO SUPPORT NATIONAL'S PRODUCT WARRANTY. EXCEPT WHERE MANDATED BY GOVERNMENT REQUIREMENTS, TESTING OF ALL PARAMETERS OF EACH PRODUCT IS NOT NECESSARILY PERFORMED. NATIONAL ASSUMES NO LIABILITY FOR APPLICATIONS ASSISTANCE OR BUYER PRODUCT DESIGN. BUYERS ARE RESPONSIBLE FOR THEIR PRODUCTS AND APPLICATIONS USING NATIONAL COMPONENTS. PRIOR TO USING OR DISTRIBUTING ANY PRODUCTS THAT INCLUDE NATIONAL COMPONENTS, BUYERS SHOULD PROVIDE ADEQUATE DESIGN, TESTING AND OPERATING SAFEGUARDS.

EXCEPT AS PROVIDED IN NATIONAL'S TERMS AND CONDITIONS OF SALE FOR SUCH PRODUCTS, NATIONAL ASSUMES NO LIABILITY WHATSOEVER, AND NATIONAL DISCLAIMS ANY EXPRESS OR IMPLIED WARRANTY RELATING TO THE SALE AND/OR USE OF NATIONAL PRODUCTS INCLUDING LIABILITY OR WARRANTIES RELATING TO FITNESS FOR A PARTICULAR PURPOSE, MERCHANTABILITY, OR INFRINGEMENT OF ANY PATENT, COPYRIGHT OR OTHER INTELLECTUAL PROPERTY RIGHT.

LIFE SUPPORT POLICY

NATIONAL'S PRODUCTS ARE NOT AUTHORIZED FOR USE AS CRITICAL COMPONENTS IN LIFE SUPPORT DEVICES OR SYSTEMS WITHOUT THE EXPRESS PRIOR WRITTEN APPROVAL OF THE CHIEF EXECUTIVE OFFICER AND GENERAL COUNSEL OF NATIONAL SEMICONDUCTOR CORPORATION. As used herein:

Life support devices or systems are devices which (a) are intended for surgical implant into the body, or (b) support or sustain life and whose failure to perform when properly used in accordance with instructions for use provided in the labeling can be reasonably expected to result in a significant injury to the user. A critical component is any component in a life support device or system whose failure to perform can be reasonably expected to cause the failure of the life support device or system or to affect its safety or effectiveness.

National Semiconductor and the National Semiconductor logo are registered trademarks of National Semiconductor Corporation. All other brand or product names may be trademarks or registered trademarks of their respective holders.

Copyright© 2010 National Semiconductor Corporation

For the most current product information visit us at www.national.com

National Semiconductor Americas Technical Support Center
Email: support@nsc.com
Tel: 1-800-272-9959

National Semiconductor Europe Technical Support Center
Email: europe.support@nsc.com

National Semiconductor Asia Pacific Technical Support Center
Email: ap.support@nsc.com

National Semiconductor Japan Technical Support Center
Email: jpn.feedback@nsc.com