20 Watt NT Dual Series DC/DC Converters

查询"48D12.850NT"供应商

Features

- Fully Self Contained, No External Parts Required for Operation
- Low and Specified Input/Output Capacitance
- Efficiencies to 85%
- Overcurrent Protected and Thermal Shutdown Circuitry for Long, Reliable Operation
- Five Sided Shielded Low Thermal Gradient Copper Case
- Five Year Warranty
- Water Washable Case Design

Description

Designed to save valuable PC board space, the 20 Watt NT Dual series is ideal for use in battery operated industrial, medical control and remote data collection systems. Each unit is completely filtered to reduce noise, has an exceptionally low input/output capacitance and provides efficiencies to 85%.

Complete overload protection with independent pulse-by-pulse current limiting and an overtemperature shutdown circuit ensure zero-failure rate operation. Their copper cases are five-sided, shielded and water washable.

Selection Chart

Model	Input Range VDC		Output VDC	Output mA
	Min	Max		
12D5.1700NT	9	18	±5	1700
12D12.850NT	9	18	±12	850
12D15.700NT	9	18	±15	700
24D5.1700NT	18	36	±5	1700
24D12.850NT	18	36	±12	850
24D15.700NT	18	36	±15	700
48D5.1700NT	36	72 *	±5	1700
48D12.850NT	36	72 *	±12	850
48D15.700NT	36	72 *	±15	700

** UL Recognition only applies up to 60 VDC*

20 Watt NT Dual Series Block Diagram

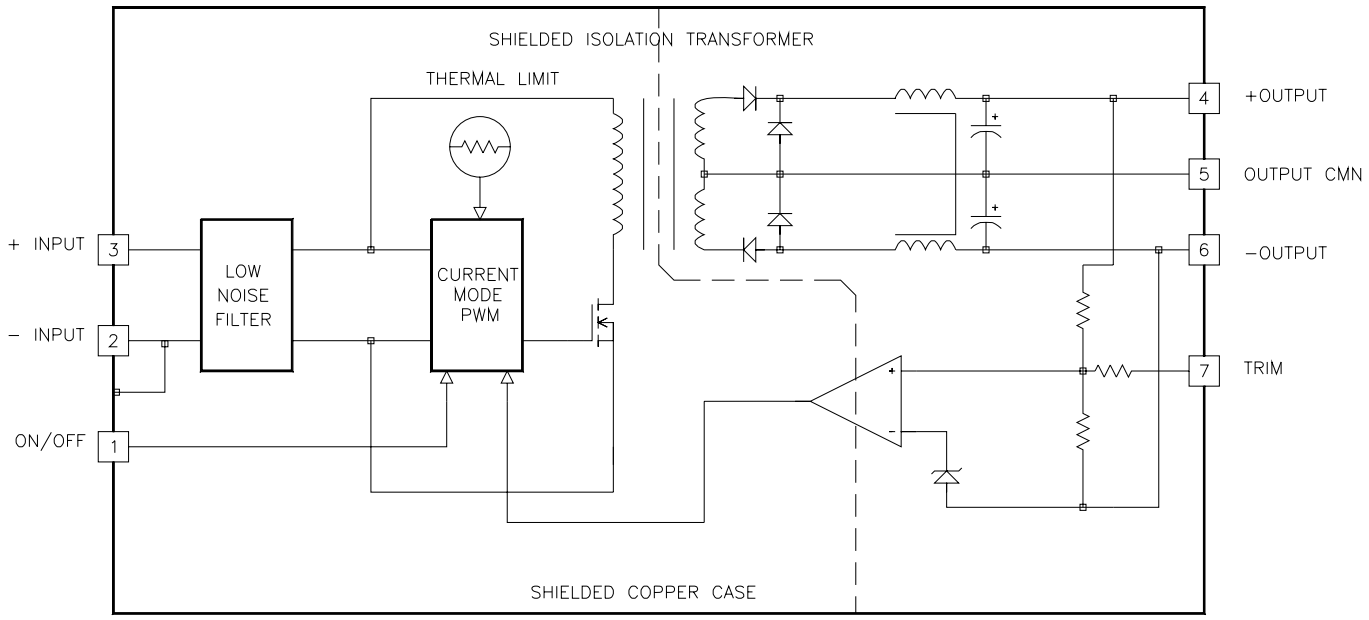

查询"48D12.850NT"供应商

Input Parameters*								
Model		**12D5.1700NT**	**12D12.850NT**	**12D15.700NT**	**24D5.1700NT**	**24D12.850NT**	**24D15.700NT**	**Units**
Voltage Range	MIN MAX	9.0 18.0			18.0 36.0			VDC
Reflected Ripple (1)	TYP	350			140			mA P-P
	TYP	100			40			mA RMS
Input Current No Load Full Load	TYP TYP	40 1750	40 2170	40 2210	40 875	40 1010	40 1030	mA
Efficiency	TYP	81	78	79	81	84	85	%
Switching Frequency	TYP	220						kHz
Maximum Input Overvoltage, 100 ms maximum	MAX	24			45			VDC
Turn-on Time, 1% Output Error	TYP	6						ms
Recommended Fuse		(2)						AMPS
Model		**48D5.1700NT**		**48D12.850NT**		**48D15.700NT**		**Units**
Voltage Range	MIN MAX	36.0 72.0 *						VDC
Reflected Ripple (1)	TYP	90						mA P-P
	TYP	25						mA RMS
Input Current No Load Full Load	TYP TYP	40 440		40 505		40 520		mA
Efficiency	TYP	81		84		84		%
Switching Frequency	TYP	220						kHz
Maximum Input Overvoltage, 100 ms maximum	MAX	85						VDC
Turn-on Time, 1% Output Error	TYP	6						ms
Recommended Fuse		(2)						AMPS

** UL Recognition only applies up to 60 VDC*

Output Parameters*					
Model		**12D5.1700NT 24D5.1700NT 48D5.1700NT**	**12D12.850NT 24D12.850NT 48D12.850NT**	**12D15.700NT 24D15.700NT 48D15.700NT**	**Units**
Output Voltage		±5	±12	±15	VDC
Output Voltage Accuracy	MIN TYP MAX	4.95 5.00 5.05	11.90 12.00 12.10	14.90 15.00 15.10	VDC
Output Balance Plus to Minus Output, Full Load	TYP MAX	< 0.5 1.0			%
Rated Load Range	MIN MAX	0.0 1.7	0.0 0.85	0.0 0.7	A
Load Regulation (12)	TYP MAX	0.3 0.7	0.1 0.6	0.2 0.6	%
Cross Regulation (13)	TYP	2.5	1.0	1.0	%
Line Regulation Vin = Min-Max VDC	TYP MAX	< 0.1 0.8	< 0.2 0.8	< 0.2 0.8	%
Short Term Stability (5)	TYP	< 0.05			%/24Hrs
Long Term Stability	TYP	< 0.2			%/kHrs
Transient Response (6)	TYP	100	100	Output never exceeds 1%	µs
Dynamic Response (7)	TYP	70	120	100	mV peak
Input Ripple Rejection (8)	TYP	> 40			dB
Noise, 0-20MHz bw (1)	TYP	50	50	50	mV P-P
RMS Noise, 0.01-1 MHz bw	TYP	15	10	10	mV RMS
Temperature Coefficient	TYP MAX	50 150			ppm/°C
Short Circuit Protection to Common for all Outputs		Continuous, Current Limit and Thermal Protection			

查询"48D12.850NT"供应商

General Specifications*			
All Models			Units
ON/OFF Function			
ON Logic Level or Leave Pin Open	MIN	> 1.6	VDC
OFF Logic Level or Tie Pin to -Input	MAX	< 0.7	VDC
Open Circuit Voltage	TYP	2.5	VDC
Input Resistance	TYP	20	kohms
Converter Idle Current ON/OFF Pin Low 12S Models 24S and 48S Models	 TYP TYP	 13 14	 mA mA
Isolation (3)			
Breakdown Voltage Input to Output 12D, 24D Input to Output 48D 10 µA Leakage	 MIN MIN	 700 1544	VDC
Input to Output Capacitance	TYP	500	pF
Output Trim Function			
Trim Range	MIN	±5	%
Input Resistance	MIN	60	kohms
Environmental			
Case Operating Range No Derating	MIN MAX	-40 90	°C
Case Functional Range (10)	MIN MAX	-50 100	°C
Storage Range	MIN MAX	-55 105	°C
Thermal Shutdown Case Temperature	TYP	105	°C
Thermal Impedance (11)	TYP	9.5	°C/Watt
General			
Unit Weight	TYP	2.3	oz
Chassis Mounting Kit		MS8	
Agency Approvals		UL1950, see note	

Note: On nominal 48Vin models UL recognition only applies up to 60 VDC

NOTES

*** All parameters measured at Tc=25°C, nominal input voltage and full rated load unless otherwise noted. Refer to the CALEX Application Notes for the definition of terms, measurement circuits and other information.**

(1) Noise is measured per CALEX Application Notes. Measurement bandwidth is 0-20 MHz for peak-peak measurements, 10 kHz to 1 MHz for RMS measurements. Output noise is measured with a 0.01µF ceramic in parallel with a 1µF tantalum located 1" away from the converter to simulate your boards standard decoupling. Input reflected ripple is measured into a 1 µH source impedance.

(2) To determine the correct fuse size, see CALEX Application Notes.

(3) The Case is tied to the -Input pin.

(5) Short term stability is specified after a 30 minute warmup at full load, constant line and recording the drift over a 24 hour period.

(6) The transient response is specified as the time required to settle from a 50 to 75 % step load change on one output (rise time of step = 2 µSec) to a 1% error band.

(7) Dynamic response is the peak overshoot during a transient as defined in note 6 above.

(8) The input ripple rejection is specified for DC to 120 Hz ripple with a modulation amplitude of 1% of Vin.

(10) The functional temperature range is intended to give an additional data point for use in evaluating this power supply. At the low functional temperature the power supply will function with no side effects, however sustained operation at the high functional temperature will reduce expected operational life. The data sheet specifications are not guaranteed over the functional temperature range.

(11) The case thermal impedance is specified as the case temperature rise over ambient per package watt dissipated.

(12) Load regulation is defined as the voltage change on either output as the loads on both outputs are changed from 25% to 100% full load at the same time.

(13) Cross regulation is defined as the change in one output when the other output is changed from 25% to 100% full load.

(14) Specifications subject to change without notice.

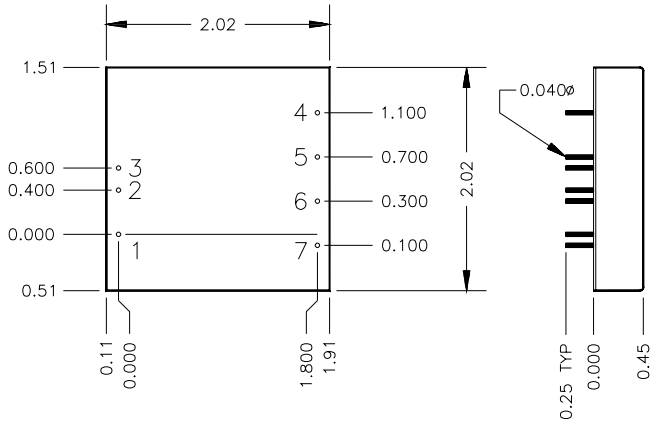

BOTTOM VIEW SIDE VIEW

Mechanical tolerances unless otherwise noted:

X.XX dimensions: ±0.020 inches

X.XXX dimensions: ±0.005 inches

Pin	Function
1	ON/OFF
2	-INPUT
3	+INPUT
4	+OUTPUT
5	CMN
6	-OUTPUT
7	TRIM

Applications Information

The 20 Watt NT Dual series like all CALEX converters carries the full 5 year CALEX no hassle warranty. We can offer a five year warranty where others can't because with CALEX it's rarely needed.

General Information

The 20 Watt NT Dual series is mindful of battery operation for industrial, medical control and remote data collection applications. The remote ON/OFF pin places the converter in a very low power mode that draws typically less than 3 mA from the input source.

Full overload protection is provided by independent pulse-by-pulse current limiting and an over-temperature shutdown circuit. These protection features assure you that our 20 Watt Dual will provide you with zero failure rate operation.

A fully five sided shielding, sealed, water washable case is standard along with specified operation over the full commercial temperature range of -40 to +90°C.

查询"48D12.850NT"供应商

General Operation

Applying The Input

Figure 1 shows the recommended connections for the 20 Watt NT Dual DC/DC converter. A fuse is recommended to protect the input circuit and should not be omitted. The fuse serves the purpose of preventing unlimited current from flowing in the case of a catastrophic system failure.

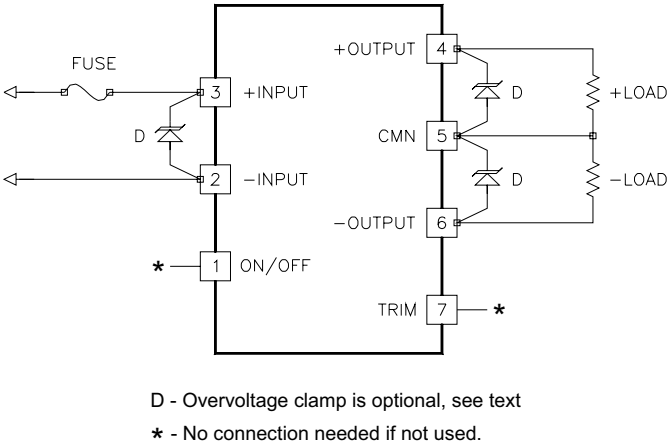

Figure 1.

Standard connections for the 20 Watt NT Dual. The ON/OFF and TRIM pins can be left floating if they are not used. The input fuse should not be omitted. The overvoltage diodes may be added to the circuit directly at the converter to provide transient protection to your circuit.

The ON/OFF and TRIM pins may be left floating if they are not used. No external capacitance on either the input or outputs is required for normal operation, in fact it can degrade the converters performance. See our application note “Understanding DC/DC Converters Output Impedance” and the low noise circuits later in this data sheet for more information. The usual 1 µF to 10 µF tantalum and 0.1 to 0.001 µF ceramic bypasses may be used around your PCB as required for local bypassing without harm.

Extremely low ESR capacitors (< 0.5 ohms) should not be used at the input as this will cause peaking of the input filters transfer function and actually degrade the filters performance.

Applying The Output

The output is simply connected to your application circuit and away you go. If extra low output noise is required in your application the circuit shown in Figure 2 may be used to reduce the output noise to below 10 mV peak-peak.

The trim pin may be used to adjust the outputs by up to +5 % from the nominal factory setting to account for system wiring voltage drops. Figure 3 shows the proper connections to use the trim pin. If output trimming is not desired the trim pin may be safely left floating.

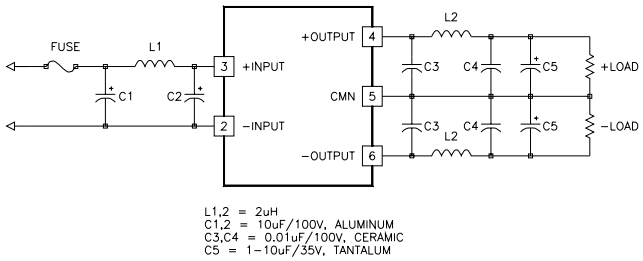

Figure 2.

For very low noise applications the circuits shown above can be used. The input current ripple will be reduced approximately 30 dB of the original value while the output noise will be reduced to below 10 mV P-P.

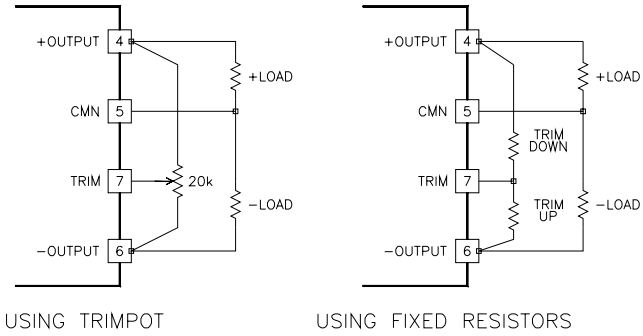

Figure 3.

The output can be trimmed by either a trimpot or fixed resistors. If fixed resistors are used their values may range from 0 to infinite ohms. The trimpot should be 20 K ohms nominal.

Non Standard Output Voltages/Single Ended Mode

The trim may be used to adjust a +5 output unit up to 5.2 volts for ECL applications or to make up for line voltage drops. +5 output units will trim around a range of approximately +4.2 to +5.3 volts.

+12 volt units will trim around a range of approximately +7.4 to +12.9 volts and +15 volt units will trim around a range of approximately +8.6 to +16 volts.

The dual outputs may also be used single-ended to get 10, 24 or 30 volts output at the full rated current of 1.7, 0.85 or 0.7 Amps (see figure 4). To use the single ended mode just connect your load to the + and - output terminals and leave the CMN output floating. Trimming of the output voltage may also be done while using the outputs in the single ended mode.

Maximum power from the module is limited to the specified non-trimmed maximum (Typical Output Voltage x Maximum Rated Load = Maximum Power). Trimming the output up reduces the output current proportionally to keep the maximum power constant. Output current is not increased over the Rated Maximum when trimming the output voltage down.

See our application note on remote sense and trim functions for more information.

查询"48D12.850NT"供应商

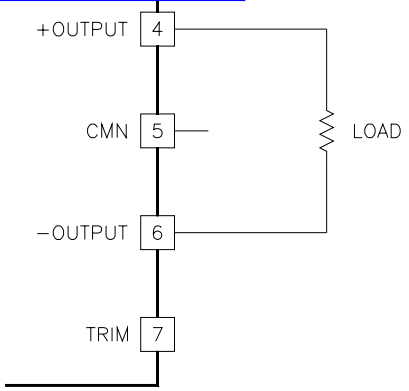

Figure 4.

To get 10, 24 or 30 volt outputs use the NT dual in the "Single Ended" mode. In this mode the load is taken across the + to - pins with the CMN pin left floating. Output Current in this mode is the full rated 1.7, 0.85 or 0.7 Amps. Output trimming may optionally be used as shown in figure 3.

Grounding

The input and output sections are fully floating from each other. They may be operated fully floating or with a common ground. If the input and output sections are connected either directly at the converter or at some remote location from the converter it is suggested that a 1 to 10µF, 0.5 to 5 ohm ESR capacitor bypass be used directly at the converter output pins. This capacitor prevents any common mode switching currents from showing up at the converters output as normal mode output noise. Do not use the lowest ESR, biggest value capacitor that you can find! This can only lead to reduced system performance or oscillation. See our application note "Understanding Output Impedance For Optimum Decoupling" for more information.

Another useful "Trick" that can be used when operating with a common ground is to use a 10 to 100 µH choke between the grounds. This gives you a solid low frequency ground connection, but looks like a high impedance to the switching current effects and prevents them from flowing in the connection. This will have the effect of preventing the common mode currents from showing up as normal mode components in your output or input circuits. Be sure that the "Q" of this inductor is quite low and that the self resonant frequency is above 220 kHz. If necessary to keep the inductor "Q" low, parallel it with a 200 ohm to 1k ohm resistor.

Case Grounding

The case serves not only as a heat sink but also as a EMI shield. The 0.016 inch thick copper provides >25 dB of absorption loss to both electromagnetic and electric fields at 220 kHz, while at the same time providing about 30% better heat sinking than competitive 0.01 inch thick steel cases.

The case shield is tied to the -Input. This connection is shown on the block diagram. The case is floating from the output, coupled only by the 500 pF of isolation capacitance.

Operation

The remote ON/OFF pin may be left floating if this function is not used. The equivalent input circuit for the ON/OFF pin is shown in figure 5. The best way to drive this pin is with an open collector/drain or relay contact. See our application note titled "Understanding the remote ON/OFF function" for more information about using the remote ON/OFF pin.

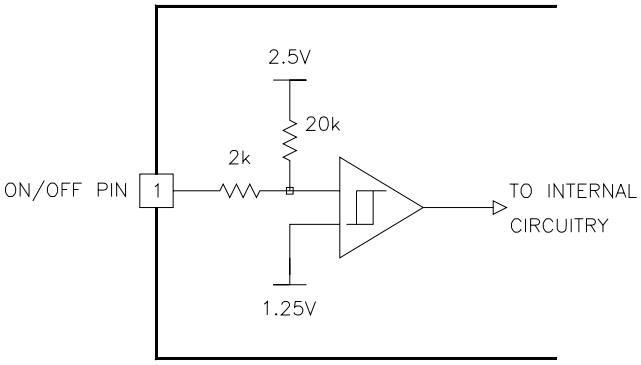

Figure 5.

The simplified schematic of the NT Dual series ON/OFF pin. The input impedance is approximately 20 kohms. The open circuit voltage is approximately 2.5 volts. By leaving this pin floating the converter will be in the ON state. When the pin is pulled below 0.7 volts the converter is placed in the power down or OFF state. See our application note on the remote ON/OFF function for more information.

When the ON/OFF pin is pulled low with respect to the -Input, the converter is placed in a low power drain state. When the ON/OFF pin is released the converter fully powers up in typically 10 milliseconds. The ON/OFF pin turns the converter off while keeping the input bulk capacitor fully charged, this prevents the large inrush current spike that occurs when the +input pin is opened and closed.

Temperature Derating

The NT Dual series can operate up to 90°C case temperature without derating. Case temperature may be roughly calculated from ambient by knowing that the NT Duals case temperature rise is approximately 9.5°C per package watt dissipated.

For example: If a 24 volt input converter was delivering 15 Watts, at 24 volts input at what ambient could it expect to run with no moving air and no extra heatsinking?

Efficiency is approximately 82%, this leads to an input power of about 18 Watts. The case temperature rise would be 3 Watts x 9.5 = 28.5°C. This number is subtracted from the maximum case temperature of 90°C to get approximately: 62°C.

This is a rough approximation to the maximum ambient temperature. Because of the difficulty of defining ambient temperature and the possibility that the loads dissipation may actually increase the local ambient temperature significantly or that convection cooling is suppressed by physical placement of the module. These calculations should be verified by actual measurement of operating temperature and your circuits exact efficiency (efficiency depends on both line input and load value) before committing to a production design.

查询"48D12.850NT"供应商

Typical Performance (Tc=25°C, Vin=Nom VDC, Rated Load).

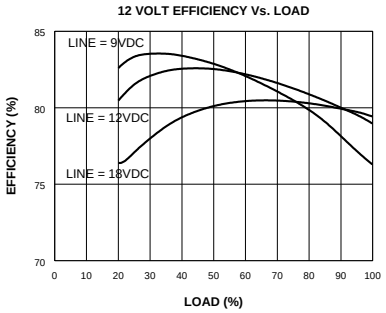

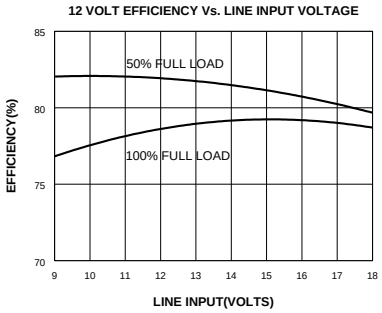

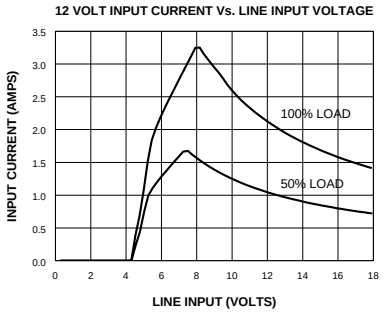

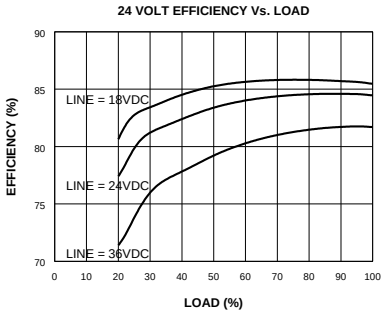

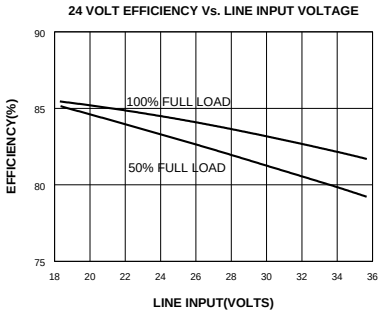

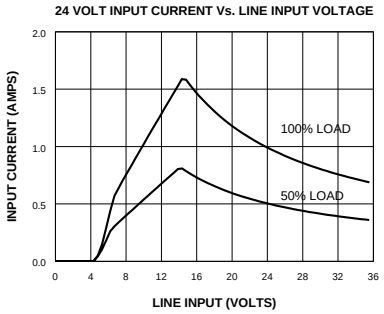

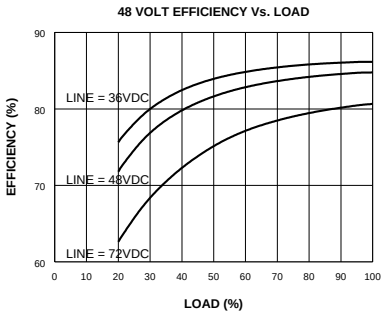

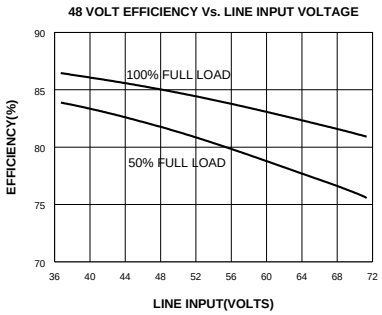

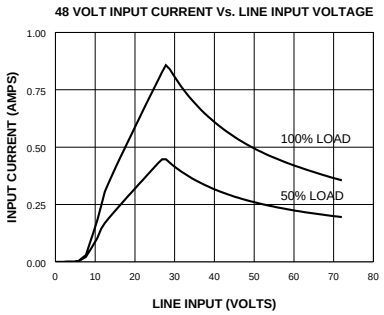

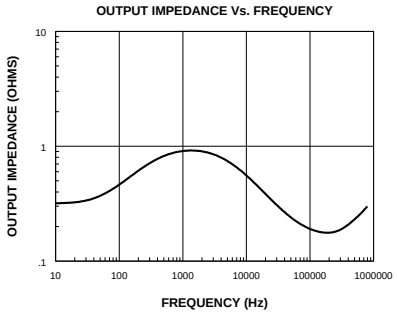

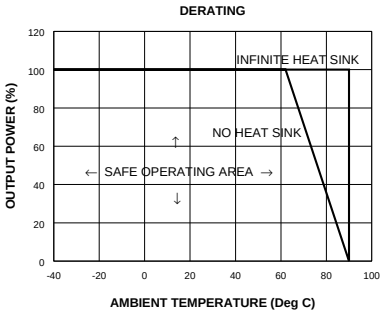

NOTES ON USING THE CURVES

1) The Input currents are for 20 Watts of output power. For ±5 Volt output models the current is approximately 15% less.

2) The efficiency curves were generated for 12 Volt output models. To use for other outputs adjust as follows:

   ±5 Volt outputs.....Subtract approximately 3%
   ±15 Volt outputs.....Add approximately 1%