查询"2N3564"供应商

RF-IF High Frequency Transistors

TYPE NO.	POLARITY	CASE	MAXIMUM RATINGS P_d (mW)	I_C (mA)	V_{CEO} (V)	H_{FE} min	H_{FE} max	I_C (mA)	V_{CE} (V)	$V_{CE(SAT)}$ max (V)	I_C (mA)	f_T min (MHz)	Cob Cre • max (pF)	N.F. max (dB)
BF 115	N	TO-72J	165	30	30	48	167	1	10	–	–	230+	0.8 •	3.5+
BF 152	N	TO-106	200	–	12	20	–	3	10	0.5	10	600	1.2	–
BF 153	N	TO-106	200	–	12	20	–	3	6	0.5	10	300	1.2	–
BF 155	N	TO-72G	200	20	40	20	–	2.5	12	0.3	10	400	0.4+•	9
BF 158	N	TO-106	200	50	12	20	–	4	10	0.5	10	700+	1.2 •	3.5
BF 159	N	TO-106	200	50	20	20	–	4	10	0.5	10	700+	1.2 •	3.5
BF 160	N	TO-106	200	50	12	20	–	3	10	0.5	10	400	1.2 •	3.5
BF 173	N	TO-72J	260	25	25	38	–	7	10	–	–	350	0.3 •	–
BF 181	N	TO-72G	150	20	20	20	–	2	10	–	–	600+	0.9+	–
BF 182	N	TO-72G	150	20	20	10	–	2	10	–	–	600+	1	7.4+
BF 183	N	TO-72G	150	20	20	10	–	3	10	–	–	800+	1+	–
BF 184	N	TO-72J	165	30	20	67	220	1	10	–	–	260+	0.9 •	4
BF 185	N	TO-72J	165	30	20	36	125	1	10	–	–	200+	0.9 •	4
BF 198	N	TO-92F	360	25	30	27	–	4	10	–	–	400+	0.22+•	3+
BF 199	N	TO-92E	360	25	25	38	–	7	10	–	–	550+	0.32+•	–
BF 200	N	TO-72G	150	20	20	15	–	2	10	–	–	500+	0.5 •	5
BF 224	N	TO-92E	360	50	30	30	–	7	10	0.15	10	300	0.3+•	4
BF 240	N	TO-92E	300	25	40	67	220	1	10	–	–	430+	0.34 •	3.5
BF 241	N	TO-92E	300	25	40	36	125	1	10	–	–	400+	0.34 •	3.5
BF 253	N	TO-92E	300	30	30	40	350#	1	10	–	–	150	0.7+•	1.5
BF 254	N	TO-92E	300	30	20	67	220	1	10	0.1+	10	260+	0.85+•	4
BF 255	N	TO-92E	300	30	20	36	125	1	10	0.1+	10	200+	0.85+•	4
BF 271	N	TO-72J	250	25	25	30	–	10	10	0.13+	10	500+	0.22+•	–
BF 310	N	TO-92F	300	25	30	29	–	4	10	–	–	300+	1.6	–
BF 311	N	TO-92E	300	25	25	40	–	15	10	–	–	750+	0.35 •	–
BF 314	N	TO-92F	300	25	30	29	–	4	10	–	–	450+	0.13 •	–
BF 368	N	TO-92A	310	50	15	35	125	1	10	0.4	10	250	1.7	–
BF 369	N	TO-92A	310	50	20	70	220	1	10	0.4	10	400	1.7	–
BF 494	N	TO-92E	300	30	20	67	220	1	10	0.1+	10	260+	0.85+•	4+
BF 495	N	TO-92E	300	30	20	36	125	1	10	0.1+	10	200+	0.85+•	4+
BF 594	N	TO-92E	250	30	25	65	220	1	10	–	–	260+	0.6+•	1.4+
BF 595	N	TO-92E	250	30	25	35	125	1	10	–	–	260+	0.6+•	1.4+
BF 597	N	TO-92E	360	25	25	38	– #	7	10	–	–	550+	0.3+•	–
BFS 62	N	TO-72G	200	25	25	35	–	7	10	–	–	580	0.33 •	4
BFW 41	N	TO-72G	200	–	15	40	80	3	1	0.4	10	600	3	4
BFW 68	N	TO-18	360	–	40	40	–	10	1	0.15	10	250	4	6
BFW 70	N	TO-72G	240	–	30	30	–	10	10	–	–	750	1.6+	2.6+
BFX 60	N	TO-72G	230	25	25	50	–	7	10	–	–	400	0.3 •	5+
BFX 73	N	TO-72G	200	50	15	20	–	3	1	0.4	10	600	1.7	6
BFY 74	N	TO-18	360	100	45	40	180	10	5	1	10	250	4	–
BFY 75	N	TO-18	360	100	45	65	300	10	5	1	10	250	4	–
BFY 78	N	TO-18	300	50	12	20	–	3	1	0.4	10	500	2.8	6
BFY 79	N	TO-72G	300	–	30	30	–	4	10	–	–	400	1 6	5.5
BFY 88	N	TO-72J	175	25	25	40	–	5	1	–	–	750	0.28 •	4
CS 9016	N	TO-92A	200	–	20	29	146#	1	5	3	10	300	1.6	4
CS 9017	N	TO-92A	200	–	18	40	198#	1	5	2	10	–	2+	4+
CS 9018	N	TO-92A	200	–	12	29	198#	1	5	0.6	10	600	1.7	–
CX 917	N	TO-92A	250	50	30	40	150	5	10	0.4	20	200	2 •	–
CX 918	N	TO-92A	250	50	20	40	150	7	10	0.4	20	400	1.5 •	–

#H_{FE} groupings available + Typical value

查询"2N3564"供应商

RF-IF High Frequency Transistors

TYPE NO.	POLARITY	CASE	MAXIMUM RATINGS Pd (mW)	IC (mA)	VCEO (V)	HFE min	HFE max	IC (mA)	VCE (V)	VCE(SAT) max (V)	IC (mA)	fT min (MHz)	Cob Cre • max (pF)	N.F. max (dB)
K 917	N	TO-92A	250	50	20	29	146#	1	5	0.5	10	150	2.5	–
K 918	N	TO-92A	250	50	12	29	146#	1	5	0.5	10	250	1.7	–
K 928	N	TO-92A	250	50	20	40	120#	1	5	0.14+	10	550	1.3	2+
MPS 3563	N	TO-92A	350	50	12	20	200	8	10	–	–	600	1.7	6
MPS 3693	N	TO-92A	350	50	45	40	160	10	10	–	–	200	3.5	4+
MPS 3694	N	TO-92A	350	50	45	100	400	10	10	–	–	200	3.5	4+
MPS 3826	N	TO-92A	350	100	45	40	160	10	10	–	–	200	3.5	–
MPS 3827	N	TO-92A	350	100	45	100	400	10	10	–	–	200	3.5	–
MPS 6507	N	TO-92A	350	100	20	25	–	2	10	–	–	700	2.5	–
MPS 6511	N	TO-92A	350	100	20	25	–	10	10	–	–	–	2.5	–
MPS 9425	N	TO-92A	350	50	18	25	160#	1	5	0.3+	10	300	1.8	–
MPS 9623	N	TO-92A	310	100	18	25	300#	1	5	0.5	10	100	3.5	–
MPS 9624	N	TO-92A	310	100	30	25	300#	1	5	0.5	10	100	3.5	–
MPS 9625	N	TO-92A	310	50	12	25	300#	1	5	0.3+	10	250	1.8	–
PN 3563	N	TO-92A	250	50	12	20	200	8	10	–	–	600	1.7	4+
PN 5130	N	TO-92A	250	50	12	15	250	8	10	0.6	10	450	1.7	4+
PN 5132	N	TO-92A	250	50	20	30	400	10	10	0.2	10	200	3.5	–
2N 915	N	TO-18	360	–	50	50	200	10	5	1	10	250	3.5	–
2N 916	N	TO-18	360	–	25	50	200	10	1	0.5	10	300	6	–
2N 917	N	TO-72G	200	50	15	20	200	3	1	0.5	3	500	1.7	6
2N 918	N	TO-72G	200	50	15	20	–	3	1	0.4	10	600	1.7	6
2N 2615	N	TO-18	300	–	15	20	–	3	1	--	–	500	2.8	–
2N 2616	N	TO-18	300	50	15	20	–	3	1	0.4	10	600	2.8	6
2N 2865	N	TO-72G	200	50	13	20	200	4	10	0.4	10	600	2.5	4.5
2N 3478	N	TO-72G	200	–	15	25	150	2	8	–	–	750	1	4.5
2N 3563	N	TO-106	200	50	12	20	200	8	10	–	–	600	1.7	4
2N 3564	N	TO-106	200	100	15	20	500	15	10	0.3	20	400	3.5	4
2N 3600	N	TO-72G	200	–	15	20	150	3	1	0.4	10	850	–	4.5
2N 3662	N	TO-92B	200	25	12	20	–	8	10	0.6	10	700	1.5	4
2N 3663	N	TO-92B	200	25	12	20	–	8	10	0.6	10	700	1.5	4
2N 3693	N	TO-106	200	30	45	40	160	10	10	0.4	10	200	3.5	4
2N 3694	N	TO-106	200	30	45	100	400	10	10	0.25	10	200	3.5	4
2N 3825	N	TO-92B	250	100	15	20	–	2	10	0.25	2	200	3.5	4
2N 3826	N	TO-92B	360	30	45	40	160	10	10	–	–	200	3.5	4
2N 3827	N	TO-92B	360	30	45	100	400	10	10	–	–	200	3.5	4
2N 3854	N	TO-92B	200	100	18	35	70	2	4.5	0.2	10	100	3.5	–
2N 3854A	N	TO-92B	200	100	30	35	70	2	4.5	0.2	10	100	3.5	–
2N 3855	N	TO-92B	200	100	18	60	120	2	4.5	0.2	10	130	3.5	–
2N 3855A	N	TO-92B	200	100	30	60	120	2	4.5	0.2	10	130	3.5	–
2N 3856	N	TO-92B	200	100	18	100	200	2	4.5	0.2	10	140	3.5	–
2N 3856A	N	TO-92B	200	100	30	100	200	2	4.5	0.2	10	140	3.5	–
2N 3932	N	TO-72G	200	–	20	40	150	2	8	–	–	750	0.55 •	4.5
2N 3933	N	TO-72G	200	–	30	60	200	2	8	–	–	750	0.55 •	4
2N 4259	N	TO-72G	175	–	30	60	250	2	8	–	–	750	0.55 •	5
2N 4292	N	TO-92B	200	50	15	20	–	3	1	0.6	10	600	3.5	6
2N 4293	N	TO-92B	200	50	15	20	–	3	1	0.6	10	600	3.5	6
2N 4934	N	TO-72J	200	–	30	40	170	2	8	–	–	700	–	3.5
2N 4935	N	TO-72J	200	–	40	60	200	2	8	–	–	700	–	3.6
2N 4936	N	TO-72J	200	–	40	60	250	2	8	–	–	700	--	4.5
2N 4994	N	TO-92F	360	30	45	40	160	10	10	–	–	200	3.5	–
2N 4995	N	TO-92F	360	30	45	100	400	10	10	–	–	200	3.5	–
2N 5127	N	TO-106	200	100	12	15	300	2	10	0.3	10	150	3.5	–

+ Typical value #H_{FE} groupings available

查询"2N3564"供应商

RF-IF High Frequency Transistors

TYPE NO.	POLARITY	CASE	MAXIMUM RATINGS			H_{FE}				$V_{CE(SAT)}$		f_T	Cob Cre •	N.F.
			P_d (mW)	I_C (mA)	V_{CEO} (V)	min	max	I_C (mA)	V_{CE} (V)	max (V)	I_C (mA)	min (MHz)	max (pF)	max (dB)
2N 5130	N	TO-106	200	50	12	15	250	8	10	0.6	10	450	2	4
2N 5131	N	TO-106	200	200	15	30	500	10	10	1	10	100	6	–
2N 5132	N	TO-106	200	50	20	30	400	10	10	0.2	10	200	3.5	–
2N 5179	N	TO-72G	200	50	12	25	250	3	1	0.4	10	600+	1	4.5
2N 5180	N	TO-72G	180	–	15	20	200	2	8	0.3	10	650	1	0
2N 5181	N	TO-72G	180	50	45▲	27	–	1	6	–	–	400	–	–
2N 5182	N	TO-72G	180	–	35▲	27	–	1	6	–	–	400	–	–
2N 5770	N	TO-92A	625	50	15	20	–	3	1	0.4	10	600+	1.7	6
2SC 477	N	TO-72G	140	30	32	40	170	1	10	–	–	150	–	–
2SC 568	N	TO-72G	200	20	15	40	150	2	6	–	–	700	1	3
2SC 817	N	TO-72G	120	20	15	35	300#	1	1	–	–	550	0.7 •	–
2SC 829	N	TO-92B	250	30	20	40	250#	1	10	0.1	10	150	1.6 •	–
2SC 838	N	TO-92B	250	50	25	30	180#	0.5	3	0.3	10	150	2.5	–
2SC 839	N	TO-92B	250	50	25	30	180#	0.5	3	0.3	10	150	2.5	4
2SC 922	N	TO-92B	250	20	20	40	180	1	6	–	–	400	1.2 •	5
2SC 929	N	TO-92B	120	30	10	40	320#	1	6	–	–	170	1.6 •	–
2SC 930	N	TO-92B	120	30	10	25	320#	1	6	–	–	170	1.6 •	–
2SC 947	N	TO-72G	150	15	20	35+	–	1	10	0.6+	10	400	–	–
2SC 948	N	TO-72G	150	15	20	35+	–	1	10	0.6+	10	700	–	–
2SC 1047	N	TO-92B	150	15	20	40	160	1	6	–	–	450	1 •	5
2SC 1293	N	TO-92B	300	50	25	15	120	1	6	–	–	200	1.8 •	–
2SC 1359	N	TO-92B	250	30	20	50	220	1	10	0.1+	10	150	1.5 •	4
2SC 1687	N	TO-92E	400	30	25	38	–	7	10	0.8	10	360	0.5 •	–
2SC 1688	N	TO-92E	400	30	40	38	–	7	10	0.8	10	360	0.5 •	–
2SC 1778	N	TO-92E	150	15	20	20	–	3	10	–	–	600	0.6 •	–
2SC 1789	N	TO-92B	200	50	18	20	–	2	10	–	–	600	1.5 •	–
2SC 1923	N	TO-92B	100	20	30	25	140#	1	6	–	–	500+	0.7+ •	4

▲BV_{CBO} + Typical value #H_{FE} groupings available

查询"2N5064"供应商

Packaging Information

PACKAGING INFORMATION

1. CATHODE
2. GATE
3. ANODE

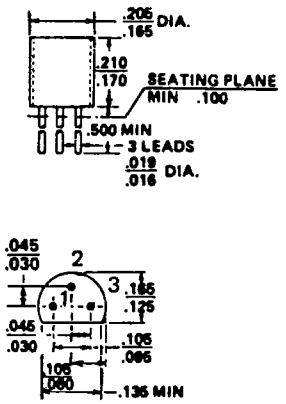

TO-18 (PLASTIC)

SCR	TRIAC
1. CATHODE	1. MT 1
2. GATE	2. GATE
3. ANODE	3. MT 2

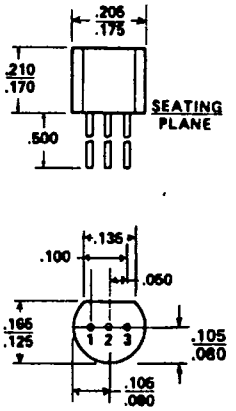

TO-92

1. CATHODE
2. GATE
3. ANODE

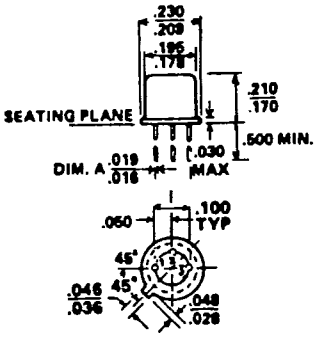

TO-18

SCR	TRIAC
1. CATHODE	1. MT 1
2. GATE	2. GATE
3. ANODE	3. MT 2

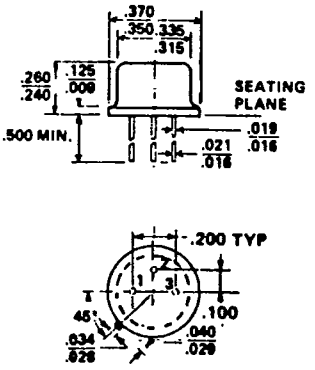

TO-39

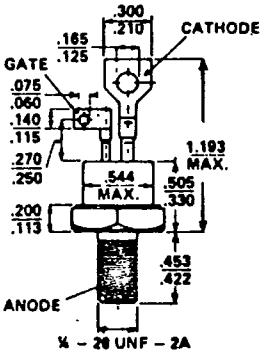

TO-48D