multimec® 3F + 1D/1E/1F

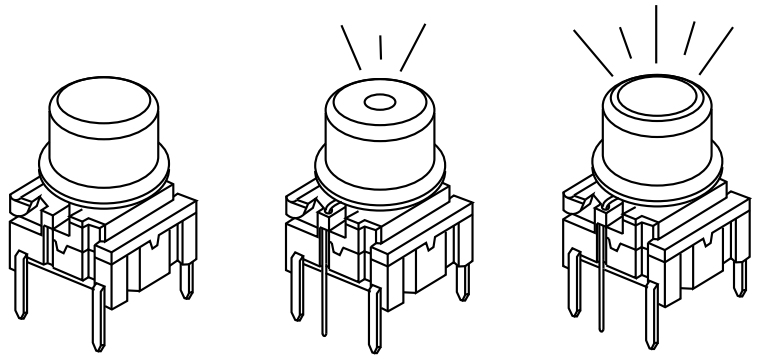

Technical Data:

- through-hole or SMD
- 50mA/24VDC
- single pole/momentary
- 10.000.000 operations life time
- IP67 sealing
- temperature range:
  low temp: -40/+65°C
  high temp: -40/+160°C

Dimensions (through-hole)

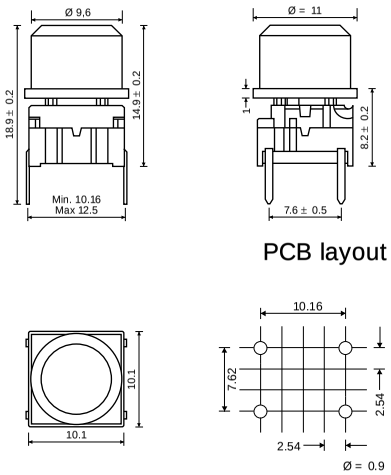

Dimensions (w/LED)

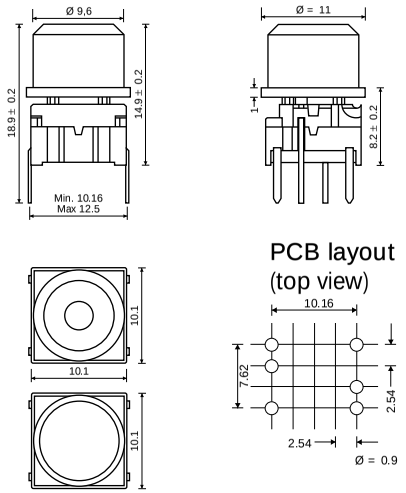

Dimensions (SMD)

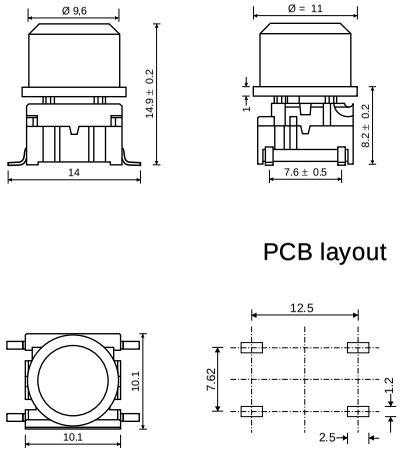

HOW TO ORDER

3 F — **Switch**

Mounting
T through-hole
S surface mount

L 6 low temp.
H 9 high temp.

+

1 D — **Cap**

00 blue
02 green
03 grey
04 yellow
06 white
08 red
09 black

Standard versions:
3FTL6
3FTH9
3FSH9

---

3 F — **Switch**

T — **Mounting**
T through-hole

L 6 low temp.
H 9 high temp.

LED
20 green
40 yellow
80 red

+

Cap 1E

Cap 1F

00 blue
02 green
03 grey
04 yellow
06 white
08 red
09 black

Lens
1 transparent
2 green
4 yellow
8 red

Standard versions:
3FTL620
3FTL640
3FTL680

查询"1D008"供应商

Ordering example: 3 FTL620 + 1E032

MEC · Industriparken 23 · P.O. BOX 26 · DK-2750 Ballerup · Denmark
Tel.: +45 44 97 33 66 · Fax: +45 44 68 15 14 · Web: http://www.mec.dk · E-mail: danmec@vip.cybercity.dk