multimec®

查询"2K03"供应商

3F + 1K + 2K

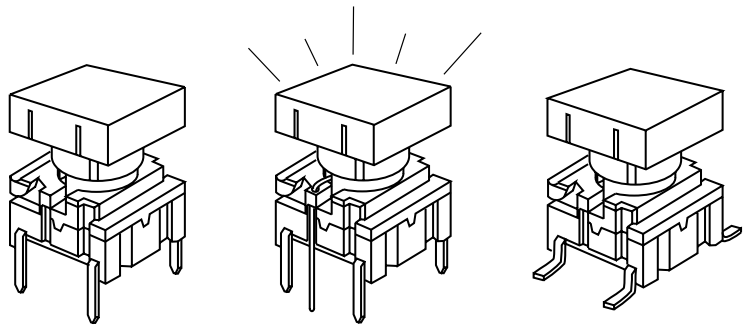

Technical Data:

- through-hole or SMD
- 50mA/24VDC
- single pole/momentary
- 10.000.000 operations life time
- IP67 sealing
- temperature range:
  low temp: -55/+115°C
  high temp: -40/+160℃

Dimensions (through-hole)

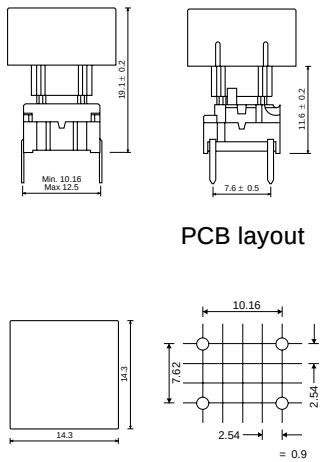

Dimensions (w/LED)

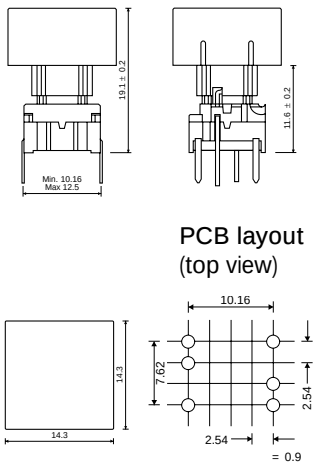

Dimensions (SMD)

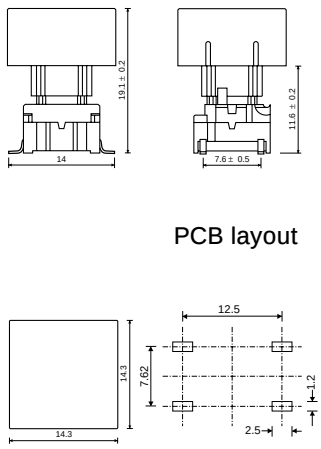

Dimensions (Bezel)
(Optional)

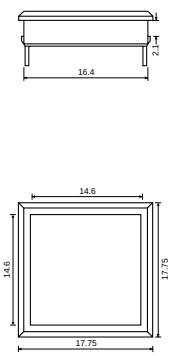

HOW TO ORDER

3 F			+	1 K			1 6	+	2 K	
Switch	**Mounting** **T** through-hole **S** surface mount	**L 6** low temp. **H 9** high temp.		**Cap** 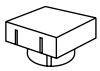	**00** blue **02** green **03** grey **04** yellow **06** white **08** red **09** black				**Bezel**	**03** grey **06** white **08** red **09** black

Standard versions:
3FTL6
3FTH9
3FSH9

3 F				+	1 K 1 1 1 6	+	2 K	
Switch	**Mounting** **T** through-hole	**L 6** low temp. **H 9** high temp.	**LED** **22** green **44** yellow **88** red		**Cap** transparent 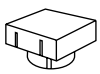		**Bezel**	**03** grey **06** white **08** red **09** black

Standard versions:
3FTL622
3FTL644
3FTL688

Ordering example: 3FTL688 + 1K1116

MEC - Industriparken 23 - P.O. BOX 26 - DK-2750 Ballerup - Denmark
Tel.: +45 44 97 33 66 - Fax: +45 44 68 15 14 - Web: http://www.mec.dk - E-mail: danmec@mec.dk