查询"4304H"供应商

147 Central Avenue
Hackensack, New Jersey 07601
Tel: 201-489-8989 • Fax: 201-489-6911

CHICAGO MINIATURE LAMP, INC.
WHERE INNOVATION COMES TO LIGHT

4304H Series Solid State LED Lamps-Super Brite 30 mcd T-1 3/4 (5mm)

DESCRIPTION AND FEATURES

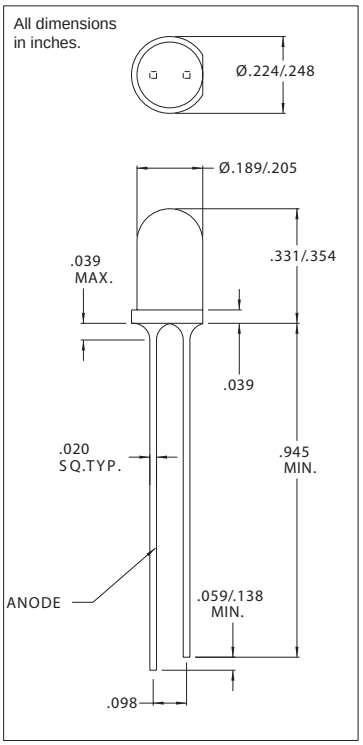

T-1 3/4 Super Brite LEDs
•High-intensity light output.
•Wide viewing angle.

ELECTRO-OPTICAL CHARACTERISTICS AND RATINGS

PART NUMBER	4304H1	4304H3	4304H5	4304H7
Output Color	Red	Amber	Green	Yellow
Diffusion	Diffused	Diffused	Diffused	Diffused
Package Color	Red	Amber	Green	Yellow
Test Current (mA)	10	10	10	10
Forward Voltage Typ. (V)	2.0	2.2	2.1	2.1
Forward Voltage Max. (V)	3.0	3.0	3.0	3.0
Luminous Intensity Min. (mcd)	3.0	4.0	3.0	2.5
Luminous Intensity Typ. (mcd)	6.3	20	10	6.3
Capacitance @ V=0 (pF)	45	4	20	45
Peak Wavelength (nm)	650	608	563	585
Viewing Angle 2θ 1/2 (degrees)	65	60	75	65
Power Dissipation (mW)	60	135	75	60
Reverse Breakdown Voltage Min. (V)	5	5	5	5

Chicago Miniature Lamp reserves the right to make specification revisions that enhance the design and/or performance of the product