查询"5962-88620012A"供应商

REVISIONS			
LTR	DESCRIPTION	DATE (YR-MO-DA)	APPROVED

REV																								
SHEET																								
REV																								
SHEET																								
REV STATUS OF SHEETS	REV																							
	SHEET	1	2	3	4	5	6	7	8	9	10	11												

PMIC N/A	PREPARED BY Marcia B Kelleher	DEFENSE ELECTRONICS SUPPLY CENTER DAYTON, OHIO 45444
STANDARDIZED MILITARY DRAWING	CHECKED BY D Johnson	MICROCIRCUITS, DIGITAL, HIGH SPEED CMOS, 2-INPUT, POSITIVE AND GATE WITH OPEN DRAIN OUTPUTS, MONOLITHIC SILICON
THIS DRAWING IS AVAILABLE FOR USE BY ALL DEPARTMENTS AND AGENCIES OF THE DEPARTMENT OF DEFENSE	APPROVED BY D A Di Lenzo	
	DRAWING APPROVAL DATE 28 JULY 1988	SIZE A / CAGE CODE 67268 / 5962-88620
AMSC N/A	REVISION LEVEL	SHEET 1 OF 11

DESC FORM 193
SEP 87

* U.S. GOVERNMENT PRINTING OFFICE: 1987 — 748-129/60911

5962-E894

DISTRIBUTION STATEMENT A. Approved for public release; distribution is unlimited.

Powered by ICminer.com Electronic-Library Service CopyRight 2003

查询"5962-88620012A"供应商

1. SCOPE

1.1 Scope. This drawing describes device requirements for class B microcircuits in accordance with 1.2.1 of MIL-STD-883, "Provisions for the use of MIL-STD-883 in conjunction with compliant non-JAN devices".

1.2 Part number. The complete part number shall be as shown in the following example:

5962-88620	01	C	X
Drawing number	Device type (1.2.1)	Case outline (1.2.2)	Lead finish per MIL-M-38510

1.2.1 Device type. The device type shall identify the circuit function as follows:

Device type	Generic number	Circuit function
01	54HC09	Quad, 2-input, positive AND gate with open drain outputs

1.2.2 Case outlines. The case outlines shall be as designated in appendix C of MIL-M-38510, and as follows:

Outline letter	Case outline
C	D-1 (14-lead, .785" x .310" x .200"), dual-in-line package
2	C-2 (20-terminal, .358" x .358" x .100"), square chip carrier package

1.3 Absolute maximum ratings.

Supply voltage range 1/	-0.5 V dc to +7.0 V dc
DC input voltage (V_{IN})	-0.5 V dc to V_{CC} +0.5 V dc
DC output voltage (V_{OUT})	-0.5 V dc to V_{CC} +0.5 V dc
Clamp diode current	±20 mA
DC output current (per pin)	±25 mA
DC V_{CC} or GND current (per pin)	±50 mA
Storage temperature range	-65°C to +150°C
Maximum power dissipation (P_D)	500 mW 2/
Lead temperature (soldering, 10 seconds)	+260°C
Thermal resistance, junction-to-case (θ_{JC}):	
Cases C and 2	See MIL-M-38510, appendix C
Junction temperature (T_J)	+175°C

1.4 Recommended operating conditions.

Supply voltage (V_{CC})	+2.0 V dc to +6.0 V dc
Case operating temperature range (T_C)	-55°C to +125°C
Input rise or fall time:	
V_{CC} = 2.0 V	0 to 1000 ns
V_{CC} = 4.5 V	0 to 500 ns
V_{CC} = 6.0 V	0 to 400 ns

1/ Unless otherwise specified, all voltages are referenced to ground.
2/ For T_C = +100°C to +125°C, derate linearly at 12 mW/°C.

Powered by ICminer.com Electronic-Library Service CopyRight 2003

查询"5962-88620012A"供应商

2. APPLICABLE DOCUMENTS

2.1 Government specification and standard. Unless otherwise specified, the following specification and standard, of the issue listed in that issue of the Department of Defense Index of Specifications and Standards specified in the solicitation, form a part of this drawing to the extent specified herein.

SPECIFICATION

MILITARY

MIL-M-38510 - Microcircuits, General Specification for

STANDARD

MILITARY

MIL-STD-883 - Test Methods and Procedures for Microelectronics

(Copies of the specification and standard required by manufacturers in connection with specific acquisition functions should be obtained from the contracting activity or as directed by the contracting activity.)

2.2 Order of precedence. In the event of a conflict between the text of this drawing and the references cited herein, the text of this drawing shall take precedence.

3. REQUIREMENTS

3.1 Item requirements. The individual item requirements shall be in accordance with 1.2.1 of MIL-STD-883, "Provisions for the use of MIL-STD-883 in conjunction with compliant non-JAN devices" and as specified herein.

3.2 Design, construction, and physical dimensions. The design, construction, and physical dimensions shall be as specified in MIL-M-38510 and herein.

3.2.1 Terminal connections. The terminal connections shall be as specified on figure 1.

3.2.2 Truth table. The truth table shall be as specified on figure 2.

3.2.3 Logic diagram. The logic diagram shall be as specified on figure 3.

3.2.4 Case outlines. The case outlines shall be in accordance with 1.2.2 herein.

3.3 Electrical performance characteristics. Unless otherwise specified, the electrical performance characteristics are as specified in table I and apply over the full case operating temperature range.

3.4 Marking. Marking shall be in accordance with MIL-STD-883 (see 3.1 herein). The part shall marked with the part number listed in 1.2 herein. In addition, the manufacturer's part number may also be marked as listed in 6.4 herein.

3.5 Certificate of compliance. A certificate of compliance shall be required from a manufacturer in order to be listed as an approved source of supply in 6.4. The certificate of compliance submitted to DESC-ECS prior to listing as an approved source of supply shall state that the manufacturer's product meets the requirements of MIL-STD-883 (see 3.1 herein) and the requirements herein.

3.6 Certificate of conformance. A certificate of conformance as required in MIL-STD-883 (see 3.1 herein) shall be provided with each lot of microcircuits delivered to this drawing.

Powered by ICminer.com Electronic-Library Service CopyRight 2003

查询"5962-88620012A"供应商

TABLE I. Electrical performance characteristics.

Test	Symbol	Conditions $-55°C \le T_C \le +125°C$ 1/ unless otherwise specified		Group A subgroups	Limits Min	Limits Max	Unit
Low level output voltage	V_{OL}	$V_{IN} = V_{IH}$ or V_{IL}, $I_{OL} = 20\ \mu$	$V_{CC} = 2.0$ V $V_{CC} = 4.5$ V $V_{CC} = 6.0$ V	1, 2, 3		0.1 0.1 0.1	V
		$I_{OL} = 4.0$ mA	$V_{CC} = 4.5$ V			0.4	
		$I_{OL} = 5.2$ mA	$V_{CC} = 6.0$ V			0.4	
High level input voltage	V_{IH}	2/	$V_{CC} = 2.0$ V $V_{CC} = 4.5$ V $V_{CC} = 6.0$ V	1, 2, 3	1.5 3.15 4.2		V
Low level input voltage	V_{IL}	2/	$V_{CC} = 2.0$ V $V_{CC} = 4.5$ V $V_{CC} = 6.0$ V	1, 2, 3		0.3 0.9 1.2	V
Input capacitance	C_{IN}	$V_{CC} = 2.0$ V to 6.0 V, $V_{IN} = 0$ V, $T_C = +25°C$, see 4.3.1c		4		10	pF
Quiescent current	I_{CC}	$V_{CC} = 6.0$ V, $V_{IN} = V_{CC}$ or GND, $I_{OUT} = 0$		1, 2, 3		40	μA
Input leakage current	I_{IN}	$V_{CC} = 6.0$ V, $V_{IN} = V_{CC}$ or GND		1, 2, 3		±1	μA
High level output current	I_{OH}	$V_{CC} = 6.0$ V, $V_O = V_{CC}$, $V_{IN} = V_{IH}$ or V_{IL}		1, 2, 3		10	μA
Functional tests		See 4.3.1d		7			

See footnotes at end of table.

Powered by ICminer.com Electronic-Library Service CopyRight 2003

查询"5962-88620012A"供应商

TABLE I. Electrical performance characteristics - Continued.

Test	Symbol	Conditions $-55°C \le T_C \le +125°C$ 1/ unless otherwise specified		Group A subgroups	Limits Min	Limits Max	Unit
Propagation delay time See figure 4 3/	t_{PLH}	$T_C = +25°C$, $C_L = 50$ pF ±10%	$V_{CC} = 2.0$ V	9		105	ns
			$V_{CC} = 4.5$ V			25	
			$V_{CC} = 6.0$ V			23	
		$T_C = -55°C, +125°C$, $C_L = 50$ pF ±10%	$V_{CC} = 2.0$ V	10,11		155	ns
			$V_{CC} = 4.5$ V			36	
			$V_{CC} = 6.0$ V			31	
	t_{PHL}	$T_C = +25°C$, $C_L = 50$ pF ±10%	$V_{CC} = 2.0$ V	9		100	ns
			$V_{CC} = 4.5$ V			20	
			$V_{CC} = 6.0$ V			17	
		$T_C = -55°C, +125°C$, $C_L = 50$ pF ±10%	$V_{CC} = 2.0$ V	10,11		150	ns
			$V_{CC} = 4.5$ V			30	
			$V_{CC} = 6.0$ V			25	
Transition time See figure 4 4/	t_{THL}	$T_C = +25°C$, $C_L = 50$ pF ±10%	$V_{CC} = 2.0$ V	9		75	ns
			$V_{CC} = 4.5$ V			15	
			$V_{CC} = 6.0$ V			13	
		$T_C = -55°C, +125°C$, $C_L = 50$ pF ±10%	$V_{CC} = 2.0$ V	10,11		110	ns
			$V_{CC} = 4.5$ V			22	
			$V_{CC} = 6.0$ V			19	

1/ For a power supply of 5.0 V ±10 percent the worst case output voltage (V_{OL}) occurs for HC at 4.5 V. Thus, the 4.5 V values should be used when designing with this supply. Worst case V_{IH} and V_{IL} occur at V_{CC} = 5.5 V and 4.5 V, respectively.

2/ Test not required if applied as a forcing function for V_{OL}.

3/ AC testing at V_{CC} = 2.0 V and V_{CC} = 6.0 V shall be guaranteed, if not tested, to the specified parameters.

4/ Transition time (t_{THL}) if not tested, shall be guaranteed to the specified parameters.

Powered by ICminer.com Electronic-Library Service CopyRight 2003

查询"5962-88620012A"供应商

Device type	01	01
Package	C	2
Terminal number	Terminal symbol	
1	1A	NC
2	1B	1A
3	1Y	1B
4	2A	1Y
5	2B	NC
6	2Y	2A
7	GND	NC
8	3Y	2B
9	3A	2Y
10	3B	GND
11	4Y	NC
12	4A	3Y
13	4B	3A
14	V_{CC}	3B
15	---	NC
16	---	4Y
17	---	NC
18	---	4A
19	---	4B
20	---	V_{CC}

FIGURE 1. Terminal connections.

Powered by ICminer.com Electronic-Library Service CopyRight 2003

查询"5962-88620012A"供应商

Device type 01

Inputs		Output
A	B	Y
H	H	H
L	X	L
X	L	L

H = High level (steady state)
L = Low level (steady state)
X = Don't care

FIGURE 2. Truth table.

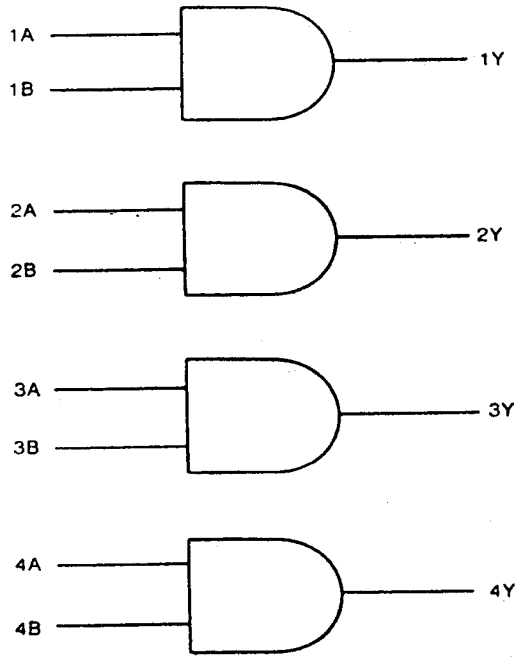

FIGURE 3. Logic diagram.

Powered by ICminer.com Electronic-Library Service CopyRight 2003

查询"5962-88620012A"供应商

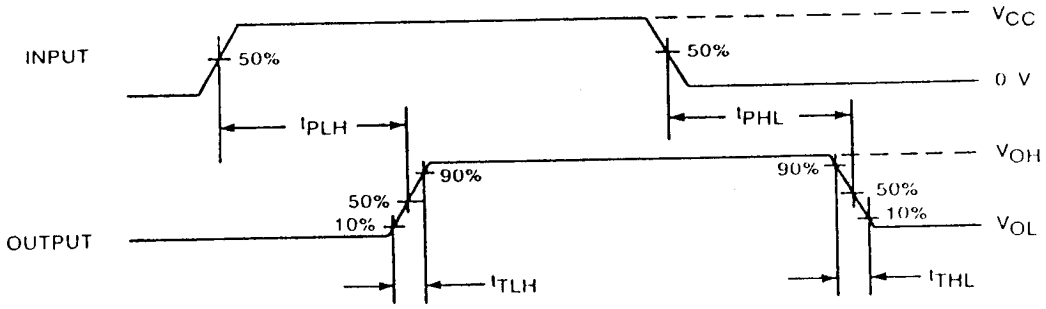

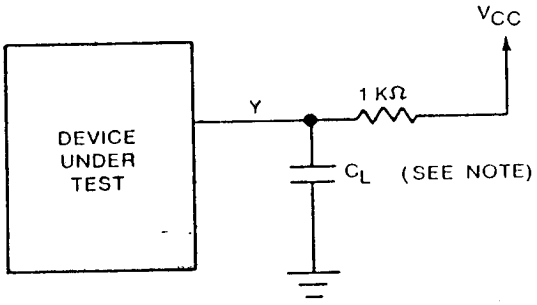

Note: C_L includes probe and test fixture capacitance.

FIGURE 4. Switching waveforms.

Powered by ICminer.com Electronic-Library Service CopyRight 2003

查询"5962-88620012A"供应商

3.7 Notification of change. Notification of change to DESC-ECS shall be required in accordance with MIL-STD-883 (see 3.1 herein).

3.8 Verification and review. DESC, DESC's agent, and the acquiring activity retain the option to review the manufacturer's facility and applicable required documentation. Offshore documentation shall be made available onshore at the option of the reviewer.

4. QUALITY ASSURANCE PROVISIONS

4.1 Sampling and inspection. Sampling and inspection procedures shall be in accordance with section 4 of MIL-M-38510 to the extent specified in MIL-STD-883 (see 3.1 herein).

4.2 Screening. Screening shall be in accordance with method 5004 of MIL-STD-883, and shall be conducted on all devices prior to quality conformance inspection. The following additional criteria shall apply:

a. Burn-in test method 1015 of MIL-STD-883.

(1) Test condition A, B, C, or D using the circuit submitted with the certificate of compliance (see 3.5 herein).

(2) T_A = +125°C, minimum.

b. Interim and final electrical test parameters shall be as specified in table II herein, except interim electrical parameter tests prior to burn-in are optional at the discretion of the manufacturer.

4.3 Quality conformance inspection. Quality conformance inspection shall be in accordance with method 5005 of MIL-STD-883 including groups A, B, C, and D inspections. The following additional criteria shall apply.

4.3.1 Group A inspection.

a. Tests shall be as specified in table II herein.

b. Subgroups 5, 6, and 8 in table I, method 5005 of MIL-STD-883 shall be omitted.

c. Subgroup 4 (C_{IN} measurement) shall be measured only for the initial test and after process or design changes which may affect input capacitance.

d. Subgroup 7 tests sufficient to verify the truth table.

4.3.2 Groups C and D inspections.

a. End-point electrical parameters shall be as specified in table II herein.

b. Steady-state life test method 1005 of MIL-STD-883 conditions:

(1) Test condition A, B, C, or D using the circuit submitted with the certificate of compliance (see 3.5 herein).

(2) T_A = +125°C, minimum.

(3) Test duration: 1,000 hours, except as permitted by method 1005 of MIL-STD-883.

Powered by ICminer.com Electronic-Library Service CopyRight 2003

查询"5962-88620012A"供应商

TABLE II. Electrical test requirements.

MIL-STD-883 test requirements	Subgroups (per method 5005, table I)
Interim electrical parameters (method 5004)	----
Final electrical test parameters (method 5004)	1*,2,9
Group A test requirements (method 5005)	1,2,3,4**, 7,9,10,11
Groups C and D end-point electrical parameters (method 5005)	1,2,3

* PDA applies to subgroup 1.
** See 4.3.1c

5. PACKAGING

5.1 Packaging requirements. The requirements for packaging shall be in accordance with MIL-M-38510.

6. NOTES

6.1 Intended use. Microcircuits conforming to this drawing are intended for use when military specifications do not exist and qualified military devices that will perform the required function are not available for OEM application. When a military specification exists and the product covered by this drawing has been qualified for listing on QPL-38510, the device specified herein will be inactivated and will not be used for new design. The QPL-38510 product shall be the preferred item for all applications.

6.2 Replaceability. Microcircuits covered by this drawing will replace the same generic device covered by a contractor-prepared specification or drawing.

6.3 Comments. Comments on this drawing should be directed to DESC-ECS, Dayton, Ohio 45444, or telephone 513-296-5375.

Powered by ICminer.com Electronic-Library Service CopyRight 2003

查询"5962-88620012A"供应商

6.4 Approved source of supply. An approved source of supply is listed herein. Additional sources will be added as they become available. The vendor listed herein has agreed to this drawing and a certificate of compliance (see 3.5 herein) has been submitted to DESC-ECS.

Military drawing part number	Vendor CAGE number	Vendor similar part number 1/
5962-8862001CX	01295	SNJ54HC09J
5962-88620012X	01295	SNJ54HC09FK

1/ Caution. Do not use this number for item acquisition. Items acquired by this number may not satisfy the performance requirements of this drawing.

Vendor CAGE number	Vendor name and address
01295	Texas Instruments, Incorporated P.O. Box 6448 Midland, TX 79711

Powered by ICminer.com Electronic-Library Service CopyRight 2003