查询"MAX9118EXK"供应商

RELIABILITY REPORT

FOR

MAX9118EXK

PLASTIC ENCAPSULATED DEVICES

April 6, 2004

MAXIM INTEGRATED PRODUCTS

120 SAN GABRIEL DR.

SUNNYVALE, CA 94086

Written by

Jim Pedicord
Quality Assurance
Reliability Lab Manager

Reviewed by

Bryan J. Preeshl
Quality Assurance
Executive Director

查询"MAX9118EXK"供应商

Conclusion

The MAX9118 successfully meets the quality and reliability standards required of all Maxim products. In addition, Maxim's continuous reliability monitoring program ensures that all outgoing product will continue to meet Maxim's quality and reliability standards.

Table of Contents

I. .....Device Description
II. .....Manufacturing Information
III. .....Packaging Information
V. .....Quality Assurance Information
VI. .....Reliability Evaluation
IV. .....Die Information
.....Attachments

I. Device Description

A. General

The MAX9118 nanopower comparator a in space-saving SC70 packages feature Beyond-the-Rails™ inputs and are is guaranteed to operate down to +1.8V. The MAX9118 features an on-board 1.252V ±1.75% reference and draw an ultra-low supply current of only 600nA. This feature makes the MAX9118 comparator ideal for all 2-cell battery monitoring/management applications.

The unique design of the output stage limits supply-current surges while switching, virtually eliminating the supply glitches typical of many other comparators. This design also minimizes overall power consumption under dynamic conditions. The MAX9118 has an open-drain output stage that makes them suitable for mixed-voltage system design. Large internal output drivers allow Rail-to-Rail® output swing with loads up to 5mA. The device is available in the ultra-small 5-pin SC70 package.

B. Absolute Maximum Ratings

Item	Rating
Supply Voltage (VCC to VEE)	+6V
Voltage Inputs (IN+, IN-, REF)	(VEE - 0.3V) to (VCC + 0.3V)
Output Voltage	(VEE - 0.3V) to (VCC + 0.3V)
Current Into Input Pins	20mA
Output Current	±50mA
Output Short-Circuit Duration	10s
Operating Temperature Range	-40°C to +85°C
Junction Temperature	+150°C
Storage Temperature Range	-65°C to +150°C
Lead Temperature (soldering, 10s)	+300°C
Continuous Power Dissipation (TA = +70°C)	
5-Pin SC70	200mW
Derates above +70°C	
5-Pin SC70	2.5mW/°C

II. Manufacturing Information

查询"MAX9118EXK"供应商

A. Description/Function: SC70, 1.8V, Nanopower, Beyond-the-Rails Comparators With Reference

B. Process: B8 (Standard 0.8 micron silicon gate CMOS)

C. Number of Device Transistors: 98

D. Fabrication Location: California, USA

E. Assembly Location: Malaysia or Philippines

F. Date of Initial Production: January, 2001

III. Packaging Information

A. Package Type: **5-Pin SC70**

B. Lead Frame: Alloy 42 or Copper

C. Lead Finish: Solder Plate

D. Die Attach: Silver-Filled Epoxy

E. Bondwire: Gold (1.0 mil dia.)

F. Mold Material: Epoxy with silica filler

G. Assembly Diagram: # 05-1501-0220

H. Flammability Rating: Class UL94-V0

I. Classification of Moisture Sensitivity per JEDEC standard J-STD-020-A: Level 1

IV. Die Information

A. Dimensions: 31 x 30 mils

B. Passivation: Si_3N_4/SiO_2 (Silicon nitride/ Silicon dioxide)

C. Interconnect: Aluminum/Si (Si = 1%)

D. Backside Metallization: None

E. Minimum Metal Width: 0.8 microns (as drawn)

F. Minimum Metal Spacing: 0.8 microns (as drawn)

G. Bondpad Dimensions: 5 mil. Sq.

H. Isolation Dielectric: SiO_2

I. Die Separation Method: Wafer Saw

V. Quality Assurance Information

查询"MAX9118EXK"供应商

A. Quality Assurance Contacts: Jim Pedicord (Reliability Lab Manager)
Bryan Preeshl (Executive Director)
Kenneth Huening (Vice President)

B. Outgoing Inspection Level: 0.1% for all electrical parameters guaranteed by the Datasheet.
0.1% For all Visual Defects.

C. Observed Outgoing Defect Rate: < 50 ppm

D. Sampling Plan: Mil-Std-105D

VI. Reliability Evaluation

A. Accelerated Life Test

The results of the 135°C biased (static) life test are shown in **Table 1**. Using these results, the Failure Rate (λ) is calculated as follows:

$$\lambda = \frac{1}{MTTF} = \frac{1.83}{192 \times 4389 \times 80 \times 2}$$ (Chi square value for MTTF upper limit)

Temperature Acceleration factor assuming an activation energy of 0.8eV

$\lambda = 13.57 \times 10^{-9}$

λ = 13.57 F.I.T. (60% confidence level @ 25°C)

This low failure rate represents data collected from Maxim's reliability monitor program. In addition to routine production Burn-In, Maxim pulls a sample from every fabrication process three times per week and subjects it to an extended Burn-In prior to shipment to ensure its reliability. The reliability control level for each lot to be shipped as standard product is 59 F.I.T. at a 60% confidence level, which equates to 3 failures in an 80 piece sample. Maxim performs failure analysis on any lot that exceeds this reliability control level. Attached Burn-In Schematic (Spec. # 06-5415) shows the static Burn-In circuit. Maxim also performs quarterly 1000 hour life test monitors. This data is published in the Product Reliability Report (**RR-1M**).

B. Moisture Resistance Tests

Maxim pulls pressure pot samples from every assembly process three times per week. Each lot sample must meet an LTPD = 20 or less before shipment as standard product. Additionally, the industry standard 85°C/85%RH testing is done per generic device/package family once a quarter.

C. E.S.D. and Latch-Up Testing

The CM82-1 die type has been found to have all pins able to withstand a transient pulse of ±2000V, per Mil-Std-883 Method 3015 (reference attached ESD Test Circuit). Latch-Up testing has shown that this device withstands a current of ±250mA.

查询"MAX9118EXK"供应商

Table 1
Reliability Evaluation Test Results

MAX9118EXK

TEST ITEM	TEST CONDITION	FAILURE IDENTIFICATION	PACKAGE	SAMPLE SIZE	NUMBER OF FAILURES
Static Life Test (Note 1)					
	Ta = 135°C Biased Time = 192 hrs.	DC Parameters & functionality		80	0
Moisture Testing (Note 2)					
Pressure Pot	Ta = 121°C P = 15 psi. RH= 100% Time = 168hrs.	DC Parameters & functionality	SC70	77	0
85/85	Ta = 85°C RH = 85% Biased Time = 1000hrs.	DC Parameters & functionality		77	0
Mechanical Stress (Note 2)					
Temperature Cycle	-65°C/150°C 1000 Cycles Method 1010	DC Parameters & functionality		77	0

Note 1: Life Test Data may represent plastic DIP qualification lots.
Note 2: Generic Package/Process data

查询"MAX9118EXK"供应商

TABLE II. Pin combination to be tested. 1/ 2/

	Terminal A (Each pin individually connected to terminal A with the other floating)	Terminal B (The common combination of all like-named pins connected to terminal B)
1.	All pins except V_{PS1} 3/	All V_{PS1} pins
2.	All input and output pins	All other input-output pins

1/ Table II is restated in narrative form in 3.4 below.
2/ No connects are not to be tested.
3/ Repeat pin combination I for each named Power supply and for ground

(e.g., where V_{PS1} is V_{DD}, V_{CC}, V_{SS}, V_{BB}, GND, $+V_S$, $-V_S$, V_{REF}, etc).

3.4 Pin combinations to be tested.

a. Each pin individually connected to terminal A with respect to the device ground pin(s) connected to terminal B. All pins except the one being tested and the ground pin(s) shall be open.

b. Each pin individually connected to terminal A with respect to each different set of a combination of all named power supply pins (e.g., V_{SS1}, or V_{SS2} or V_{SS3} or V_{CC1}, or V_{CC2}) connected to terminal B. All pins except the one being tested and the power supply pin or set of pins shall be open.

c. Each input and each output individually connected to terminal A with respect to a combination of all the other input and output pins connected to terminal B. All pins except the input or output pin being tested and the combination of all the other input and output pins shall be open.

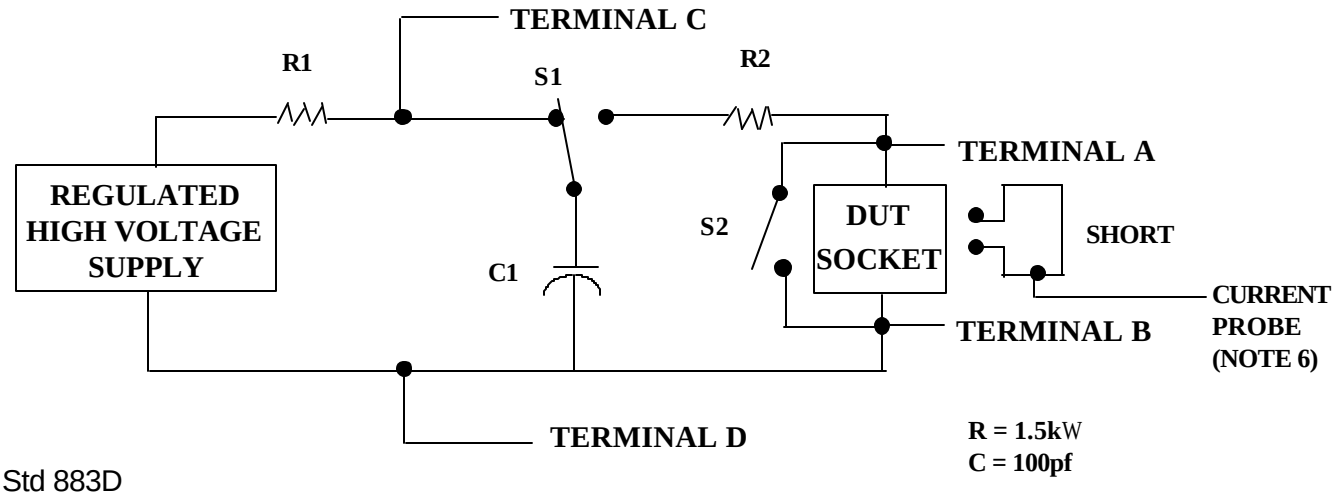

查询"MAX9118EXK"供应商

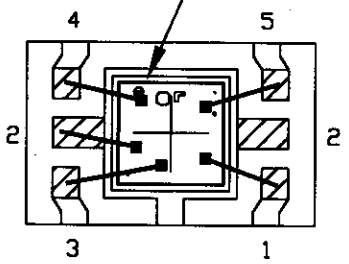

▨ BONDABLE AREA

NOTE: CAVITY DOWN

PKG. CODE: X5-1		SIGNATURES	DATE	MAXIM CONFIDENTIAL & PROPRIETARY	
CAV./PAD SIZE: 35x34	PKG.		7/03/02	BOND DIAGRAM #: 05-1501-0220	REV: A
	DESIGN	Ronald B. Koo	7/5/02		

查询"MAX9118EXK"供应商

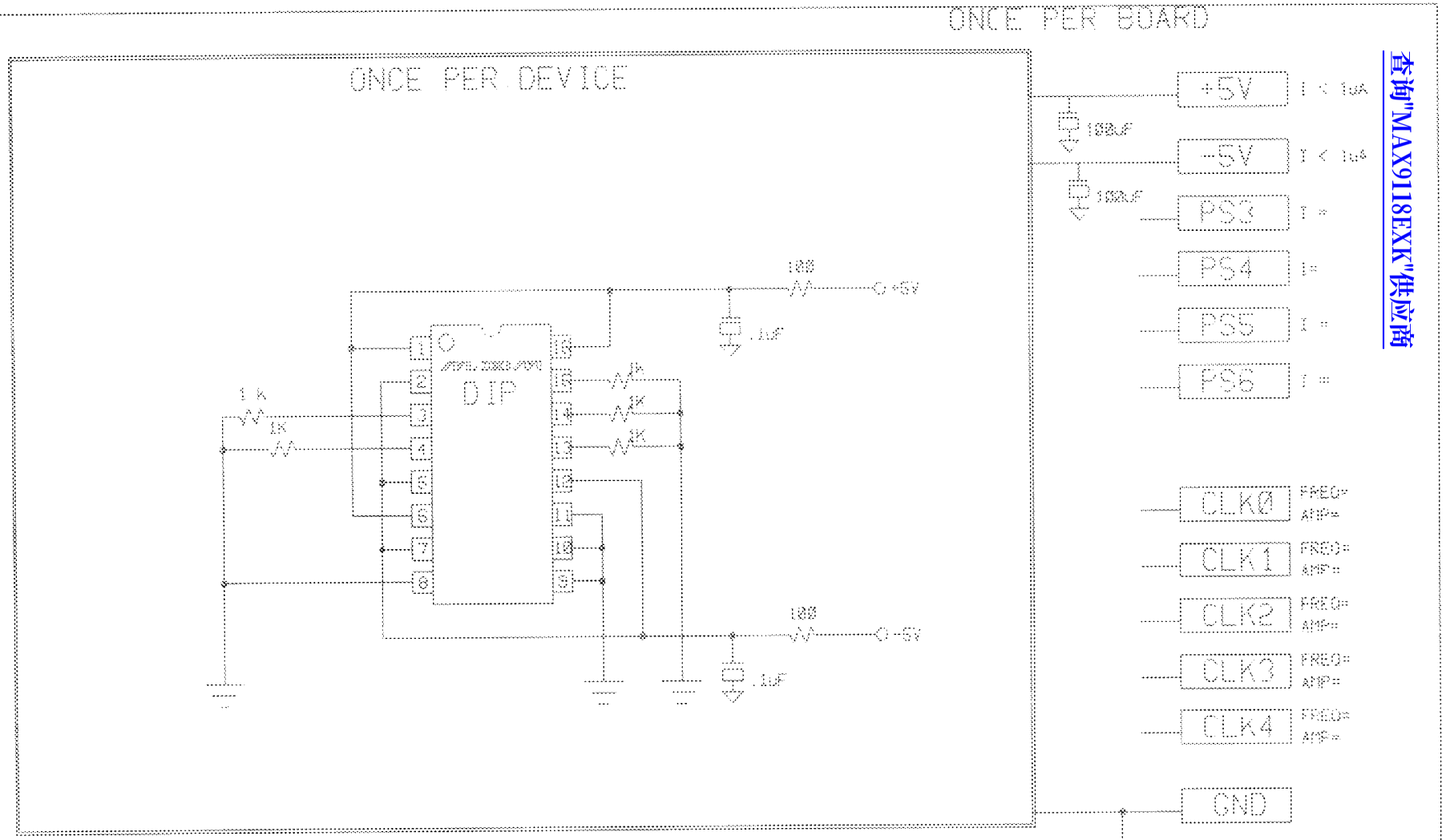

- STEADY STATE LIFE TEST IS PER MIL-STD-883 METHOD 1005
- BURN-IN IS PER MIL-STD-883 METHOD 1015, COND. B

NOTES:

1. TEMPERATURE: 125C OR EQUIVALENT
2. TIME: 160 HOURS MIN. OR EQUIVALENT
3. ALL COMPONENTS AND MATERIAL MUST STAND 150C CONTINUOUS
4. APPROVED FOR [X] COMMERCIAL
   [X] MR/883

SPEC. NO. 06-5145 REV: A	MAXIM BURN-IN SCHEMATIC
DATE: 9/21/95	DEVICE TYPE(S): MAX4051/52/53
DRAWN BY: R. TARIGA	

REVISION HISTORY

REV	CHANGES MADE	DATE	INIT.
A	查询"MAX9118EXK"供应商 ASE.	9/23/95	RT

查询"MAX9118EXK"供应商

ONCE PER SOCKET

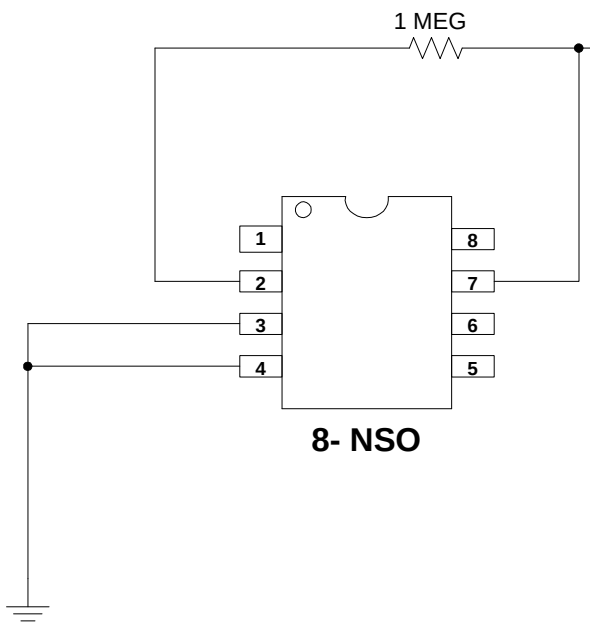

DEVICES: MAX 917/918/919/920/9117/9118/9119/9120.
MAX. EXPECTED CURRENT = 5 uA

DRAWN BY: TODD BEJSOVEC
NOTES:

DOCUMENT I.D. 06-5415	**REVISION** B	***MAXIM*** **TITLE: 883 BI Circuit (MAX 917/918/919/920/9117/9118/9119/9120)**