查询"JGV"供应商

JGV SERIES

NEW

105°C Long Life, High Temperature Reflow Soldering.

◆FEATURES

- Load Life : 105°C 2000 hours.
- High Temperature reflow soldering is available.
- Available for high density mounting.
- RoHS compliance.

◆SPECIFICATIONS

Items	Characteristics
Category Temperature Range	−55 ~+105°C
Rated Voltage Range	6.3 ~ 50V.DC
Capacitance Tolerance	±20% (20°C, 120Hz)
Leakage Current(MAX)	I=0.01CV or 3 μA whichever is greater. (After 2 minutes application of rated voltage) I=Leakage Current(μA) C=Rated Capacitance(μF) V=Rated Voltage(V)
Dissipation Factor(MAX) (tanδ)	(20°C, 120Hz)
Endurance	After applying rated voltage with rated ripple current for 2000 hrs at 105°C, the capacitors shall meet the following requirements.
Low Temperature Stability Impedance Ratio(MAX)	(120Hz)

Dissipation Factor (tanδ):

Rated Voltage (V)		6.3	10	16	25	35	50
tanδ	φ4,φ5,φ6.3×6.1	0.30	0.24	0.20	0.16	0.14	0.12
	φ6.3×8,φ8~φ10	0.35	0.26	0.24	0.18	0.14	0.12

When rated capacitance is over 1000 μF, tanδ shall be added 0.02 to the listed value with increase of every 1000 μF.

Endurance:

Capacitance Change	Within ±25% of the initial value.
Dissipation Factor	Not more than 200% of the specified value.
Leakage Current	Not more than the specified value.

Low Temperature Stability Impedance Ratio(MAX):

Rated Voltage (V)	6.3	10	16	25	35	50
Z(−25°C) /Z(20°C)	4	3	2	2	2	2
Z(−40°C) /Z(20°C)	8	8	4	4	3	3

◆MULTIPLIER FOR RIPPLE CURRENT

Frequency coefficient

Frequency (Hz)		60(50)	120	500	1k	10k≦
Coefficient	0.1~1 μF	0.50	1.00	1.20	1.30	1.50
	2.2~4.7 μF	0.65	1.00	1.20	1.30	1.50
	10~47 μF	0.80	1.00	1.20	1.30	1.50
	100~1000 μF	0.80	1.00	1.10	1.15	1.20

◆MARKING

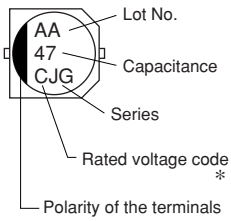

*Voltage Code

Rated Voltage (V)	6.3	10	16	25	35	50
Rated Voltage code	j	A	C	E	V	H

◆PART NUMBER

□□□	JGV	□□□□□	□	□□□	D×L
Rated Voltage	Series	Rated Capacitance	Capacitance Tolerance	Option	Case Size

查询"JGV"供应商

◆DIMENSIONS

(mm)

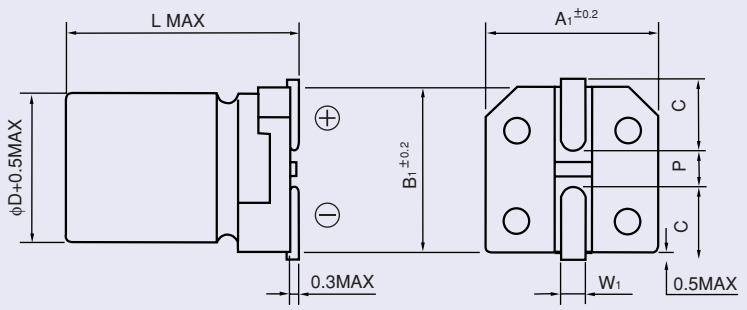

φD	L	A1	B1	C	W1	P
4	6.1	4.3	4.3	1.8	0.5~0.8	1.0
5	6.1	5.3	5.3	2.2	0.5~0.8	1.3
6.3	6.1	6.6	6.6	2.7	0.5~0.8	1.8
6.3	8	6.6	6.6	2.7	0.5~0.8	1.8
8	10.5	8.3	8.3	2.9	0.8~1.1	3.1
10	10.5	10.3	10.3	3.2	0.8~1.1	4.5

◆STANDARD SIZE, RATED RIPPLE CURRENT

Size φD×L(mm), Ripple Current (mA r.m.s./105°C, 120Hz)

WV(V.DC) / Cap(μF)	6.3 (0J)		10 (1A)		16 (1C)		25 (1E)		35 (1V)		50 (1H)	
	Size	Ripple	Size	Ripple	Size	Ripple	Size	Ripple	Size	Ripple	Size	Ripple
0.1											4 × 6.1	1.0
0.22											4 × 6.1	2.6
0.33											4 × 6.1	3.2
0.47											4 × 6.1	4.0
1											4 × 6.1	8.0
2.2											4 × 6.1	11
3.3											4 × 6.1	14
4.7									4 × 6.1	15	5 × 6.1	19
10					4 × 6.1	28			5 × 6.1	28	6.3 × 6.1	35
22	4 × 6.1	26			5 × 6.1	39			6.3 × 6.1	55	6.3 × 8	67
33	4 × 6.1	29	5 × 6.1	43			6.3 × 6.1	65	6.3 × 8	76	8 × 10.5	140
47	5 × 6.1	46			6.3 × 6.1	70	6.3 × 8	79			8 × 10.5 10 × 10.5	167 180
100	6.3 × 6.1	71	6.3 × 6.1	71	6.3 × 8	111	8 × 10.5	180	8 × 10.5 10 × 10.5	180 305	8 × 10.5 10 × 10.5	230 315
220	6.3 × 8	121			8 × 10.5	185	8 × 10.5 10 × 10.5	320 355	10 × 10.5	450		
330			8 × 10.5	195	8 × 10.5 10 × 10.5	290 440	10 × 10.5	450				
470	8 × 10.5	210	8 × 10.5 10 × 10.5	210 440	8 × 10.5 10 × 10.5	320 460	10 × 10.5	490				
1000	10 × 10.5	495										