ISOLATED 3.3-V FULL AND HALF-DUPLEX RS-485 TRANSCEIVERS

FEATURES

- **4000-V_{PEAK} Isolation, 560-Vpeak V_{IORM} UL 1577, IEC 60747-5-2 (VDE 0884, Rev 2)**
- **1/8 Unit Load – Up to 256 Nodes on a Bus**
- **Meets or Exceeds TIA/EIA RS-485 Requirements**
- **Signaling Rates up to 1 Mbps**
- **Thermal Shutdown Protection**
- **Low Bus Capacitance – 16 pF (Typ)**
- **50 kV/µs Typical Transient Immunity**
- **Fail-safe Receiver for Bus Open, Short, Idle**
- **3.3-V Inputs are 5-V Tolerant**

APPLICATIONS

- **Security Systems**
- **Chemical Production**
- **Factory Automation**
- **Motor/motion Control**
- **HVAC and Building Automation Networks**
- **Networked Security Stations**

DESCRIPTION

The ISO15 is an isolated half-duplex differential line transceiver while the ISO35 is an isolated full-duplex differential line driver and receiver for TIA/EIA 485/422 applications.

These devices are ideal for long transmission lines since the ground loop is broken to allow for a much larger common-mode voltage range. The symmetrical isolation barrier of the device is tested to provide 2500 Vrms of isolation for 60s between the bus-line transceiver and the logic-level interface.

Any cabled I/O can be subjected to electrical noise transients from various sources. These noise transients can cause damage to the transceiver and/or near-by sensitive circuitry if they are of sufficient magnitude and duration. These isolated devices can significantly increase protection and reduce the risk of damage to expensive control circuits.

The ISO15 and ISO35 are qualified for use from –40°C to 85°C.

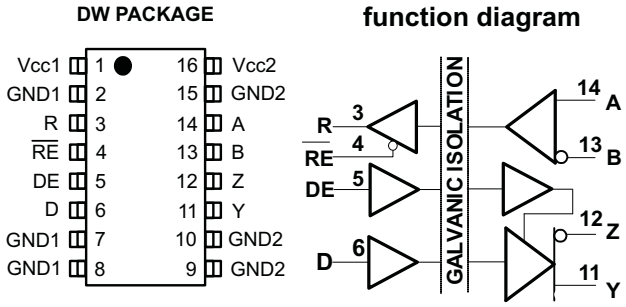

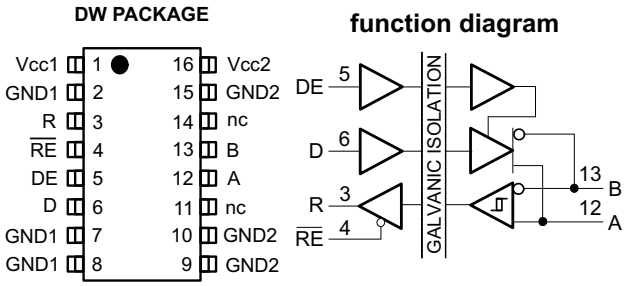

Please be aware that an important notice concerning availability, standard warranty, and use in critical applications of Texas Instruments semiconductor products and disclaimers thereto appears at the end of this data sheet.

PRODUCTION DATA information is current as of publication date. Products conform to specifications per the terms of the Texas Instruments standard warranty. Production processing does not necessarily include testing of all parameters.

Copyright © 2008, Texas Instruments Incorporated

查询"ISO15DW"供应商

These devices have limited built-in ESD protection. The leads should be shorted together or the device placed in conductive foam during storage or handling to prevent electrostatic damage to the MOS gates.

ABSOLUTE MAXIMUM RATINGS(1)

					VALUE	UNIT
V_{CC}	Input supply voltage. (2) V_{CC1}, V_{CC2}				–0.3 to 6	V
V_O	Voltage at any bus I/O terminal				–9 to 14	V
V_{IT}	Voltage input, transient pulse, A, B, Y, and Z (through 100Ω, see Figure 11)				–50 to 50	V
V_I	Voltage input at any D, DE or $\overline{RE}$ terminal				–0.5 to 7	V
I_O	Receiver output current				±10	mA
ESD	Electrostatic discharge	Human Body Model	JEDEC Standard 22, Test Method A114-C.01	Bus pins and GND1	±6	kV
				Bus pins and GND2	±16	
				All pins	±4	
		Charged Device Model	JEDEC Standard 22, Test Method C101	All pins	±1	kV
		Machine Model	ANSI/ESDS5.2-1996		±200	V
T_J	Maximum junction temperature				170	°C

(1) Stresses beyond those listed under *absolute maximum ratings* may cause permanent damage to the device. These are stress ratings only and functional operation of the device at these or any other conditions beyond those indicated under *recommended operating conditions* is not implied. Exposure to absolute-maximum-rated conditions for extended periods may affect device reliability.
(2) All voltage values except differential I/O bus voltages are with respect to network ground terminal and are peak voltage values

RECOMMENDED OPERATING CONDITIONS

			MIN	TYP	MAX	UNIT
V_{CC}	Supply Voltage, V_{CC1}, V_{CC2}		3.15	3.3	3.6	V
V_{OC}	Voltage at either bus I/O terminal	A, B	–7		12	V
V_{IH}	High-level input voltage	D, DE, $\overline{RE}$	2		V_{CC}	V
V_{IL}	Low-level input voltage		0		0.8	
V_{ID}	Differential input voltage	A with respect to B	–12		12	V
R_L	Differential input resistance		54	60		Ω
I_O	Output current	Driver	–60		60	mA
		Receiver	–8		8	
T_J	Operating junction temperature		–40		150	°C

SUPPLY CURRENT

over recommended operating condition (unless otherwise noted)

PARAMETER			TEST CONDITIONS	MIN	TYP	MAX	UNIT
I_{CC1}	Logic-side supply current	ISO35	$\overline{RE}$ at 0 V or Vcc, DE at 0 V, No load (driver disabled)			8	mA
			$\overline{RE}$ at 0 V or Vcc, DE at V_{CC}, No Load (driver enabled)			8	
		ISO15	$\overline{RE}$ at 0 V or Vcc, DE at 0 V, No load (driver disabled)			8	mA
			$\overline{RE}$ at 0 V or Vcc, DE at V_{CC}, No Load (driver enabled)			8	
I_{CC2}	Bus-side supply current	ISO35	$\overline{RE}$ at 0 V or Vcc, DE at 0 V, No load (driver disabled)			15	mA
			$\overline{RE}$ at 0 V or Vcc, DE at V_{CC}, No Load (driver enabled)			19	
		ISO15	$\overline{RE}$ at 0 V or Vcc, DE at 0 V, No load (driver disabled)			15	mA
			$\overline{RE}$ at 0 V or Vcc, DE at V_{CC}, No Load (driver enabled)			19	

Copyright © 2008, Texas Instruments Incorporated

查询"ISO15DW"供应商

DRIVER ELECTRICAL CHARACTERISTICS

over recommended operating conditions (unless otherwise noted)

PARAMETER		TEST CONDITIONS			MIN	TYP	MAX	UNIT
$\lvert V_{OD} \rvert$	Differential output voltage magnitude	I_O = 0 mA, no load			2.5		V_{CC}	V
		R_L = 54 Ω, See Figure 1			1.5	2		
		R_L = 100 Ω (RS-422), See Figure 1			2	2.3		
		V_{test} from –7 V to +12 V, See Figure 2			1.5			
$\Delta\lvert V_{OD}\rvert$	Change in magnitude of the differential output voltage	See Figure 1 and Figure 2			–0.2	0	0.2	V
$V_{OC(SS)}$	Steady-state common-mode output voltage	See Figure 3			1	2.6	3	V
$\Delta V_{OC(SS)}$	Change in steady-state common-mode output voltage	See Figure 3			–0.1		0.1	V
$V_{OC(pp)}$	Peak-to-peak common-mode output voltage	See Figure 3				0.5		V
I_I	Input current	D, DE, V_I at 0 V or V_{CC1}			–10		10	µA
I_{OZ}	High-impedance state output current	ISO15	See receiver input current					µA
		IDO35	V_Y or V_Z = 12 V	Other input at 0 V			90	
			V_Y or V_Z = 12 V, V_{CC} = 0		–10			
			V_Y or V_Z = –7 V				90	
			V_Y or V_Z = –7 V, V_{CC} = 0		–10			
I_{OS}	Short-circuit output current	V_A or V_B at –7 V		Other input at 0 V	–250		250	mA
		V_A or V_B at 12 V						
$C_{(OD)}$	Differential output capacitance	V_I = 0.4 sin (4E6πt) + 0.5 V, DE at 0 V				16		pF
CMTI	Common-mode transient immunity	V_I = V_{CC} or 0 V, See Figure 12 and Figure 13			25	50		kV/µs

DRIVER SWITCHING CHARACTERISTICS

over recommended operating conditions (unless otherwise noted)

PARAMETER		TEST CONDITIONS	MIN	TYP	MAX	UNIT
t_{PLH}, t_{PHL}	Propagation delay	See Figure 4			340	ns
$t_{sk(p)}$	Pulse skew ($\lvert t_{PHL} – t_{PLH}\rvert$)	See Figure 4		6		ns
t_r	Differential output signal rise time	See Figure 4	120	185	300	ns
t_f	Differential output signal fall time	See Figure 5	120	180	300	ns
t_{PHZ}	Propagation delay, high-level-to-high-impedance output	See Figure 5			205	µs
t_{PZH}	Propagation delay, high-impedance-to-high-level output	See Figure 6			530	µs
t_{PLZ}	Propagation delay, low-level to high-impedance output	See Figure 6			330	µs
t_{PZL}	Propagation delay, standby-to-low-level output	See Figure 6			530	µs

Copyright © 2008, Texas Instruments Incorporated

查询"ISO15DW"供应商

RECEIVER ELECTRICAL CHARACTERISTICS

over recommended operating conditions (unless otherwise noted)

PARAMETER		TEST CONDITIONS		MIN	TYP	MAX	UNIT
$V_{IT(+)}$	Positive-going input threshold voltage	I_O = –8 mA				–20	mV
$V_{IT(-)}$	Negative-going input threshold voltage	I_O = 8 mA		–200			mV
V_{hys}	Hysteresis voltage (V_{IT+} – V_{IT-})				50		mV
V_O	Output voltage	V_{ID} = 200 mV, See Figure 7	I_O = –8 mA	2.4			V
			I_O = 8 mA			0.4	
$I_{O(Z)}$	High-impedance state output current	V_I = –7 to 12 V, Other input = 0 V		–1		1	µA
I_A or I_B	Bus input current	V_A or V_B = 12 V	Other input at 0 V		0.05	0.1	mA
		V_A or V_B = 12 V, V_{CC} = 0			0.05	0.1	
		V_A or V_B = –7 V		–0.1	–0.04		
		V_A or V_B = –7 V, V_{CC} = 0		–0.1	–0.03		
I_{IH}	High-level input current, $\overline{RE}$	V_{IH} = 2 V		–10			µA
I_{IL}	Low-level input current, $\overline{RE}$	V_{IL} = 0.8 V		–10			µA
R_{ID}	Differential input resistance	A, B		48			kΩ
C_D	Differential input capacitance	V_I = 0.4 sin (4E6πt) + 0.5V, DE at 0 V			16		pF

RECEIVER SWITCHING CHARACTERISTICS

over recommended operating conditions (unless otherwise noted)

PARAMETER			TEST CONDITIONS	MIN	TYP	MAX	UNIT
t_{PLH}, t_{PHL}	Propagation delay	ISO15	See Figure 8			100	ns
		ISO35				100	
$t_{sk(p)}$	Pulse skew (|t_{PHL} – t_{PLH}|)	ISO15				13	ns
		ISO35				13	
t_r	Output signal rise time				2	4	ns
t_f	Output signal fall time				2	4	
t_{PZH}, t_{PZL}	Propagation delay, high-impedance-to-high-level output Propagation delay, standby-to-low-level output		DE at 0 V, See Figure 9 and Figure 10		13	25	ns
t_{PHZ}, t_{PLZ}	Propagation delay, high-level-to-high-impedance output Propagation delay, low-level to high-impedance output				13	25	ns

Copyright © 2008, Texas Instruments Incorporated

查询"ISO15DW"供应商

PARAMETER MEASUREMENT INFORMATION

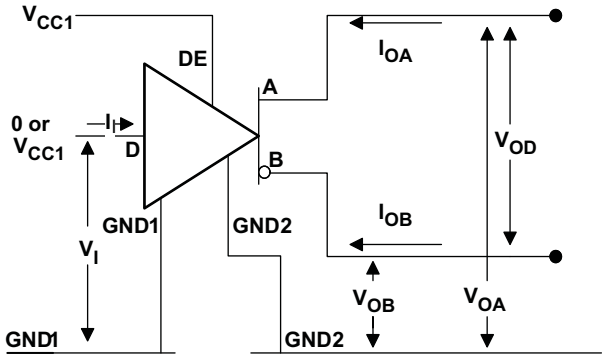

Figure 1. Driver V_{OD} Test and Current Definitions

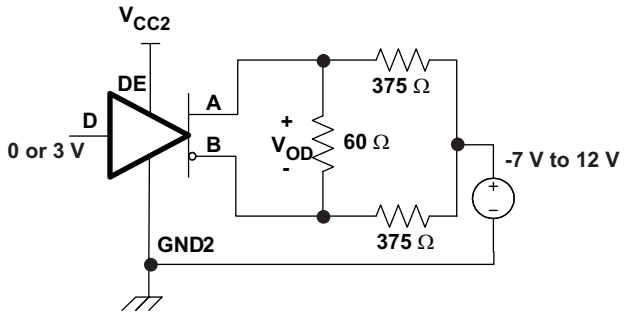

Figure 2. Driver V_{OD} With Common-Mode Loading Test Circuit

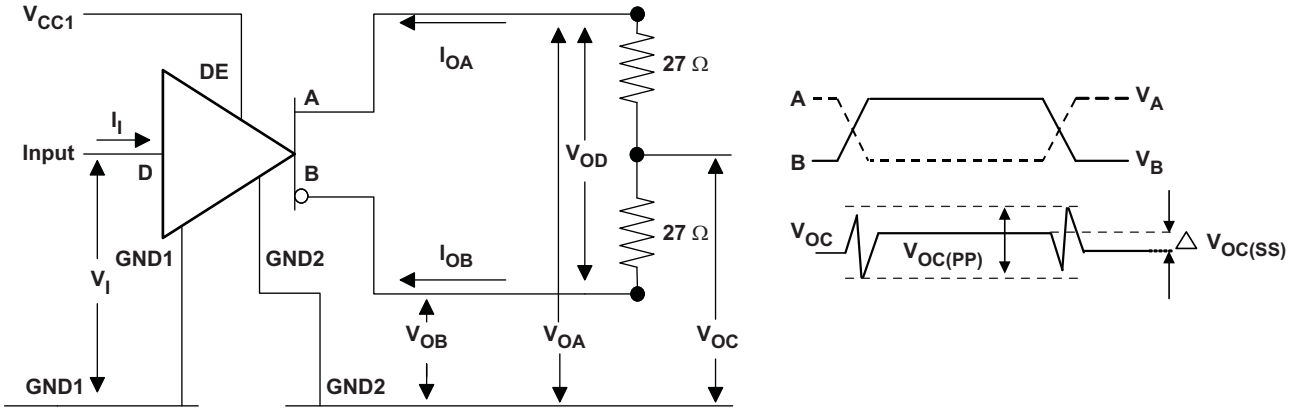

Figure 3. Test Circuit and Waveform Definitions For The Driver Common-Mode Output Voltage

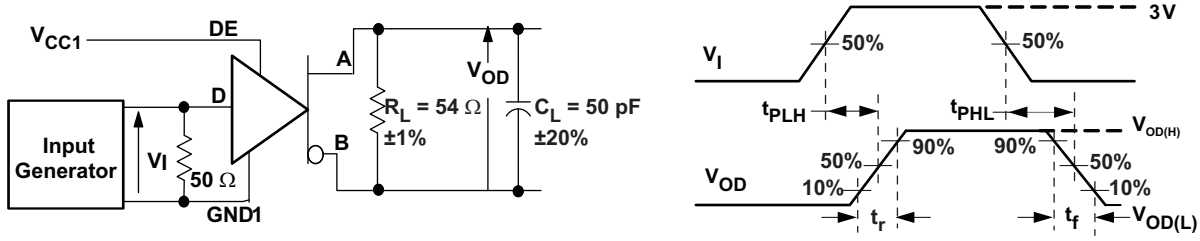

Generator: PRR = 500 kHz, 50% duty cycle, t_r <6ns, t_f <6ns, Z_O = 50 Ω

C_L includes fixture and Instrumentation Capacitance

Figure 4. Driver Switching Test Circuit and Voltage Waveforms

查询"ISO15DW"供应商

PARAMETER MEASUREMENT INFORMATION (continued)

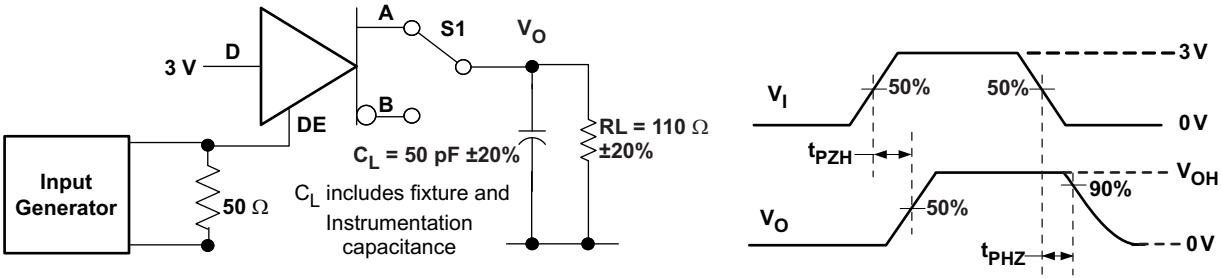

Figure 5. Driver High-Level Output Enable and Disable Time Test Circuit and Voltage Waveforms

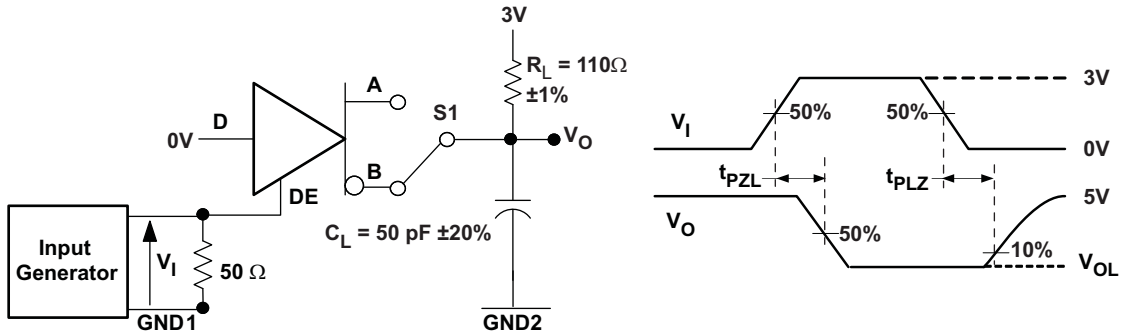

Generator: PRR = 500 kHz, 50% duty cycle, t_r <6ns, t_f <6ns, Z_O = 50Ω

C_L includes fixture and Instrumentation capacitance

Figure 6. Driver Low-Level Output Enable and Disable Time Test Circuit and Voltage Waveform

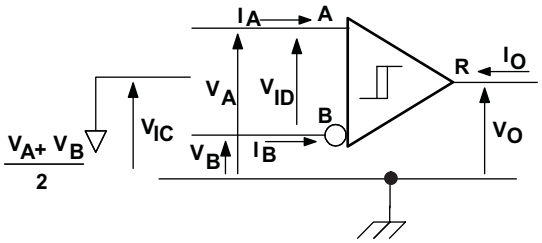

Figure 7. Receiver Voltage and Current Definitions

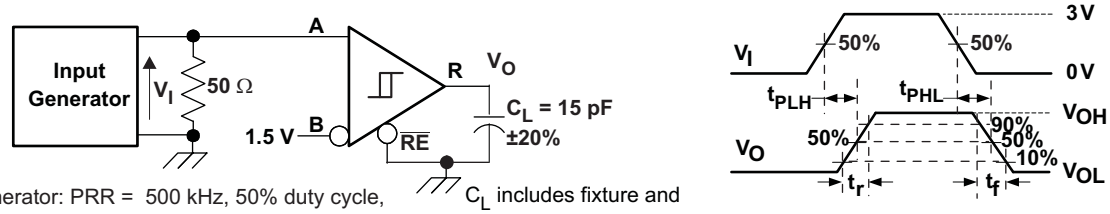

Generator: PRR = 500 kHz, 50% duty cycle, t_r <6ns, t_f <6ns, Z_O = 50 Ω

C_L includes fixture and instrumentation capacitance

Figure 8. Receiver Switching Test Circuit and Waveforms

Copyright © 2008, Texas Instruments Incorporated

查询"ISO15DW"供应商

PARAMETER MEASUREMENT INFORMATION (continued)

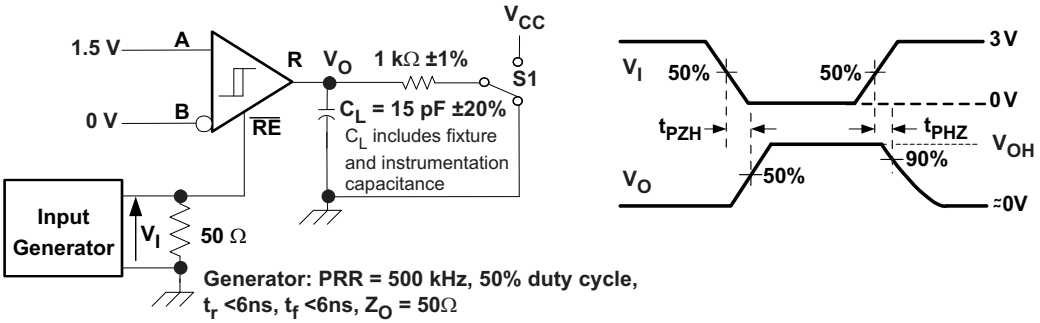

Figure 9. Receiver Enable Test Circuit and Waveforms, Data Output High

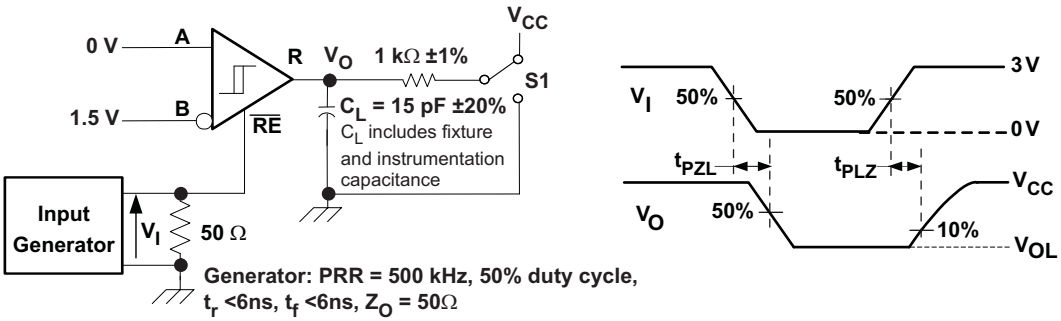

Figure 10. Receiver Enable Test Circuit and Waveforms, Data Output Low

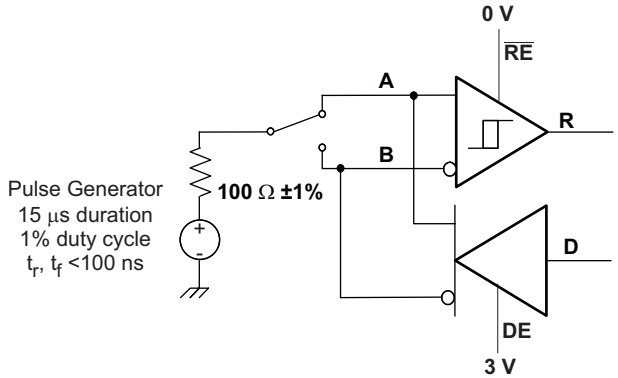

Note: This test is conducted to test survivability only.
Data stability at the R output is not specified.

Figure 11. Transient Over-Voltage Test Circuit

查询"ISO15DW"供应商

PARAMETER MEASUREMENT INFORMATION (continued)

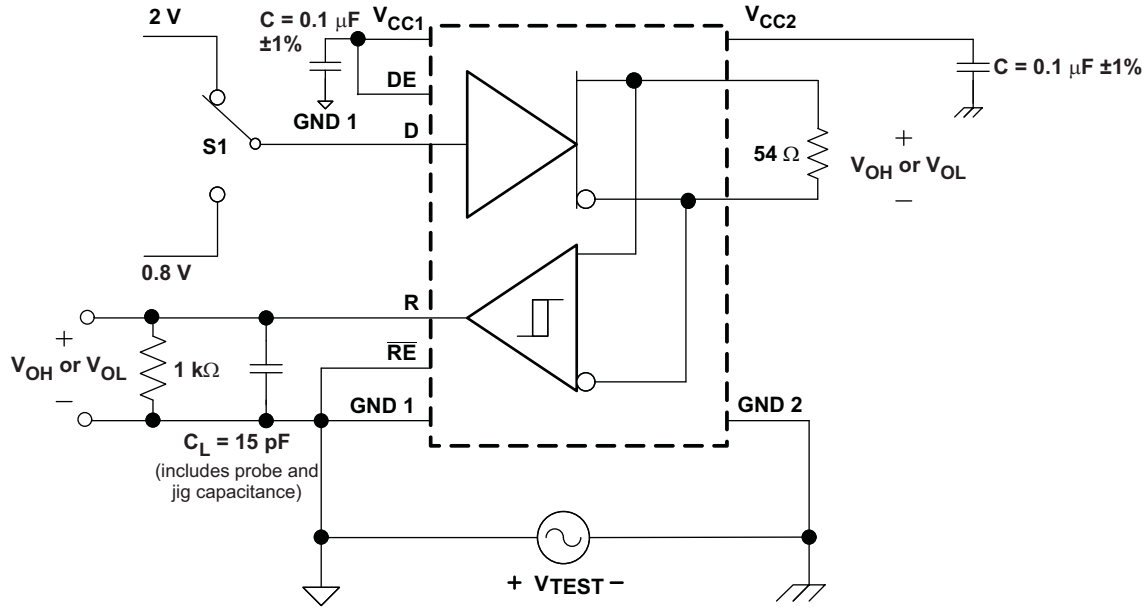

Figure 12. Half-Duplex Common-Mode Transient Immunity Test Circuit

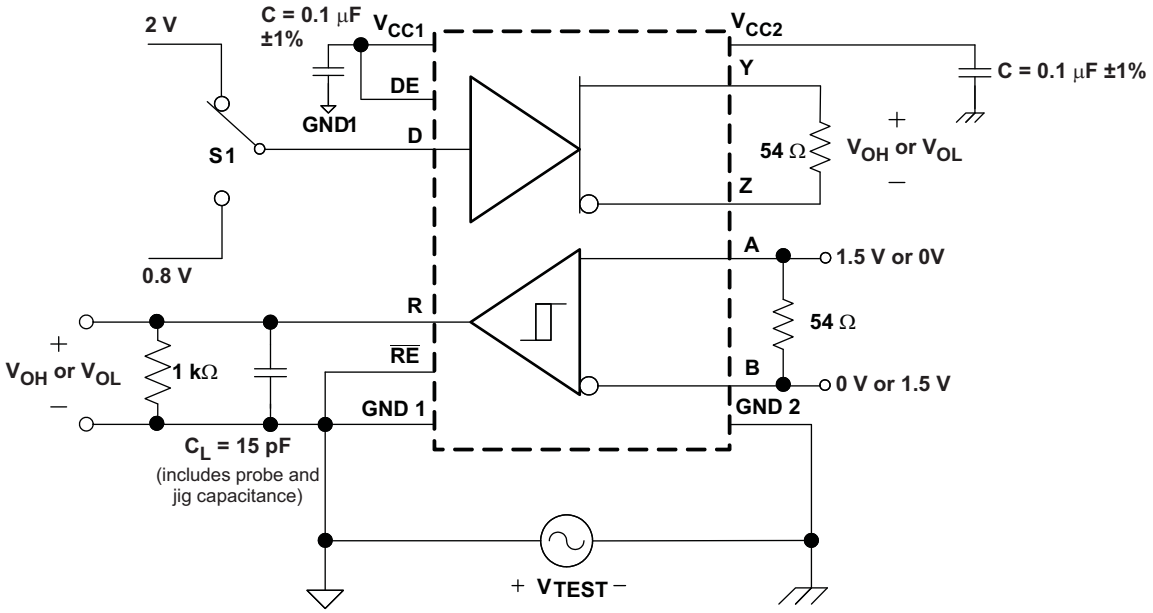

Figure 13. Full-Duplex Common-Mode Transient Immunity Test Circuit

Copyright © 2008, Texas Instruments Incorporated

查询"ISO15DW"供应商

DEVICE INFORMATION

Table 1. Driver Function Table

V_{CC1}	V_{CC2}	INPUT (D)	ENABLE INPUT (DE)	OUTPUTS	
				A or Y	B or Z
PU	PU	H	H	H	L
PU	PU	L	H	L	H
PU	PU	X	L	Z	Z
PU	PU	X	OPEN	Z	Z
PU	PU	OPEN	H	H	L
PD	PU	X	X	Z	Z
PU	PD	X	X	Z	Z
PD	PD	X	X	Z	Z

Table 2. Receiver Function Table

V_{CC1}	V_{CC2}	DIFFERENTIAL INPUT $V_{ID} = (V_A - V_B)$	ENABLE ($\overline{RE}$)	OUTPUT (R)
PU	PU	$-0.01\ V \le V_{ID}$	L	H
PU	PU	$-0.2\ V < V_{ID} < -0.01\ V$	L	?
PU	PU	$V_{ID} \le -0.2\ V$	L	L
PU	PU	X	H	Z
PU	PU	X	OPEN	Z
PU	PU	Open circuit	L	H
PU	PU	Short Circuit	L	H
PU	PU	Idle (terminated) bus	L	H
PD	PU	X	X	Z
PU	PD	X	L	H

PACKAGE CHARACTERISTICS

over recommended operating conditions (unless otherwise noted)

PARAMETER(1)		TEST CONDITIONS	MIN	TYP	MAX	UNIT
L(I01)	Minimum air gap (Clearance)	Shortest terminal to terminal distance through air	8.34			mm
L(I02)	Minimum external tracking (Creepage)	Shortest terminal to terminal distance across the package surface	8.1			mm
CTI	Tracking resistance (Comparative Tracking Index)	DIN IEC 60112 / VDE 0303 Part 1	≥175			V
	Minimum Internal Gap (Internal Clearance)	Distance through the insulation	0.008			mm
R_{IO}	Isolation resistance	Input to output, V_{IO} = 500 V, all pins on each side of the barrier tied together creating a two-terminal device		$>10^{12}$		Ω
C_{IO}	Barrier capacitance Input to output	V_I = 0.4 sin (4E6πt)		2		pF
C_I	Input capacitance to ground	V_I = 0.4 sin (4E6πt)		2		pF

(1) Creepage and clearance requirements should be applied according to the specific equipment isolation standards of an application. Care should be taken to maintain the creepage and clearance distance of a board design to ensure that the mounting pads of the isolator on the printed circuit board do not reduce this distance.
Creepage and clearance on a printed circuit board become equal according to the measurement techniques shown in the Isolation Glossary. Techniques such as inserting grooves and/or ribs on a printed circuit board are used to help increase these specifications.

Copyright © 2008, Texas Instruments Incorporated

查询"ISO15DW"供应商

IEC 60664-1 RATINGS TABLE

PARAMETER	TEST CONDITIONS	SPECIFICATION
Basic isolation group	Material group	IIIa
Installation classification	Rated mains voltage ≤ 150 V_{RMS}	I-IV
	Rated mains voltage ≤ 300 V_{RMS}	I-III
	Rated mains voltage ≤ 400 V_{RMS}	I-II

IEC 60747-5-2 INSULATION CHARACTERISTICS (1)

over recommended operating conditions (unless otherwise noted)

PARAMETER		TEST CONDITIONS	SPECIFICATION	UNIT
V_{IORM}	Maximum working insulation voltage		560	V
V_{PR}	Input to output test voltage	Method b1, $V_{PR} = V_{IORM} \times 1.875$, 100% Production test with t = 1 s, Partial discharge < 5 pC	1050	V
V_{IOTM}	Transient overvoltage	t = 60 s	4000	V
R_S	Insulation resistance	V_{IO} = 500 V at T_S	$>10^9$	Ω
	Pollution degree		2	

(1) Climatic Clasification 40/125/21

REGULATORY INFORMATION

VDE	UL
Certified according to IEC 60747-5-2	Recognized under 1577 Component Recognition Program(1)
File Number: 40016131	File Number: E181974

(1) Production tested ≥3000 VRMS for 1 second in accordance with UL 1577.

Copyright © 2008, Texas Instruments Incorporated

查询"ISO15DW"供应商

IEC SAFETY LIMITING VALUES

Safety limiting intends to prevent potential damage to the isolation barrier upon failure of input or output circuitry. A failure of the IO can allow low resistance to ground or the supply and, without current limiting, dissipate sufficient power to overheat the die and damage the isolation barrier potentially leading to secondary system failures.

PARAMETER		TEST CONDITIONS		MIN	TYP	MAX	UNIT
I_S	Safety input, output, or supply current	DW-16	θ_{JA} = 212°C/W, V_I = 5.5 V, T_J = 170°C, T_A = 25°C			210	mA
T_S	Maximum case temperature	DW-16				150	°C

The safety-limiting constraint is the absolute maximum junction temperature specified in the absolute maximum ratings table. The power dissipation and junction-to-air thermal impedance of the device installed in the application hardware determines the junction temperature. The assumed junction-to-air thermal resistance in the Thermal Characteristics table is that of a device installed in the JESD51-3, Low Effective Thermal Conductivity Test Board for Leaded Surface Mount Packages and is conservative. The power is the recommended maximum input voltage times the current. The junction temperature is then the ambient temperature plus the power times the junction-to-air thermal resistance.

THERMAL CHARACTERISTICS

over recommended operating conditions (unless otherwise noted)

PARAMETER		TEST CONDITIONS	MIN	TYP	MAX	UNIT
θ_{JA}	Junction-to-Air	Low-K Thermal Resistance(1)		168		°C/W
		High-K Thermal Resistance		96.1		
θ_{JB}	Junction-to-Board Thermal Resistance			61		°C/W
θ_{JC}	Junction-to-Case Thermal Resistance			48		°C/W
P_D	Device Power Dissipation	V_{CC1} = V_{CC2} = 5.25 V, T_J = 150°C, C_L = 15 pF, Input a 20 MHz 50% duty cycle square wave			220	mW

(1) Tested in accordance with the Low-K or High-K thermal metric defintions of EIA/JESD51-3 for leaded surface mount packages.

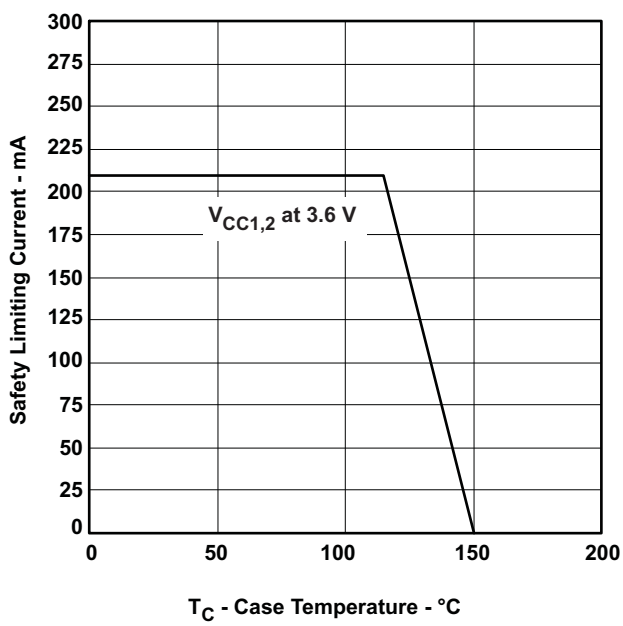

Figure 14. DW-16 θ_{JC} Thermal Derating Curve per IEC 60747-5-2

查询"ISO15DW"供应商

EQUIVALENT CIRCUIT SCHEMATICS

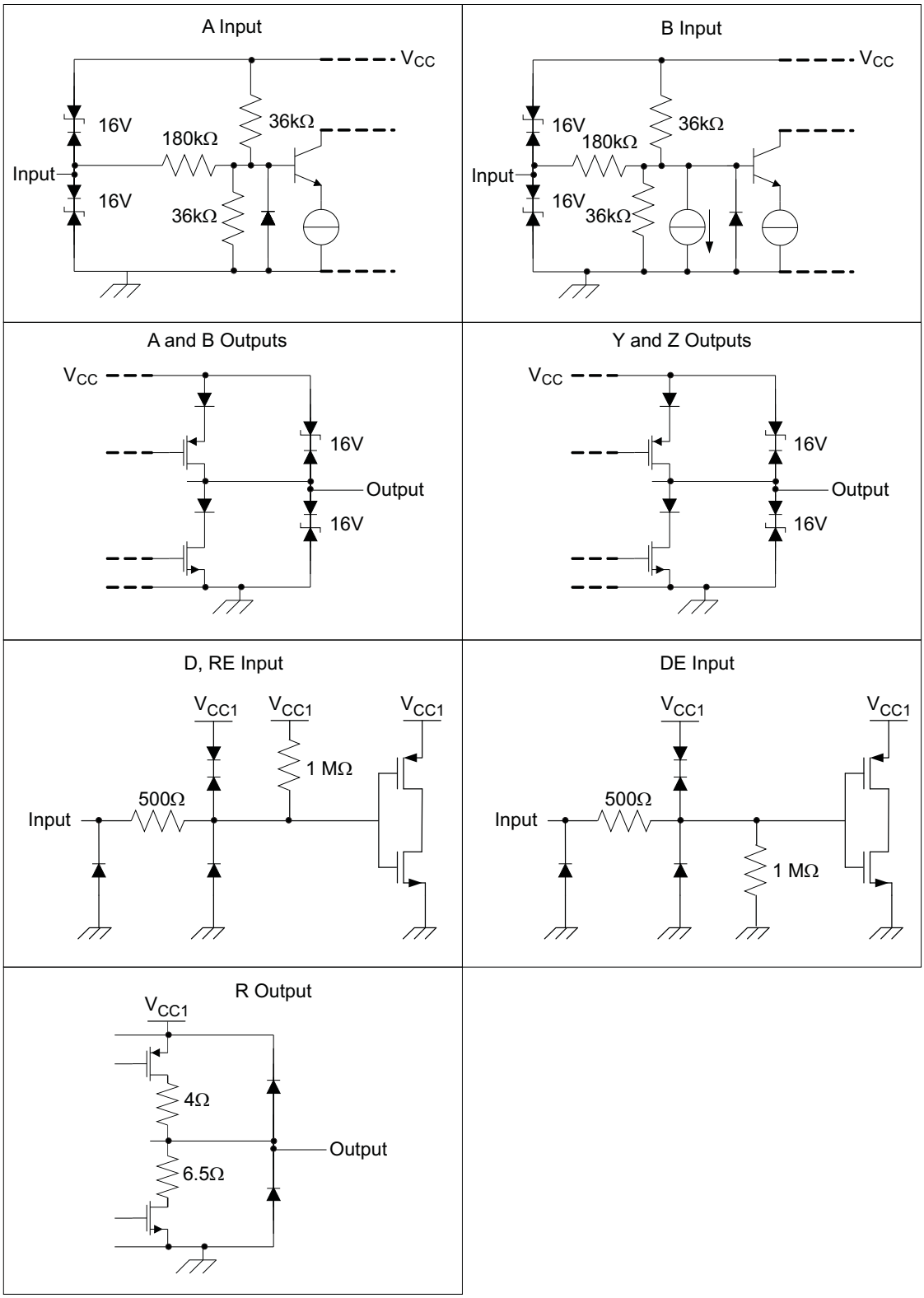

Copyright © 2008, Texas Instruments Incorporated

查询"ISO15DW"供应商

TYPICAL CHARACTERISTICS CURVES

LOW-LEVEL OUTPUT CURRENT
vs
LOW-LEVEL OUTPUT VOLTAGE

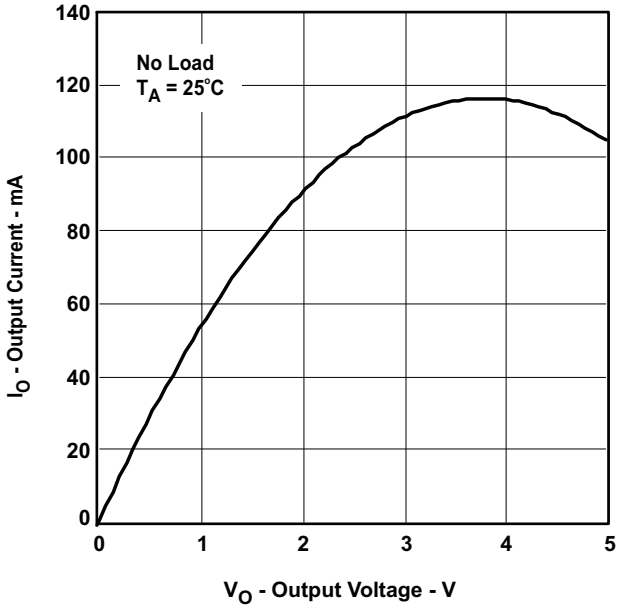

Figure 15.

HIGH-LEVEL OUTPUT CURRENT
vs
HIGH-LEVEL OUTPUT VOLTAGE

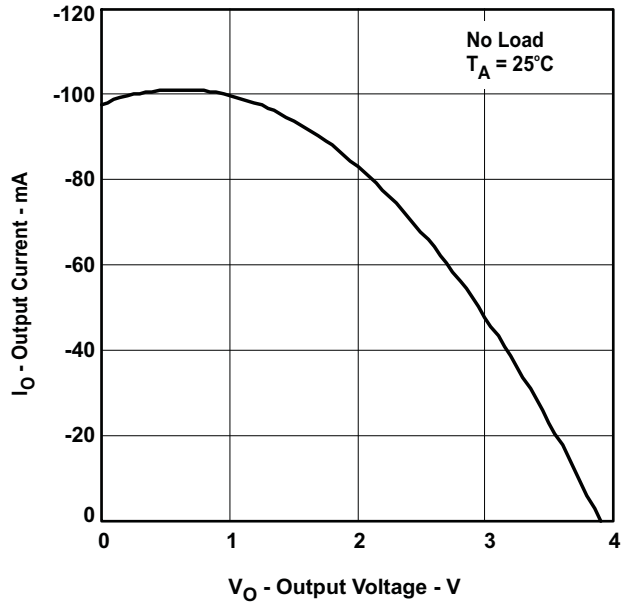

Figure 16.

RMS SUPPLY CURRENT
vs
SIGNALING RATE

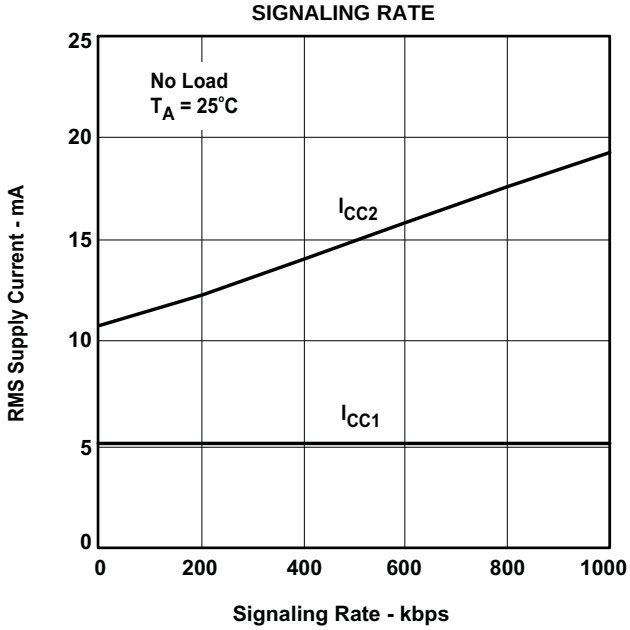

Figure 17.

BUS INPUT CURRENT
vs
INPUT VOLTAGE

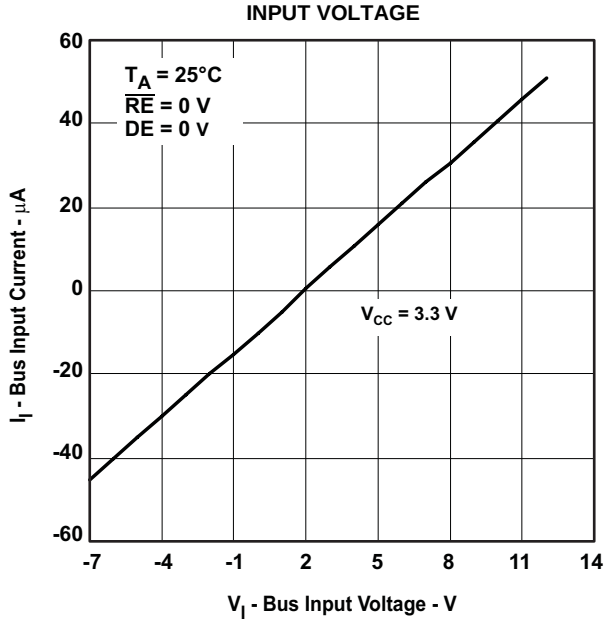

Figure 18.

查询"ISO15DW"供应商

TYPICAL CHARACTERISTICS CURVES (continued)

DRIVER DIFFERENTIAL OUTPUT VOLTAGE vs FREE-AIR TEMPERATURE

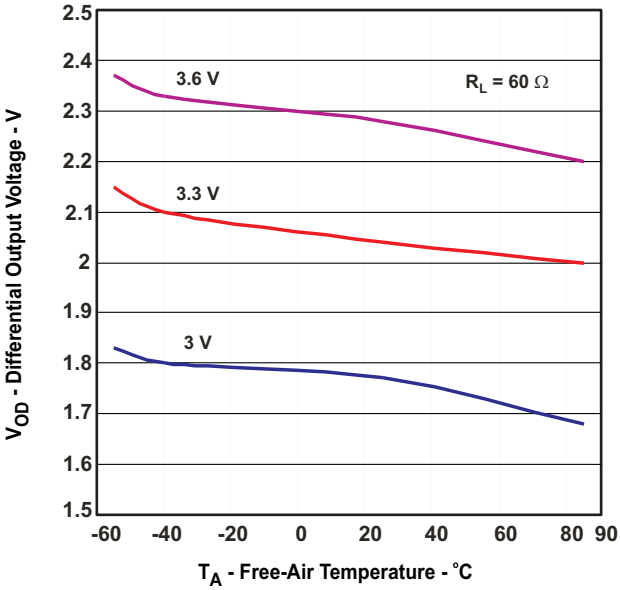

Figure 19.

DRIVER PROPAGATION DELAY vs FREE-AIR TEMPERATURE

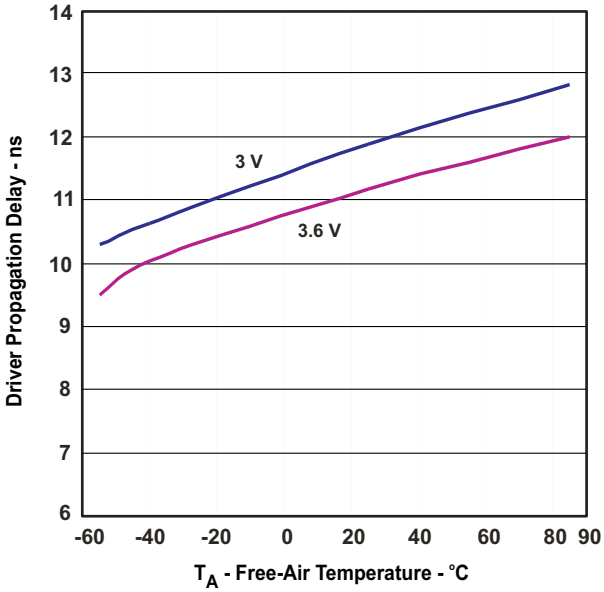

Figure 20.

Copyright © 2008, Texas Instruments Incorporated

查询"ISO15DW"供应商

APPLICATION INFORMATION

Transient Voltages

Isolation of a circuit insulates it from other circuits and earth so that noise develops across the insulation rather than circuit components. The most common noise threat to data-line circuits is voltage surges or electrical fast transients that occur after installation. The transient ratings of the ISO15 and ISO35 are sufficient for all but the most severe installations. However, some equipment manufacturers use their ESD generators to test transient susceptibility of their equipment, and can exceed insulation ratings. ESD generators simulate static discharges that may occur during device or equipment handling with low-energy but high voltage transients.

Figure 21 models the ISO15 and ISO35 bus IO connected to a noise generator. C_{IN} and R_{IN} is capacitance or resistance across the device and any other stray or added capacitance or resistance across the A or B pin to GND2. C_{ISO} and R_{ISO} is the capacitance and resistance between GND1 and GND2 of the ISO15 and ISO35 plus those of any other insulation (transformer, etc.). The stray inductance is assumed to be negligible. From this model, the voltage at the isolated bus return is,

$$V_{GND2} = V_N \frac{Z_{ISO}}{Z_{ISO} + Z_{IN}} \tag{1}$$

and will always be less than 16 V from V_N. If the ISO15 and ISO35 are tested as a stand-alone device, $R_{IN} = 6 \times 10^4 \Omega$, $C_{IN} = 16 \times 10^{-12}$ F, $R_{ISO} = 10^9 \Omega$ and $C_{ISO} = 10^{-12}$ F.

Note from Figure 21 that the resistor ratio determines the voltage ratio at low frequency and it is the inverse capacitance ratio at high frequency. In the stand-alone case and for low frequency,

$$\frac{V_{GND2}}{V_N} = \frac{R_{ISO}}{R_{ISO} + R_{IN}} = \frac{10^9}{10^9 + 6x10^4} \tag{2}$$

or essentially all of noise appears across the barrier. At high frequency,

$$\frac{V_{GND2}}{V_N} = \frac{\frac{1}{C_{ISO}}}{\frac{1}{C_{ISO}} + \frac{1}{C_{IN}}} = \frac{1}{1 + \frac{C_{ISO}}{C_{IN}}} = \frac{1}{1 + \frac{1}{16}} = 0.94 \tag{3}$$

and 94% of V_N appears across the barrier. As long as R_{ISO} is greater than R_{IN} and C_{ISO} is less than C_{IN}, most of transient noise appears across the isolation barrier.

It is not recommend for the user to test equipment transient susceptibility with ESD generators, or consider product claims of ESD ratings above the barrier transient ratings of an isolated interface. ESD is best managed through recessing or covering connector pins in a conductive connector shell and installer training.

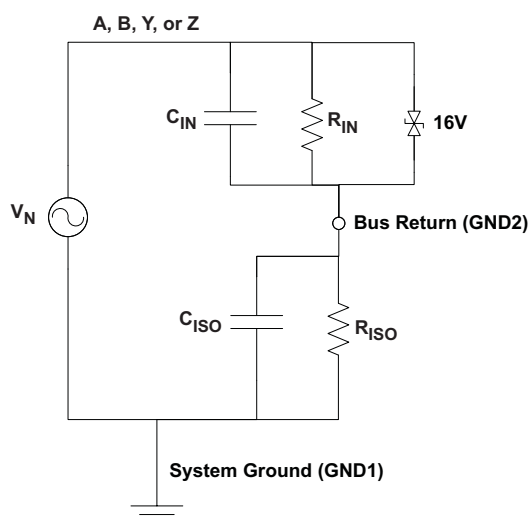

Figure 21. Noise Model

PACKAGING INFORMATION

Orderable Device	Status [1]	Package Type	Package Drawing	Pins	Package Qty	Eco Plan [2]	Lead/Ball Finish	MSL Peak Temp [3]
ISO15DW	ACTIVE	SOIC	DW	16	40	Green (RoHS & no Sb/Br)	CU NIPDAU	Level-2-260C-1 YEAR
ISO15DWG4	ACTIVE	SOIC	DW	16	40	Green (RoHS & no Sb/Br)	CU NIPDAU	Level-2-260C-1 YEAR
ISO15DWR	ACTIVE	SOIC	DW	16	2000	Green (RoHS & no Sb/Br)	CU NIPDAU	Level-2-260C-1 YEAR
ISO15DWRG4	ACTIVE	SOIC	DW	16	2000	Green (RoHS & no Sb/Br)	CU NIPDAU	Level-2-260C-1 YEAR
ISO35DW	ACTIVE	SOIC	DW	16	40	Green (RoHS & no Sb/Br)	CU NIPDAU	Level-2-260C-1 YEAR
ISO35DWG4	ACTIVE	SOIC	DW	16	40	Green (RoHS & no Sb/Br)	CU NIPDAU	Level-2-260C-1 YEAR
ISO35DWR	ACTIVE	SOIC	DW	16	2000	Green (RoHS & no Sb/Br)	CU NIPDAU	Level-2-260C-1 YEAR
ISO35DWRG4	ACTIVE	SOIC	DW	16	2000	Green (RoHS & no Sb/Br)	CU NIPDAU	Level-2-260C-1 YEAR

[1] The marketing status values are defined as follows:
ACTIVE: Product device recommended for new designs.
LIFEBUY: TI has announced that the device will be discontinued, and a lifetime-buy period is in effect.
NRND: Not recommended for new designs. Device is in production to support existing customers, but TI does not recommend using this part in a new design.
PREVIEW: Device has been announced but is not in production. Samples may or may not be available.
OBSOLETE: TI has discontinued the production of the device.

[2] Eco Plan - The planned eco-friendly classification: Pb-Free (RoHS), Pb-Free (RoHS Exempt), or Green (RoHS & no Sb/Br) - please check http://www.ti.com/productcontent for the latest availability information and additional product content details.
TBD: The Pb-Free/Green conversion plan has not been defined.
Pb-Free (RoHS): TI's terms "Lead-Free" or "Pb-Free" mean semiconductor products that are compatible with the current RoHS requirements for all 6 substances, including the requirement that lead not exceed 0.1% by weight in homogeneous materials. Where designed to be soldered at high temperatures, TI Pb-Free products are suitable for use in specified lead-free processes.
Pb-Free (RoHS Exempt): This component has a RoHS exemption for either 1) lead-based flip-chip solder bumps used between the die and package, or 2) lead-based die adhesive used between the die and leadframe. The component is otherwise considered Pb-Free (RoHS compatible) as defined above.
Green (RoHS & no Sb/Br): TI defines "Green" to mean Pb-Free (RoHS compatible), and free of Bromine (Br) and Antimony (Sb) based flame retardants (Br or Sb do not exceed 0.1% by weight in homogeneous material)

[3] MSL, Peak Temp. -- The Moisture Sensitivity Level rating according to the JEDEC industry standard classifications, and peak solder temperature.

Important Information and Disclaimer: The information provided on this page represents TI's knowledge and belief as of the date that it is provided. TI bases its knowledge and belief on information provided by third parties, and makes no representation or warranty as to the accuracy of such information. Efforts are underway to better integrate information from third parties. TI has taken and continues to take reasonable steps to provide representative and accurate information but may not have conducted destructive testing or chemical analysis on incoming materials and chemicals. TI and TI suppliers consider certain information to be proprietary, and thus CAS numbers and other limited information may not be available for release.

In no event shall TI's liability arising out of such information exceed the total purchase price of the TI part(s) at issue in this document sold by TI to Customer on an annual basis.

TAPE AND REEL INFORMATION

REEL DIMENSIONS

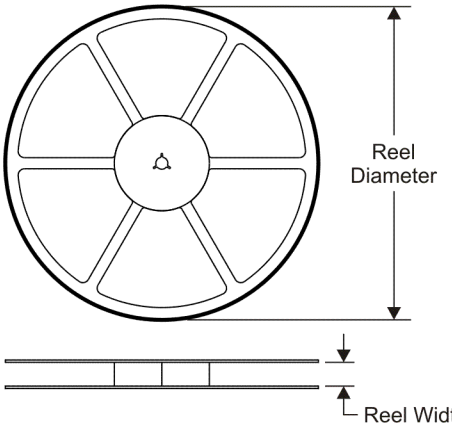

TAPE DIMENSIONS

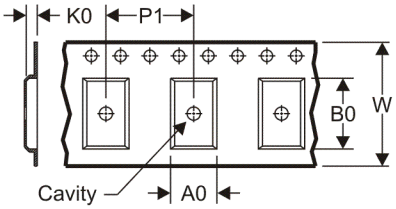

A0	Dimension designed to accommodate the component width
B0	Dimension designed to accommodate the component length
K0	Dimension designed to accommodate the component thickness
W	Overall width of the carrier tape
P1	Pitch between successive cavity centers

QUADRANT ASSIGNMENTS FOR PIN 1 ORIENTATION IN TAPE

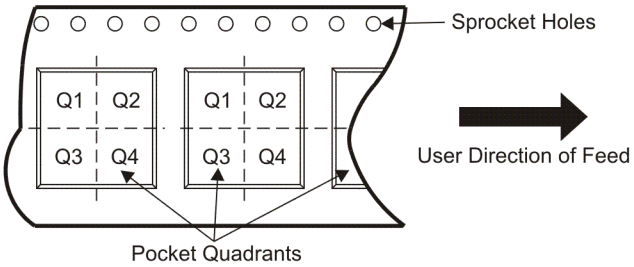

*All dimensions are nominal

Device	Package Type	Package Drawing	Pins	SPQ	Reel Diameter (mm)	Reel Width W1 (mm)	A0 (mm)	B0 (mm)	K0 (mm)	P1 (mm)	W (mm)	Pin1 Quadrant
ISO15DWR	SOIC	DW	16	2000	330.0	16.4	10.9	10.78	3.0	12.0	16.0	Q1
ISO35DWR	SOIC	DW	16	2000	330.0	16.4	10.9	10.78	3.0	12.0	16.0	Q1

TAPE AND REEL BOX DIMENSIONS

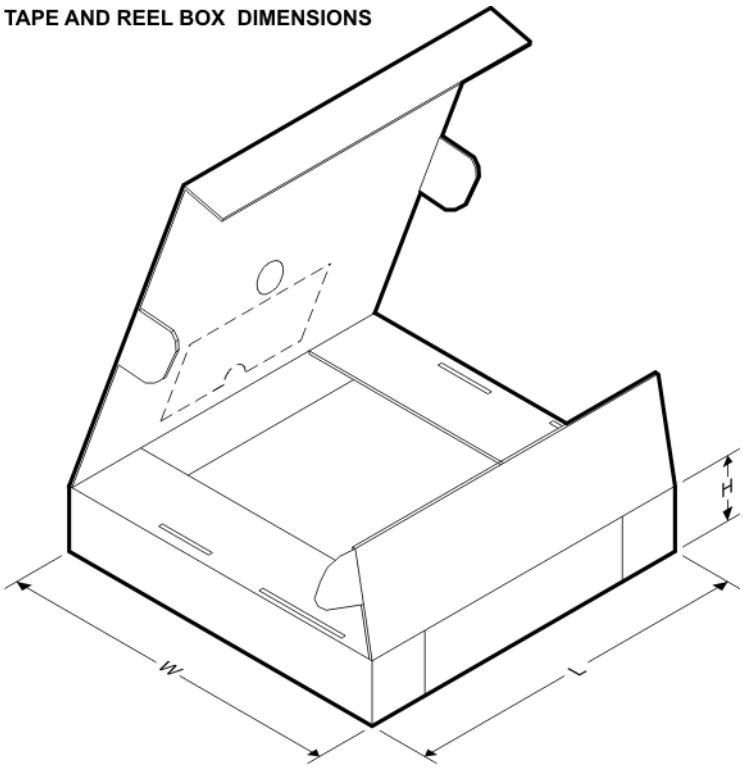

*All dimensions are nominal

Device	Package Type	Package Drawing	Pins	SPQ	Length (mm)	Width (mm)	Height (mm)
ISO15DWR	SOIC	DW	16	2000	358.0	335.0	35.0
ISO35DWR	SOIC	DW	16	2000	358.0	335.0	35.0

查询"ISO15DW"供应商

DW (R–PDSO–G16) PLASTIC SMALL–OUTLINE PACKAGE

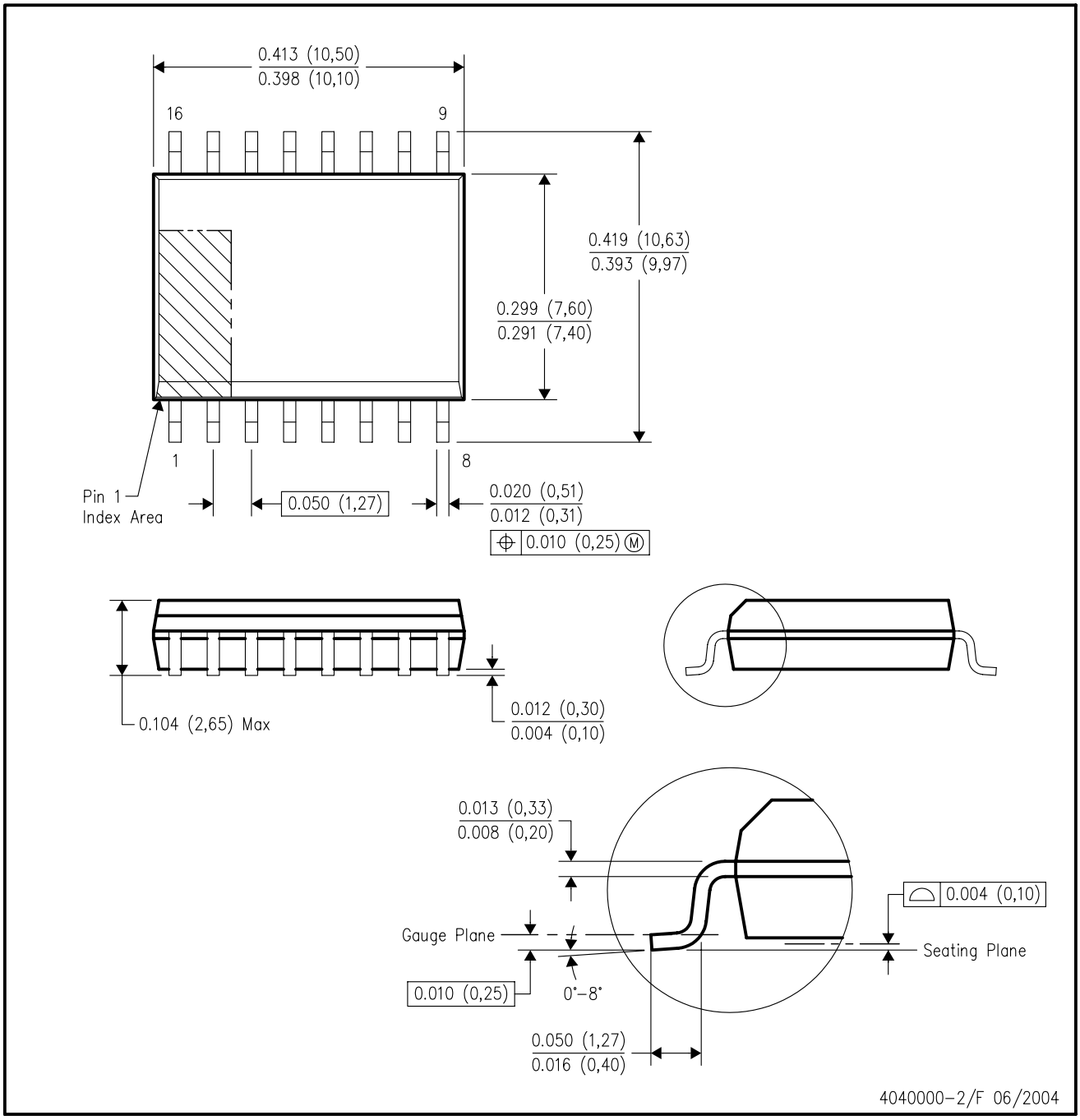

NOTES:
A. All linear dimensions are in inches (millimeters).
B. This drawing is subject to change without notice.
C. Body dimensions do not include mold flash or protrusion not to exceed 0.006 (0,15).
D. Falls within JEDEC MS–013 variation AA.

查询"ISO15DW"供应商

IMPORTANT NOTICE

Texas Instruments Incorporated and its subsidiaries (TI) reserve the right to make corrections, modifications, enhancements, improvements, and other changes to its products and services at any time and to discontinue any product or service without notice. Customers should obtain the latest relevant information before placing orders and should verify that such information is current and complete. All products are sold subject to TI's terms and conditions of sale supplied at the time of order acknowledgment.

TI warrants performance of its hardware products to the specifications applicable at the time of sale in accordance with TI's standard warranty. Testing and other quality control techniques are used to the extent TI deems necessary to support this warranty. Except where mandated by government requirements, testing of all parameters of each product is not necessarily performed.

TI assumes no liability for applications assistance or customer product design. Customers are responsible for their products and applications using TI components. To minimize the risks associated with customer products and applications, customers should provide adequate design and operating safeguards.

TI does not warrant or represent that any license, either express or implied, is granted under any TI patent right, copyright, mask work right, or other TI intellectual property right relating to any combination, machine, or process in which TI products or services are used. Information published by TI regarding third-party products or services does not constitute a license from TI to use such products or services or a warranty or endorsement thereof. Use of such information may require a license from a third party under the patents or other intellectual property of the third party, or a license from TI under the patents or other intellectual property of TI.

Reproduction of TI information in TI data books or data sheets is permissible only if reproduction is without alteration and is accompanied by all associated warranties, conditions, limitations, and notices. Reproduction of this information with alteration is an unfair and deceptive business practice. TI is not responsible or liable for such altered documentation. Information of third parties may be subject to additional restrictions.

Resale of TI products or services with statements different from or beyond the parameters stated by TI for that product or service voids all express and any implied warranties for the associated TI product or service and is an unfair and deceptive business practice. TI is not responsible or liable for any such statements.

TI products are not authorized for use in safety-critical applications (such as life support) where a failure of the TI product would reasonably be expected to cause severe personal injury or death, unless officers of the parties have executed an agreement specifically governing such use. Buyers represent that they have all necessary expertise in the safety and regulatory ramifications of their applications, and acknowledge and agree that they are solely responsible for all legal, regulatory and safety-related requirements concerning their products and any use of TI products in such safety-critical applications, notwithstanding any applications-related information or support that may be provided by TI. Further, Buyers must fully indemnify TI and its representatives against any damages arising out of the use of TI products in such safety-critical applications.

TI products are neither designed nor intended for use in military/aerospace applications or environments unless the TI products are specifically designated by TI as military-grade or "enhanced plastic." Only products designated by TI as military-grade meet military specifications. Buyers acknowledge and agree that any such use of TI products which TI has not designated as military-grade is solely at the Buyer's risk, and that they are solely responsible for compliance with all legal and regulatory requirements in connection with such use.

TI products are neither designed nor intended for use in automotive applications or environments unless the specific TI products are designated by TI as compliant with ISO/TS 16949 requirements. Buyers acknowledge and agree that, if they use any non-designated products in automotive applications, TI will not be responsible for any failure to meet such requirements.

Following are URLs where you can obtain information on other Texas Instruments products and application solutions:

Products		**Applications**	
Amplifiers	amplifier.ti.com	Audio	www.ti.com/audio
Data Converters	dataconverter.ti.com	Automotive	www.ti.com/automotive
DSP	dsp.ti.com	Broadband	www.ti.com/broadband
Clocks and Timers	www.ti.com/clocks	Digital Control	www.ti.com/digitalcontrol
Interface	interface.ti.com	Medical	www.ti.com/medical
Logic	logic.ti.com	Military	www.ti.com/military
Power Mgmt	power.ti.com	Optical Networking	www.ti.com/opticalnetwork
Microcontrollers	microcontroller.ti.com	Security	www.ti.com/security
RFID	www.ti-rfid.com	Telephony	www.ti.com/telephony
RF/IF and ZigBee® Solutions	www.ti.com/lprf	Video & Imaging	www.ti.com/video
		Wireless	www.ti.com/wireless

Mailing Address: Texas Instruments, Post Office Box 655303, Dallas, Texas 75265
Copyright © 2008, Texas Instruments Incorporated