DRAWING MADE IN THIRD ANGLE PROJECTION

THIS DRAWING IS UNPUBLISHED. RELEASED FOR PUBLICATION ,19 .
查询"111506"供应商
© COPYRIGHT 19 BY AMP INCORPORATED. ALL INTERNATIONAL RIGHTS RESERVED.

LOC	DIST
AR	35

REVISIONS

P	F	ZONE	LTR	DESCRIPTION	DATE	APPD
			O	RLSE PER NPR 3030 WAS 90-5131-19	8-10-90	–
			A	REV PER ECN BD4933	4-19-91	FMH
			B	REV PER EC 0020-53-94	05/02/94	DK
			C	REV PER EC 0020-1023-95	21 SEP 95	KD

1. FLAME RETARDANT 94V-0 RATED THERMOPLASTIC; BLACK.
2. 2.54µm [.000100] MIN BRIGHT TIN-LEAD ON TERMINATION END, 0.76µm [.000030] MIN GOLD ON CONTACT AREA, ALL OVER 1.27µm [.000050] MIN NICKEL.
3. NO SLOT ON THIS END FOR 10 AND 14 POSITION HOUSINGS.
4. NO SLOT FOR SNAP-IN POLARIZER ON THIS END FOR 10 AND 14 POSITION HOUSINGS.
5. FOR MILITARY POLARIZATION, ORDER SNAP-IN POLARIZER 499991-2 (BULK PACK OF 50).
6. POSITION NO 1 INDICATOR.
7. COORDINATE DIMENSION APPLIES FROM CENTER OF ACTUAL FEATURE.
8. PHOSPHOR BRONZE PER QQ-B-750.

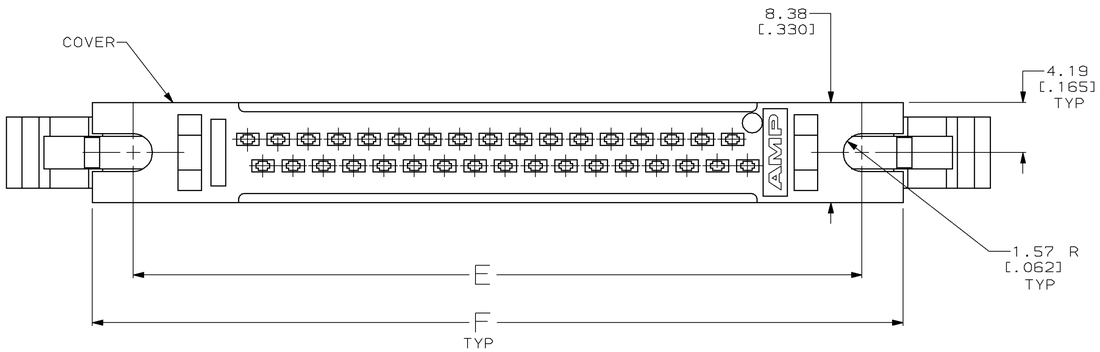

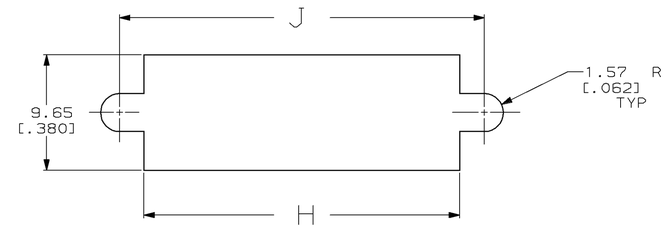

PANEL CUT-OUT

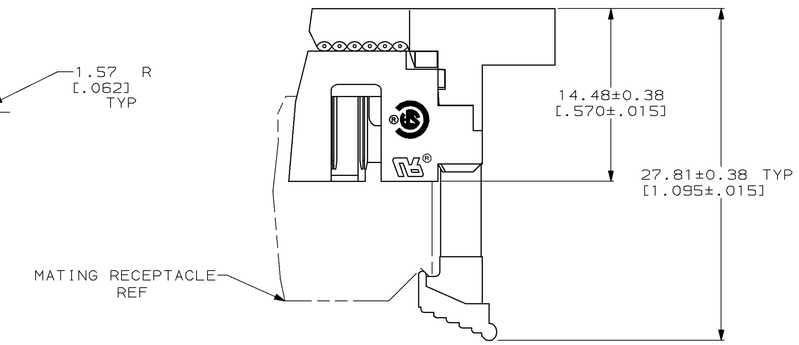

TERMINATED ASSEMBLY
(ASSEMBLED BY CUSTOMER)

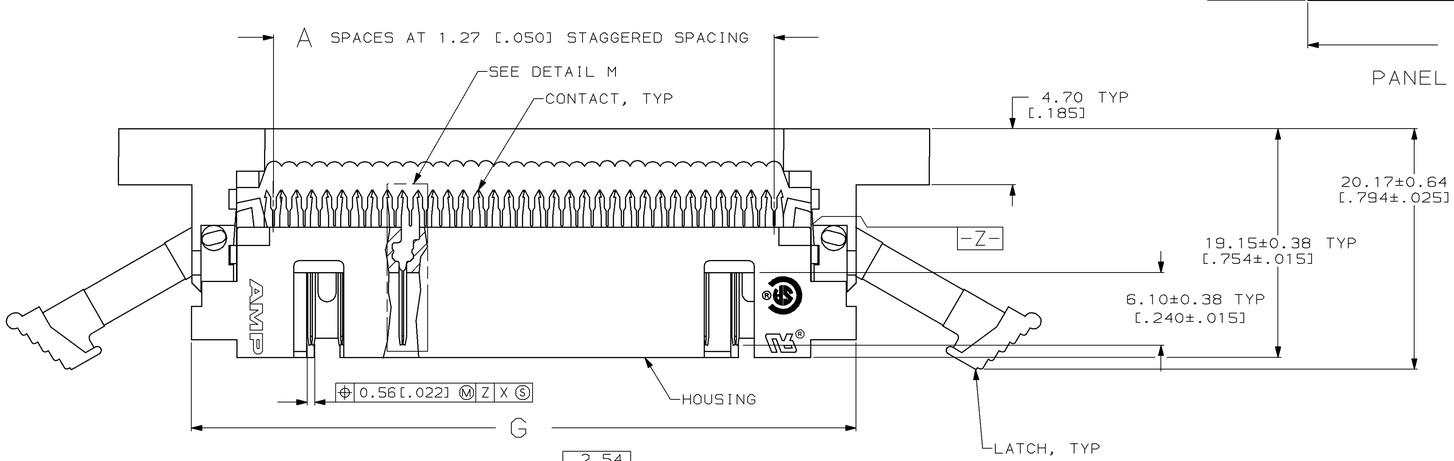

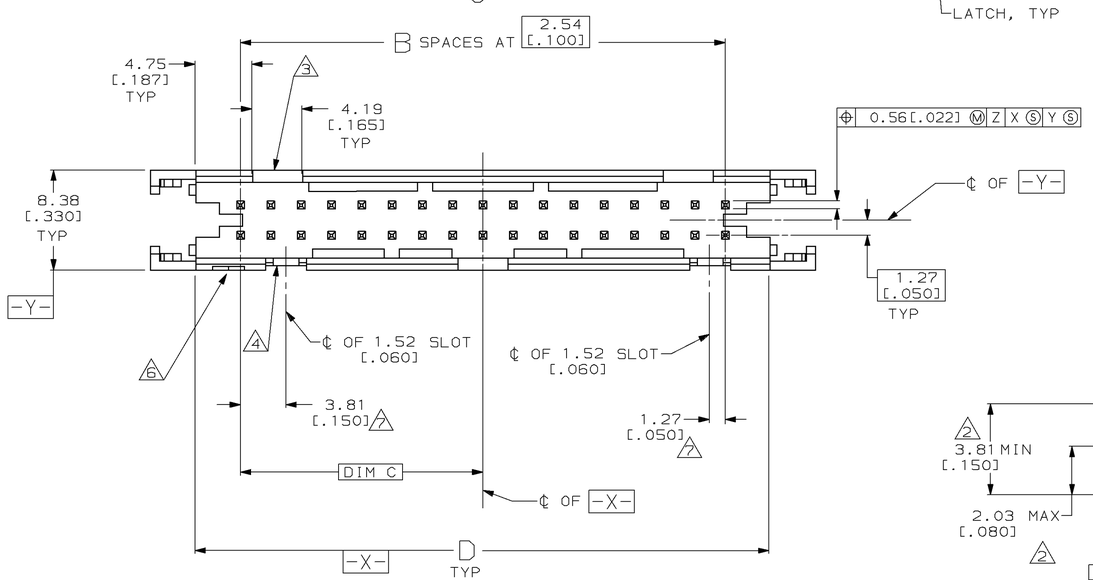

COVER AND LATCH NOT SHOWN
IN THIS VIEW
FOR CLARITY

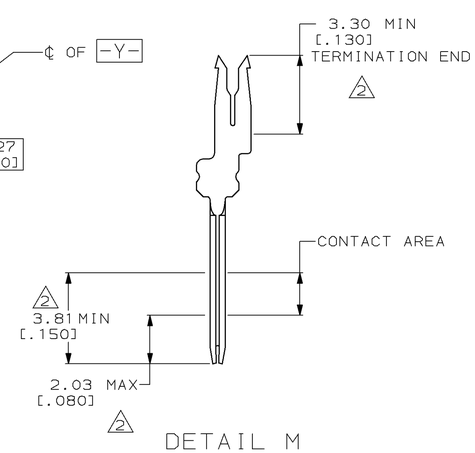

DETAIL M
SCALE 8:1
TYPICAL

J	H	G	F	E	D	C	B	A	NO OF POSN	PART NUMBER
99.16 [3.904]	95.05 [3.742]	93.78 [3.692]	106.07 [4.176]	99.16 [3.904]	86.21 [3.394]	39.37 [1.550]	31	63	64	1-111506-3
94.08 [3.704]	89.97 [3.542]	88.70 [3.492]	100.99 [3.976]	94.08 [3.704]	81.13 [3.194]	36.83 [1.450]	29	59	60	1-111506-2
81.38 [3.204]	77.27 [3.042]	68.38 [2.992]	88.29 [3.476]	81.38 [3.204]	68.43 [2.694]	30.48 [1.200]	24	49	50	1-111506-1
73.76 [2.904]	69.65 [2.742]	68.38 [2.692]	80.67 [3.176]	73.76 [2.904]	60.81 [2.394]	26.67 [1.050]	21	43	44	1-111506-0
68.68 [2.704]	64.57 2.542	63.30 [2.492]	75.59 [2.976]	68.68 [2.704]	55.73 [2.194]	24.13 [.950]	19	39	40	111506-9
61.06 [2.404]	56.95 [2.242]	55.68 [2.192]	67.97 [2.676]	61.06 [2.404]	48.11 [1.894]	20.32 [.800]	16	33	34	111506-8
55.98 [2.204]	51.87 [2.042]	50.60 [1.992]	62.89 [2.476]	55.98 [2.204]	43.03 [1.694]	17.78 [.700]	14	29	30	111506-7
50.90 [2.004]	46.79 [1.842]	45.52 [1.792]	57.81 [2.276]	50.90 [2.004]	37.95 [1.494]	15.24 [.600]	12	25	26	111506-6
48.36 [1.904]	44.25 [1.742]	42.98 [1.692]	55.27 [2.176]	48.36 [1.904]	35.41 [1.394]	13.97 [.550]	11	23	24	111506-5
43.28 [1.704]	39.17 [1.542]	37.90 [1.492]	50.19 [1.976]	43.28 [1.704]	30.33 [1.194]	11.43 [.450]	9	19	20	111506-4
38.20 [1.504]	34.09 [1.342]	32.82 [1.292]	45.11 [1.776]	38.20 [1.504]	25.25 [.994]	8.89 [.350]	7	15	16	111506-3
35.66 [1.404]	31.55 [1.242]	30.28 [1.192]	42.57 [1.676]	35.66 [1.404]	22.71 [.894]	7.62 [.300]	6	13	14	111506-2
30.58 [1.204]	26.47 [1.042]	25.20 [.992]	37.49 [1.476]	30.58 [1.204]	17.63 [.694]	5.08 [.200]	4	9	10	111506-1

PART NO

DO NOT SCALE PRINT.
UNLESS SPECIFIED
DIMENSIONS IN mm [INCHES]
TOLERANCES ON :
2 PLC DEC ± 0.13[.005]
3 PLC DEC ± –
ANGLES ± –

MATERIAL
MOLDED PARTS: 1
CONTACTS: 8

FINISH
CONTACTS: 2

DR 8-10-90 C.OBERMAN
CHK 11-28-90 F M HEINEY
APPD 11-29-90 F M HEINEY
APPD 11-30-90 D HOFFMAN

PRODUCT SPEC
108-1336

APPLICATION SPEC
114-7011

WEIGHT –

AMP INCORPORATED
Harrisburg, Pa. 17105

NAME
UNIVERSAL I/O PIN CONNECTOR,
WITH SLOTTED MOUNTING EARS, WITH
STRAIN RELIEF LATCHES, AMP-LATCH™

SIZE	CAGE CODE	DRAWING NO
D	00779	111506
SCALE 4:1		SHEET 1 OF 1

CUSTOMER DRAWING