查询"VENUS"供应商

Data Sheet March 24, 2008

Get Full Datasheet

System on a Chip, Dual Channel 133 MHz Pin Electronics Solution

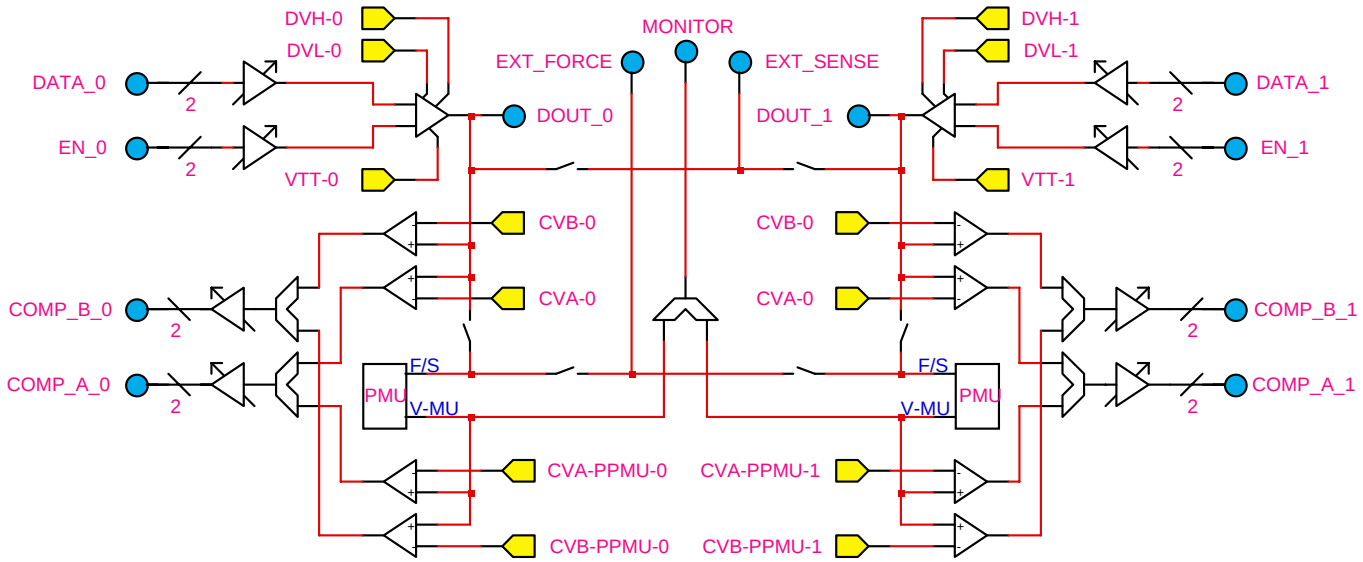

133 MHz
3.75 ns Minimum Pulse Width

Pin Electronics Driver / Comparator
- 3 Level Driver
- 8V Driver Output Swings
- 16V Comparator Input Voltage Range
- Extremely Low HiZ Leakage over 16V

Per Pin PMU
- FV, FI, MV, MI
- 8 Current Ranges
  (32 mA, 8 mA, 2 mA, 512 µA, 128 µA, 32 µA, 8 µA, 2 µA)
- 12V Super Voltage Capability
- Resistive Load (6 selectable resistor values, 2 mA Imax)

Deskew
- Propagation Delay Adjustment (up to 12.8 ns range)
- Falling Edge Adjustment (up to ±3.2 ns range)
- Auto Calibration via PLL

On Chip DC Levels
- 11 Levels / Pin
- Gain and Offset / Level
- DUT Ground Sensing / Pin

3 Bit Serial CPU Port
- Load Internal Registers and Memory
- Read Back Internal States

Flexible Digital Inputs and Outputs
- Selectable on chip terminations for high speed inputs
- 50Ω series terminated high speed comparator outputs

Package / Power Dissipation
- 64 Lead, 10 mm X 10 mm, TQFP w/ Heat Slug
- Pdq ≤ 1.0W / Channel; Pdq ≤ 2.0W / Chip

Data Sheet Status	Revision Date
Production	11 / 21 / 07

1-888-INTERSIL or 1-888-468-3774 | Intersil (and design) is a registered trademark of Intersil Americas Inc.
Copyright © Intersil Americas Inc. 2008. All Rights Reserved
All other trademarks mentioned are the property of their respective owners