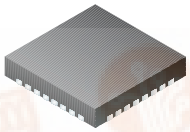

16-Bit, Low-Power Stereo Audio CODEC With Microphone Bias, Headphone, and Digital Speaker Amplifier

FEATURES

- **Analog Front End:**
  - **Stereo Single-Ended Input With Multiplexer**
  - **Mono Differential Input**
  - **Stereo Programmable Gain Amplifier**
  - **Microphone Boost Amplifier (20 dB) and Bias**
- **Analog BackEnd:**
  - **Stereo/Mono Line Output With Volume**
  - **Stereo/Mono Headphone Amplifier With Volume and Capless Mode**
  - **Stereo/Mono Digital Speaker Amplifier (BTL) With Volume (PCM3793)**
- **Analog Performance:**
  - **Dynamic Range: 93 dB (DAC)**
  - **Dynamic Range: 90 dB (ADC)**
  - **40-mW + 40-mW Headphone Output at R_L = 16 Ω**
  - **700-mW + 700-mW Speaker Output at R_L = 8 Ω**
- **Power Supply Voltage**
  - **1.71 V to 3.6 V for Digital I/O Section**
  - **1.71 V to 3.6 V for Digital Core Section**
  - **2.4 V to 3.6 V for Analog Section**
  - **2.4 V to 3.6 V for Power Amplifier Section**
- **Low Power Dissipation:**
  - **7 mW in Playback, 1.8 V/2.4 V, 48 kHz**
  - **13 mW in Record, 1.8 V/2.4 V, 48 kHz**
  - **30 μW in Power Down**
- **Sampling Frequency: 5 kHz to 50 kHz**
- **Automatic Level Control for Recording**
- **Operation From a Single Clock Input Without PLL**
- **System Clock:**
  - **Common-Audio Clock (256 f_S/384 f_S), 12/24, 13/26, 13.5/27, 19.2/38.4, 19.68/39.36 MHz**
- **Headphone Plug Insert Detection**
- **2 (I^2C) or 3 (SPI) Wire Serial Control**
- **Programmable Function by Register Control:**
  - **Digital Attenuation of DAC: 0 dB to –62 dB**
  - **Power Up/Down Control for Each Module**
  - **6-dB to –70-dB Gain for Analog Outputs**
  - **30-dB to –12-dB Gain for Analog Inputs**
  - **0/20 dB Boost Selectable for Microphone Input**
  - **0-dB to –21-dB Gain for Analog Mixing**
  - **Parameter Settings for ALC**
  - **Three-Band Tone Control and 3D Sound**
  - **High-Pass Filter and Two-Stage Notch Filter**
  - **Analog Mixing**
- **Pop-Noise Reduction Circuit**
- **Short and Thermal Protection Circuit**
- **Package: 5-mm × 5-mm QFN Pacakge**
- **Operation Temperature Range: –40°C to 85°C**

APPLICATIONS

- **Portable Audio Player, Cellular Phone**
- **Video Camcorder, Digital Still Camera**
- **PMP/DMB**

DESCRIPTION

The PCM3793/94 is a low-power stereo CODEC designed for portable digital audio applications. The device integrates stereo digital speaker amplifier, headphone amplifier, line amplifier, line input, boost amplifier, microphone bias, programmable gain control, analog mixing, sound effects, and automatic level control (ALC). It is available in a small-footprint, 5-mm × 5-mm QFN package. The PCM3793/94 accepts right-justified, left-justified, I^2S, and DSP formats, providing easy interfacing to audio DSP, decoder, and encoder chips. Sampling rates up to 50 kHz are supported. The user-programmable functions are accessible through a two- or three-wire serial control port.

This integrated circuit can be damaged by ESD. Texas Instruments recommends that all integrated circuits be handled with appropriate precautions. Failure to observe proper handling and installation procedures can cause damage.

ESD damage can range from subtle performance degradation to complete device failure. Precision integrated circuits may be more susceptible to damage because very small parametric changes could cause the device not to meet its published specifications.

ORDERING INFORMATION

PRODUCT	PACKAGE	PACKAGE CODE	OPERATION TEMPERATURE RANGE	PACKAGE MARKING	ORDERING NUMBER(1)	TRANSPORT MEDIA
PCM3793RHB	32 QFN	RHB	–40°C to 85°C	PCM3793	PCM3793RHBT	Small tape and reel
					PCM3793RHBR	Large tape and reel
PCM3794RHB	32 QFN	RHB	–40°C to 85°C	PCM3794	PCM3794RHBT	Small tape and reel
					PCM3794RHBR	Large tape and reel

(1) For the most current specification and package information, see the TI Web site at www.ti.com.

ABSOLUTE MAXIMUM RATINGS

over operating free-air temperature range (unless otherwise noted)(1)

		PCM3793/94	UNIT
Supply voltage	V_{DD}, V_{IO}, V_{CC}, V_{PA}	–0.3 to 4	V
Ground voltage differences: DGND, AGND, PGND		±0.1	V
Input voltage		–0.3 to 4	V
Input current (any pins except supplies and SPK out)		±10	mA
Ambient temperature under bias		–40 to 110	°C
Storage temperature		–55 to 150	°C
Junction temperature		150	°C
Lead temperature (soldering)		260	°C, 5 s
Package temperature (reflow, peak)		260	°C

(1) Stresses beyond those listed under *absolute maximum ratings* may cause permanent damage to the device. These are stress ratings only, and functional operation of the device at these or any other conditions beyond those indicated under *recommended operating conditions* is not implied. Exposure to absolute–maximum–rated conditions for extended periods may affect device reliability.

RECOMMENDED OPERATING CONDITIONS

over operating free-air temperature range (unless otherwise noted)

			MIN	NOM	MAX	UNIT
V_{CC}, V_{PA}	Analog supply voltage		2.4	3.3	3.6	V
V_{DD} , V_{IO}	Digital supply voltage		1.71	3.3	3.6	V
	Digital input logic family			CMOS		
	Digital input clock frequency	SCKI system clock	3.072		18.432	MHz
		LRCK sampling clock	8		48	kHz
	Analog output load resistance	LOL and LOR	10			kΩ
		HPOL and HPOR	16			Ω
		SPOLP, SPOLN, SPORP and SPORN	8			Ω
	Analog output load capacitance				30	pF
	Digital output load capacitance				10	pF
T_A	Operating free-air temperature		–40		85	°C

ELECTRICAL CHARACTERISTICS

All specifications at T_A = 25°C, V_{DD} = V_{IO} = V_{CC} = V_{PA} = 3.3 V, f_S = 48 kHz, system clock = 256 f_S, and 16-bit data (unless otherwise noted).

PARAMETER		TEST CONDITIONS	PCM3793RHB, PCM3794RHB			UNIT
			MIN	TYP	MAX	
Audio Data Characteristics						
DATA FORMAT						
	Resolution			16		Bits
	Audio data interface format			I^2S, left-, right-justified, DSP		
	Audio data bit length			16		Bits
	Audio data format			MSB first, 2s complement		
	Sampling frequency (f_S)		5		50	kHz
	System clock	V_{DD} < 2 V			27	MHz
		V_{DD} > 2 V			40	
Digital Input/Output						
	Logic family			CMOS compatible		
V_{IH}	Input logic level		0.7 V_{IO}			VDC
V_{IL}					0.3 V_{IO}	VDC
I_{IH}	Input logic current	V_{IN} = 3.3 V			10	µA
I_{IL}		V_{IN} = 0 V			–10	
V_{OH}	Output logic level	I_{OH} = –2 mA	0.75 V_{IO}			VDC
V_{OL}		I_{OL} = 2 mA			0.25 V_{IO}	VDC
Digital Input to Line Output Through DAC (LOL, LOR, and MONO) R_L = 10 kΩ, ALC = OFF, volume = 0 dB, speaker = powered down, analog mixing = disabled						
DYNAMIC PERFORMANCE						
	Full-scale output voltage	0 dB		2.828		Vp-p
				1		Vrms
	Dynamic range	EIAJ, A-weighted		93		dB
SNR	Signal-to-noise ratio	EIAJ, A-weighted	86	93		dB
	Channel separation			91		dB
THD+N	Total harmonic distortion + noise	0 dB		0.008%		
	Load resistance		10			kΩ
Line Input to Line Output Through Mixing Path (LOL, LOR, and MONO) R_L = 10 kΩ, ALC = OFF, volume = 0 dB, speaker = powered down, analog mixing = enabled						
DYNAMIC PERFORMANCE						
	Full-scale input and output voltage	0 dB		2.828		Vp-p
				1		Vrms
SNR	Signal-to-noise ratio	EIAJ, A-weighted	84	93		dB

ELECTRICAL CHARACTERISTICS (continued)

All specifications at T_A = 25°C, V_{DD} = V_{IO} = V_{CC} = V_{PA} = 3.3 V, f_S = 48 kHz, system clock = 256 f_S, and 16-bit data (unless otherwise noted).

PARAMETER		TEST CONDITIONS	PCM3793RHB, PCM3794RHB			UNIT
			MIN	TYP	MAX	
Digital Input to Headphone Output Through DAC (HPOL and HPOR)						
R_L = 16 Ω or 32 Ω, ALC = OFF, volume = 0 dB, speaker = powered down, analog mixing = disabled, not capless mode						
DYNAMIC PERFORMANCE						
	Full-scale output voltage	0 dB		2.828		Vp-p
				1		Vrms
SNR	Signal-to-noise ratio	EIAJ, A-weighted	84	93		dB
THD+N	Total harmonic distortion + noise	30 mW, R_L = 32 Ω, volume = 0 dB		0.1%		
		40 mW, R_L = 16 Ω, volume = –1 dB		0.03%		
	Load resistance		16			Ω
PSRR	Power-supply rejection ratio	200 Hz, 140 mVp-p		–40		dB
		1 kHz, 140 mVp-p		–45		
		20 kHz, 140 mVp-p		–32		
Line Input to Headphone Output Through Mixing Path (HPOL and HPOR)						
R_L = 16 Ω or 32 Ω, ALC = OFF, volume = 0 dB, speaker = powered down, analog mixing = enabled, not capless mode						
DYNAMIC PERFORMANCE						
	Full-scale output voltage	0 dB		2.828		Vp-p
				1		Vrms
SNR	Signal-to-noise ratio	EIAJ, A-weighted	84	93		dB
	Load resistance		16			Ω
Digital Input to Speaker Output Through DAC (SPOLP, SPOLN, SPORP, and SPORN): PCM3793						
R_L = 8 Ω, ALC = OFF, volume = 0 dB, headphone = powered down, analog mixing = disabled						
DYNAMIC PERFORMANCE						
	Full-scale output voltage	0 dB		2.52		Vp-p
				0.9		Vrms
SNR	Signal-to-noise ratio	EIAJ, A-weighted	84	93		dB
THD+N	Total harmonic distortion + noise	400 mW, R_L = 8Ω, volume = 0 dB		0.3%		
	Load resistance		8			Ω
PSRR	Power-supply rejection ratio	200 Hz, 140 mVp-p		–50		dB
		1 kHz, 140 mVp-p		–45		
		20 kHz, 140 mVp-p		–25		
Line Input to Speaker Output Through Mixing Path (SPOLP, SPOLN, SPORP, and SPORN): PCM3793						
R_L = 8Ω, ALC = OFF, volume = 0 dB, headphone = powered down, analog mixing = enabled						
DYNAMIC PERFORMANCE						
	Full-scale output voltage	0 dB		2.52		Vp-p
				0.9		Vrms
SNR	Signal-to-noise ratio	EIAJ, A-Weighted	84	93		dB

ELECTRICAL CHARACTERISTICS (continued)

All specifications at T_A = 25°C, V_{DD} = V_{IO} = V_{CC} = V_{PA} = 3.3 V, f_S = 48 kHz, system clock = 256 f_S, and 16-bit data (unless otherwise noted).

PARAMETER		TEST CONDITIONS	PCM3793RHB, PCM3794RHB			UNIT
			MIN	TYP	MAX	
Line Input to Digital Output Through ADC (AIN1L/R, AIN2L/R, AIN3L, and AIN3L/R)						
ALC = OFF, microphone boost = 0 dB, PGA = 0 dB, speaker and headphone = powered down, analog mixing = disabled						
DYNAMIC PERFORMANCE						
	Full-scale input voltage	0 dB		2.828		Vp-p
				1		Vrms
	Dynamic range	EIAJ, A-weighted		90		dB
SNR	Signal-to-noise ratio	EIAJ, A-weighted	83	90		dB
	Channel separation			87		dB
THD+N	Total harmonic distortion + noise	–1 dB		0.009%		
ANALOG INPUT						
	Center voltage			0.5 V_{CC}		V
	Input impedance		10	20		kΩ
Microphone Bias						
ALC = OFF, microphone boost = 0 dB, PGA = 0 dB, speaker and headphone = powered down, analog mixing = disabled						
	Bias voltage			0.75 V_{CC}		V
	Bias source current			2		mA
	Output noise			14		µV
Filter Characteristics						
INTERPOLATION FILTER FOR DAC						
	Pass band				0.454 f_S	
	Stop band		0.546 f_S			
	Pass-band ripple				±0.04	dB
	Stop-band attenuation		–50			dB
	Group delay			19/f_S		s
	De-emphasis error			±0.1		dB
ANALOG FILTER FOR DAC						
	Frequency response	f = 20 kHz		±0.2		dB
DECIMATION FILTER FOR ADC						
	Pass band				0.408 f_S	
	Stop band		0.591 f_S			
	Pass-band ripple				±0.02	dB
	Stop-band attenuation	f < 3.268 f_S	–60			dB
	Group delay			17/f_S		s
HIGH-PASS FILTER FOR ADC						
	Frequency response	–3 dB, f_c = 4 Hz		3.74		Hz
		–0.5 dB, f_c = 4 Hz		10.66		
		–0.1 dB, f_c = 4 Hz		24.2		
		–3 dB, f_c = 240 Hz		235.68		
		–0.5 dB, f_c = 240 Hz		609.95		
		–0.1 dB, f_c = 240 Hz		2601.2		

ELECTRICAL CHARACTERISTICS (continued)

All specifications at T_A = 25°C, V_{DD} = V_{IO} = V_{CC} = V_{PA} = 3.3 V, f_S = 48 kHz, system clock = 256 f_S, and 16-bit data (unless otherwise noted).

PARAMETER		TEST CONDITIONS	PCM3793RHB, PCM3794RHB			UNIT
			MIN	TYP	MAX	
Power Supply and Supply Current						
V_{IO}	Voltage range	V_{IO}	1.71	3.3	3.6	VDC
V_{DD}		V_{DD}	1.71	3.3	3.6	
V_{CC}		V_{CC}	2.4	3.3	3.6	
V_{PA}		V_{PA}	2.4	3.3	3.6	
	Supply current	BPZ input, all active, no load		24.3	35	mA
		All inputs are held static		9	50	µA
	Power dissipation	BPZ input		80.2	115.5	mW
		All inputs are held static		30	165	µW
Temperature Condition						
	Operation temperature		–40		85	°C
θ_{JA}	Thermal resistance			30		°C/W

PIN ASSIGNMENTS

PCM3793RHB
(TOP VIEW)

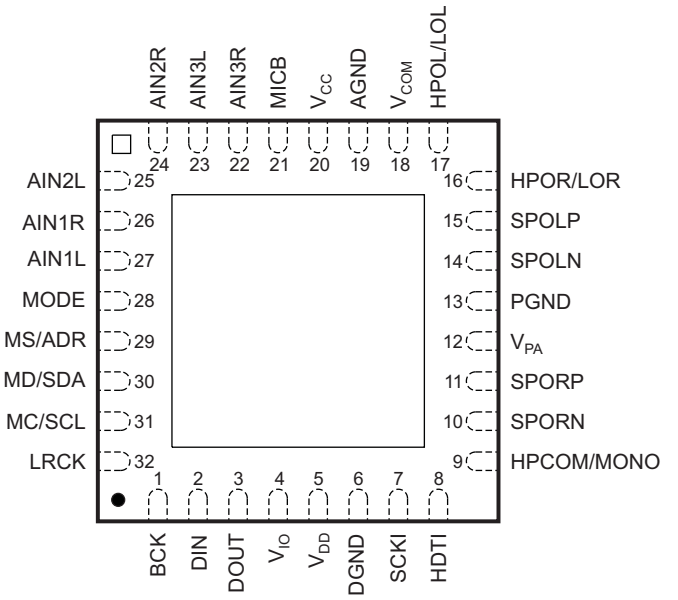

P0048-03

PCM3794RHB
(TOP VIEW)

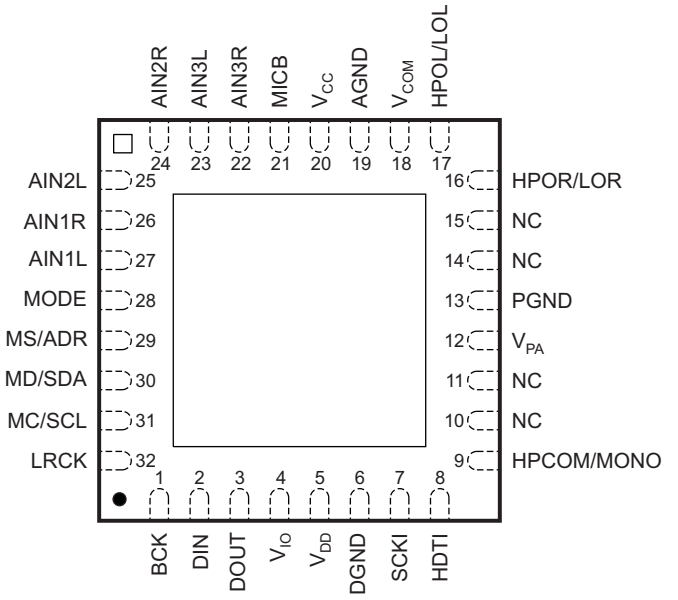

P0048-04

Table 1. TERMINAL FUNCTIONS

TERMINAL			I/O	DESCRIPTION
NAME	PCM3793RHB	PCM3794RHB		
AGND	19	19	–	Ground for analog
AIN1L	27	27	I	Analog input 1 for L-channel
AIN1R	26	26	I	Analog input 1 for R-channel
AIN2L	25	25	I	Analog input 2 for L-channel
AIN2R	24	24	I	Analog input 2 for R-channel
AIN3L	23	23	I	Analog input 3 for L-channel
AIN3R	22	22	I	Analog input 3 for R-channel
BCK	1	1	I/O	Serial bit clock
DGND	6	6	–	Digital ground
DIN	2	2	I	Serial audio data input
DOUT	3	3	O	Serial audio data output
HDTI	8	8	I	Headphone plug insertion detection
HPCOM/MONO	9	9	O	Headphone common/mono line output
HPOL/LOL	17	17	O	Headphone/lineout for R-channel
HPOR/LOR	16	16	O	Headphone/lineout for L-channel
LRCK	32	32	I/O	Left and right channel clock
MC/SCL	31	31	I	Mode control clock for three-wire/two-wire interface
MD/SDA	30	30	I/O	Mode control data for three-wire/two-wire interface
MICB	21	21	O	Microphone bias source output
MODE	28	28	I	Two- or three-wire interface selection (LOW: SPI, HIGH: I^2C)
MS/ADR	29	29	I	Mode control select for three-wire/two-wire interface
PGND	13	13	–	Ground for speaker power amplifier
SCKI	7	7	I	System clock
SPOLN	14	–	O	Speaker output L-channel for negative (PCM3793)
SPOLP	15	–	O	Speaker output L-channel for positive (PCM3793)
SPORN	10	–	O	Speaker output R-channel for negative (PCM3793)
SPORP	11	–	O	Speaker output R-channel for positive (PCM3793)
V_{CC}	20	20	–	Analog power supply
V_{COM}	18	18	–	Analog common voltage
V_{DD}	5	5	–	Power supply for digital core
V_{IO}	4	4	–	Power supply for digital I/O
V_{PA}	12	12	–	Power supply for power amplifier

FUNCTIONAL BLOCK DIAGRAM

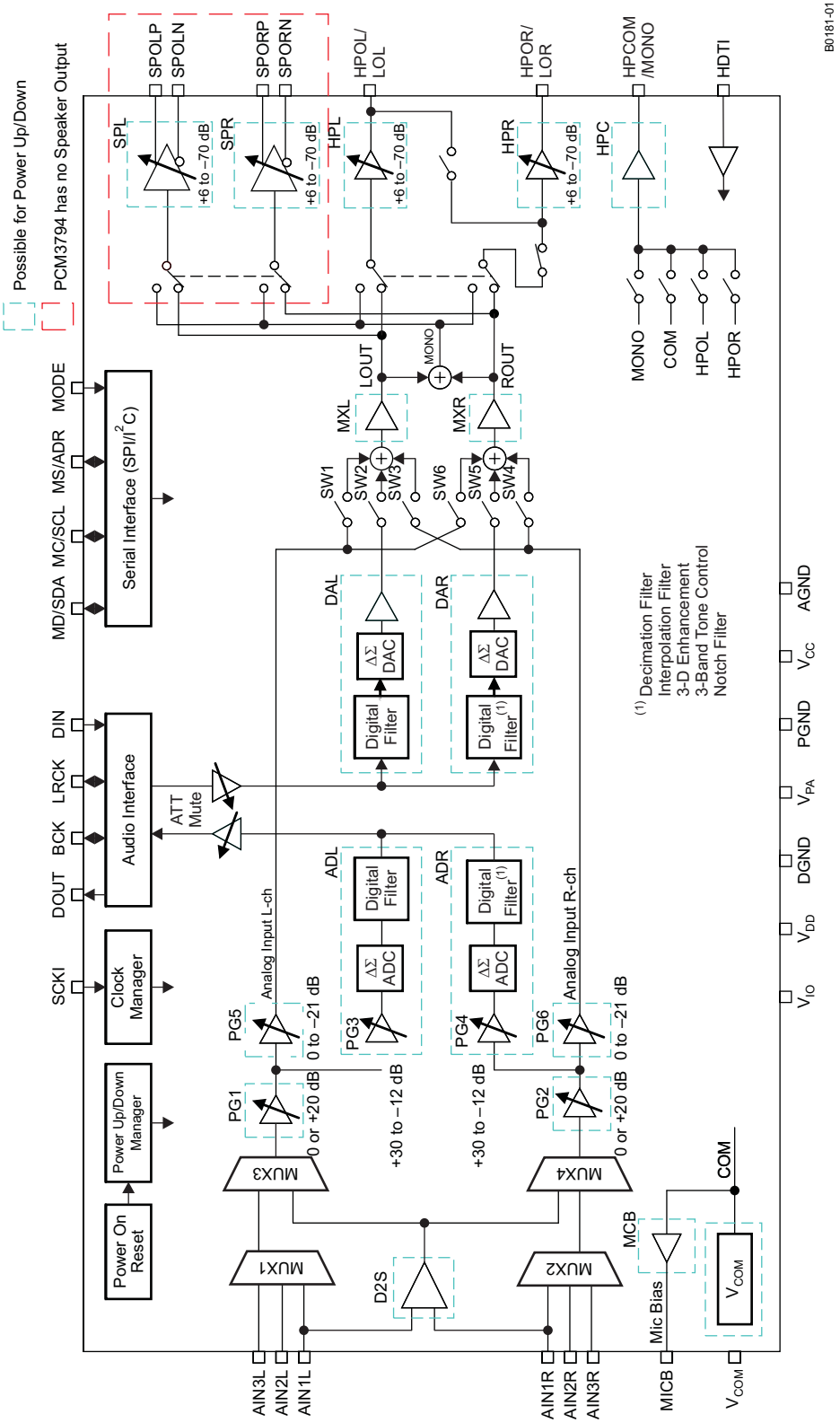

TYPICAL PERFORMANCE CURVES

All specifications at T_A = 25°C, V_{DD} = V_{IO} = V_{CC} = V_{PA} = 3.3 V, f_S = 8 to 48 kHz, system clock = 256 f_S, and 16-bit data, unless otherwise noted.

INTERPOLATION FILTER, STOP BAND

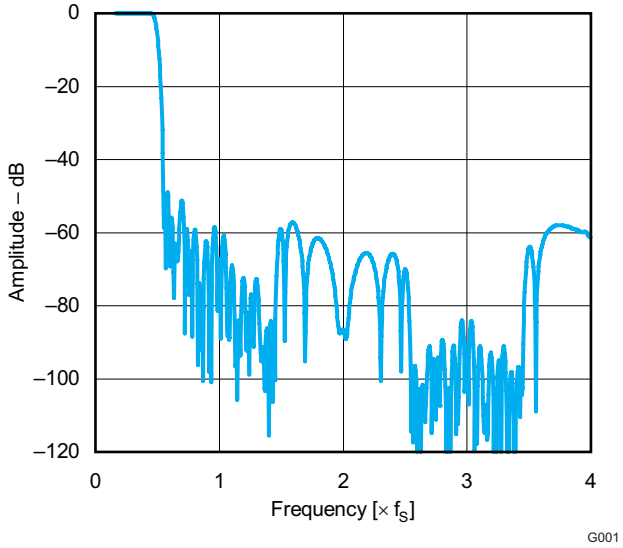

Figure 1.

INTERPOLATION FILTER, PASS BAND

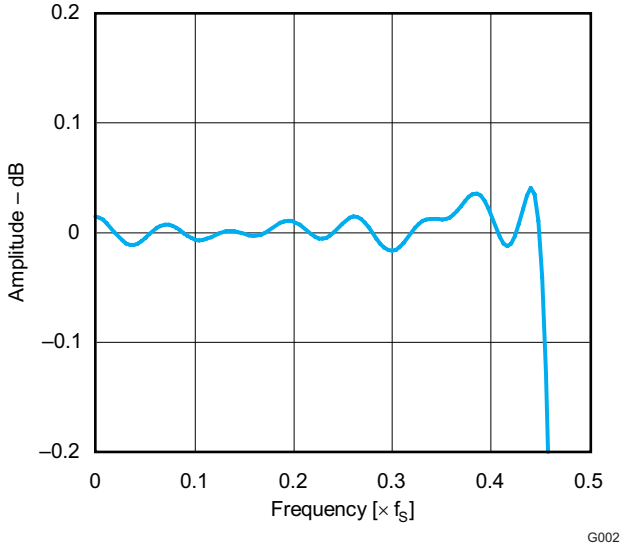

Figure 2.

DECIMATION FILTER, STOP BAND

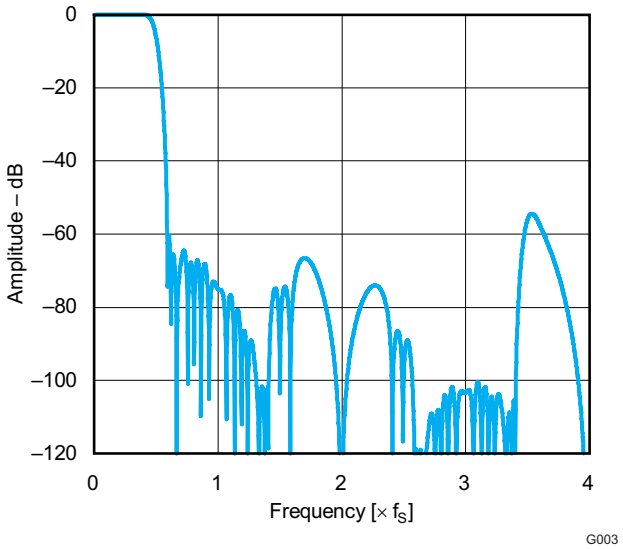

Figure 3.

DECIMATION FILTER, PASS BAND

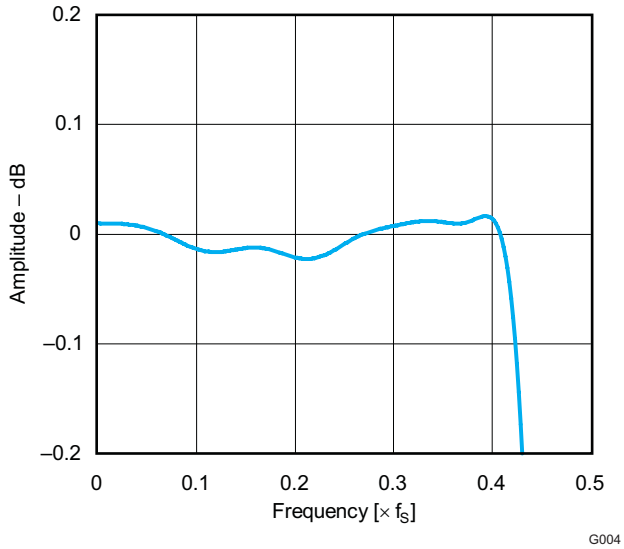

Figure 4.

TYPICAL PERFORMANCE CURVES (continued)

All specifications at T_A = 25°C, V_{DD} = V_{IO} = V_{CC} = V_{PA} = 3.3 V, f_S = 8 to 48 kHz, system clock = 256 f_S, and 16-bit data, unless otherwise noted.

HIGH-PASS FILTER PASS-BAND CHARACTERISTICS (f_C = 4 Hz at f_S = 48 kHz)

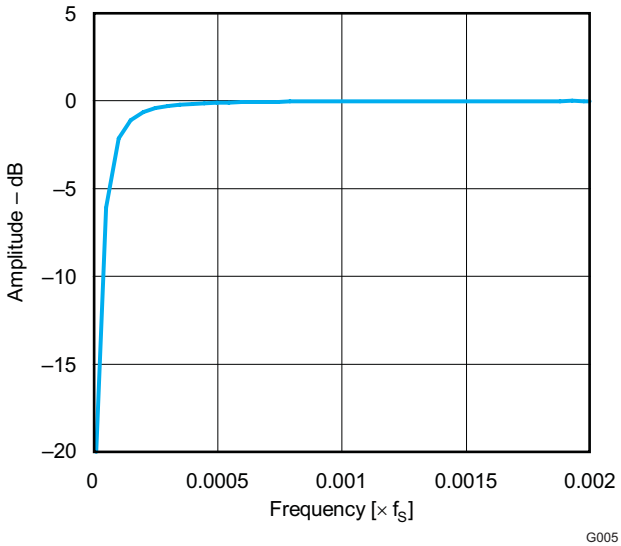

Figure 5.

HIGH-PASS FILTER PASS-BAND CHARACTERISTICS (f_C = 240 Hz at f_S = 48 kHz)

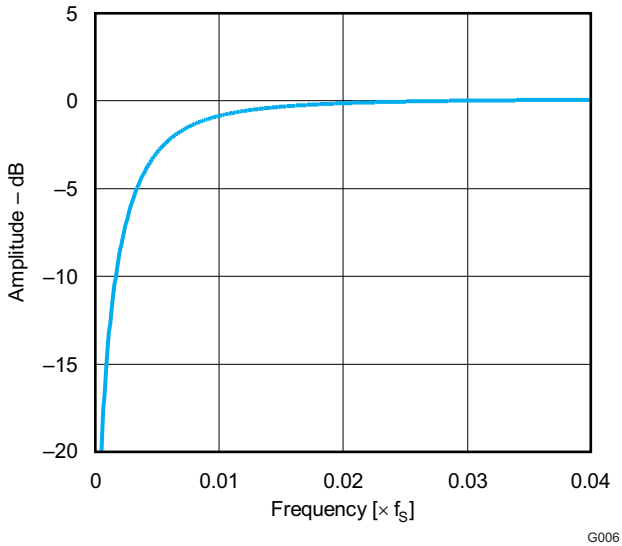

Figure 6.

All specifications at T_A = 25°C, V_{DD} = V_{IO} = V_{CC} = V_{PA} = 3.3 V, f_S = 44.1 kHz, system clock = 256 f_S, and 16-bit data, unless otherwise noted.

THREE-BAND TONE CONTROL (BASS, MIDRANGE, TREBLE)

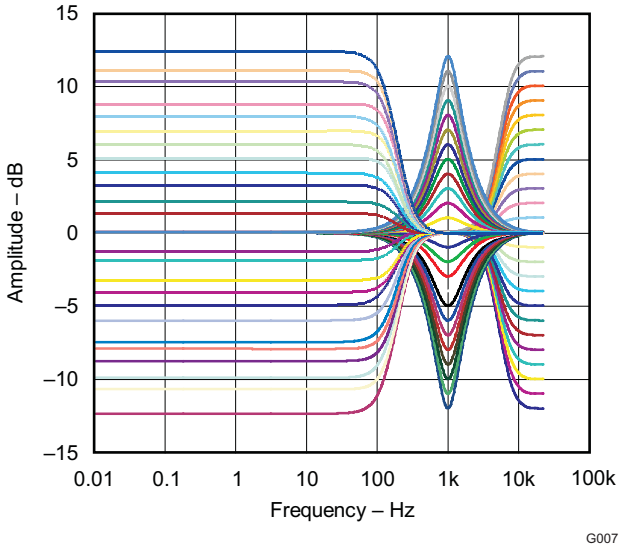

Figure 7.

THREE-BAND TONE CONTROL (BASS)

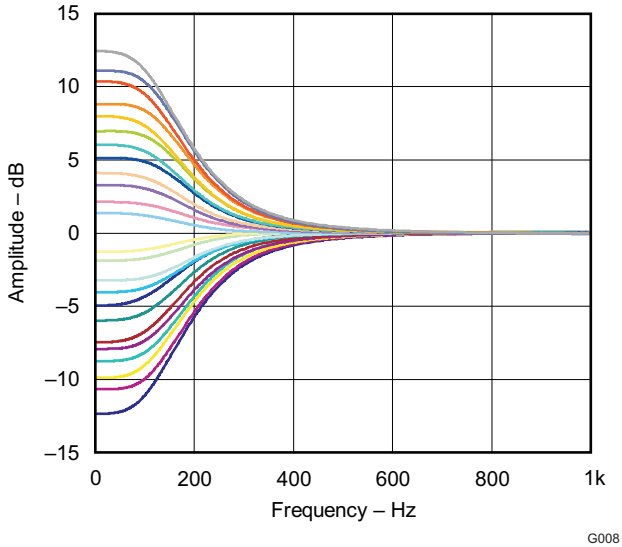

Figure 8.

TYPICAL PERFORMANCE CURVES (continued)

All specifications at T_A = 25°C, V_{DD} = V_{IO} = V_{CC} = V_{PA} = 3.3 V, f_S = 44.1 kHz, system clock = 256 f_S, and 16-bit data, unless otherwise noted.

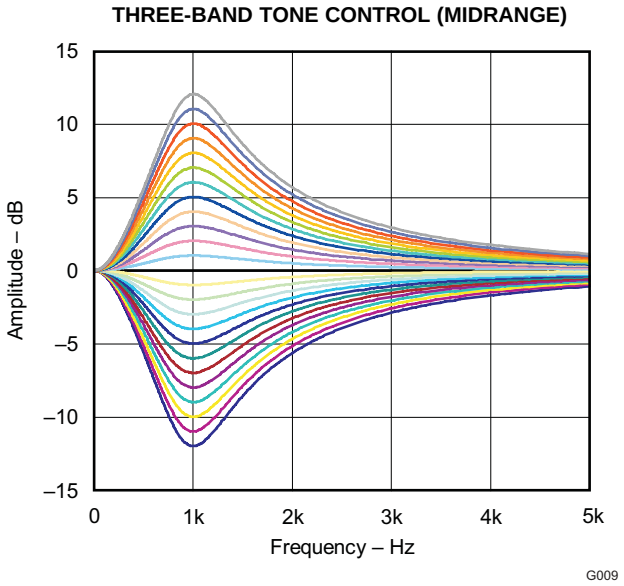

Figure 9.

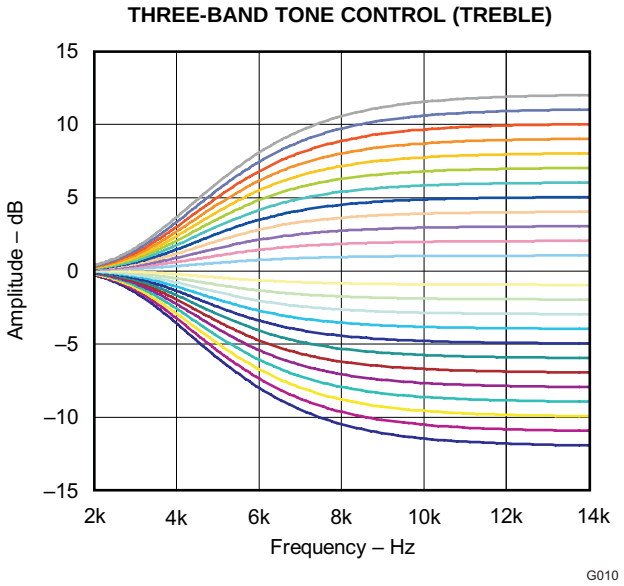

Figure 10.

All specifications at T_A = 25°C, V_{DD} = V_{IO} = V_{CC} = V_{PA} = 3.3 V, f_S = 48 kHz, system clock = 256 f_S, and 16-bit data, unless otherwise noted.

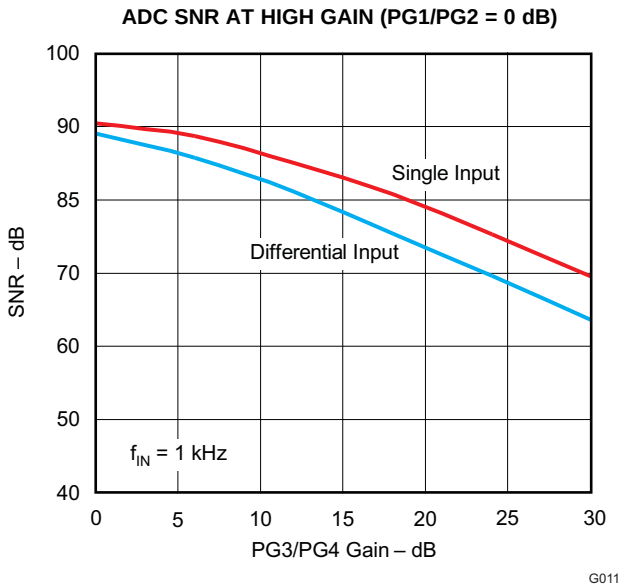

Figure 11.

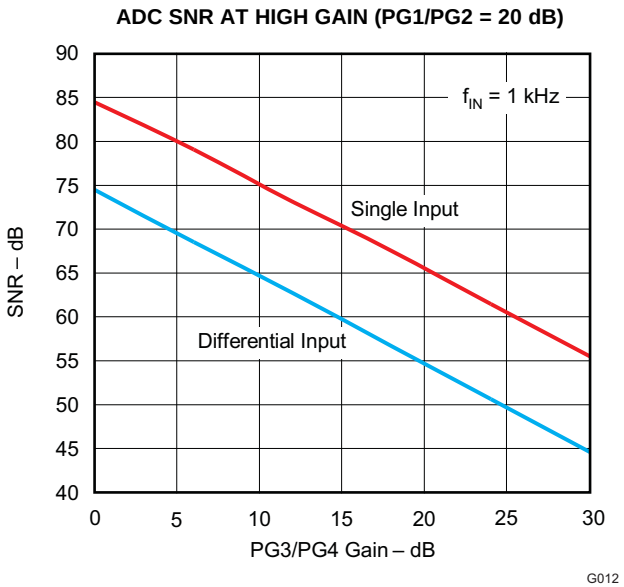

Figure 12.

TYPICAL PERFORMANCE CURVES (continued)

All specifications at T_A = 25°C, V_{DD} = V_{IO} = V_{CC} = V_{PA} = 3.3 V, f_S = 48 kHz, system clock = 256 f_S, and 16-bit data, unless otherwise noted.

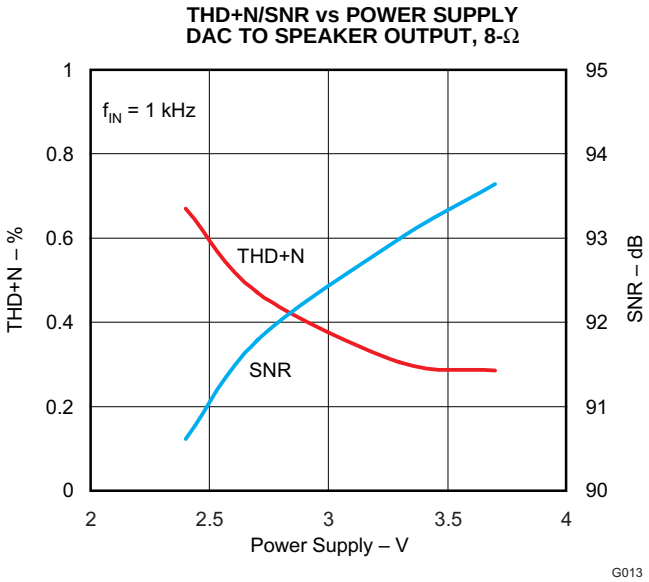

Figure 13.

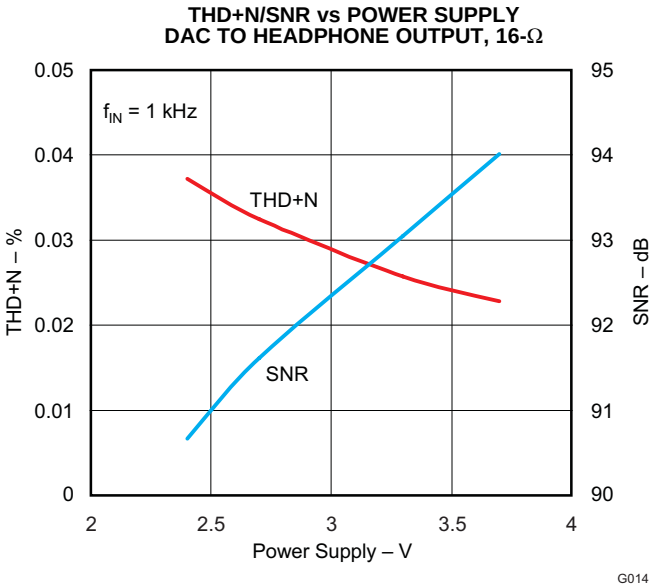

Figure 14.

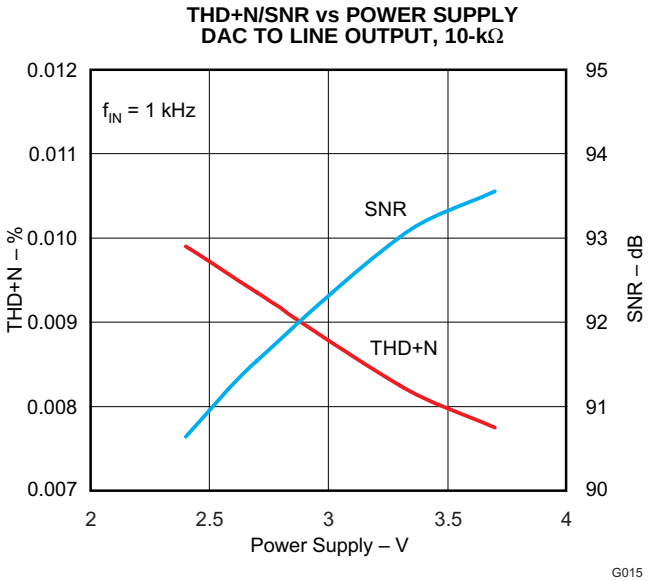

Figure 15.

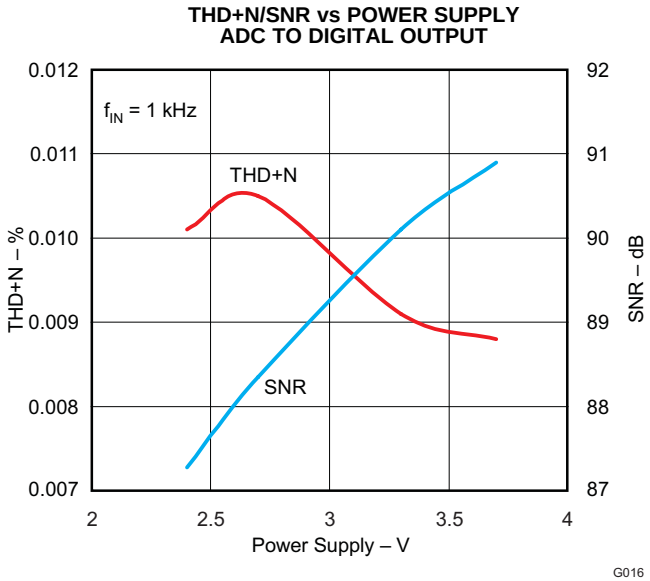

Figure 16.

TYPICAL PERFORMANCE CURVES (continued)

All specifications at T_A = 25°C, V_{DD} = V_{IO} = V_{CC} = V_{PA} = 3.3 V, f_S = 48 kHz, system clock = 256 f_S, and 16-bit data, unless otherwise noted.

OUTPUT POWER vs POWER SUPPLY (HEADPHONE, 16-Ω)

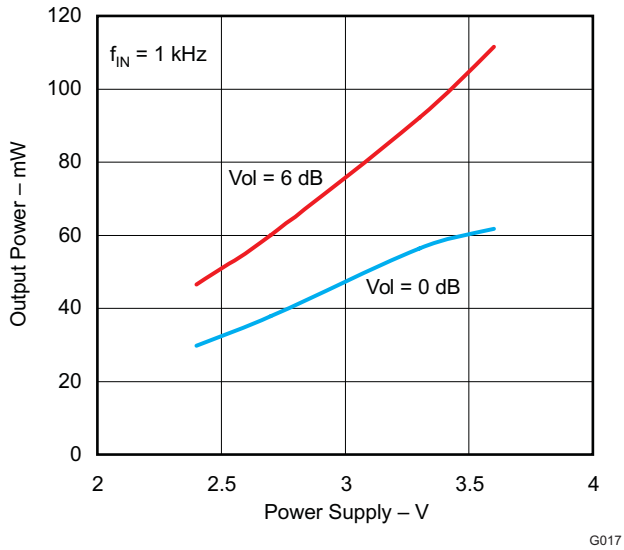

Figure 17.

OUTPUT POWER vs POWER SUPPLY (SPEAKER, 8-Ω)

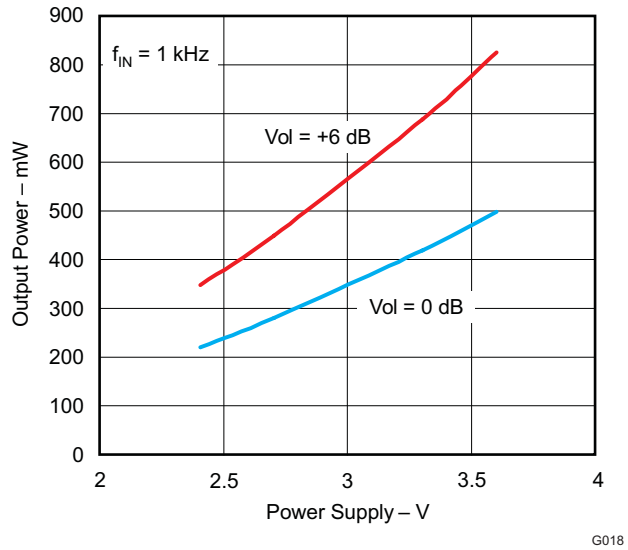

Figure 18.

THD+N vs OUTPUT POWER (HEADPHONE, 16-Ω, VOLUME = 6 dB)

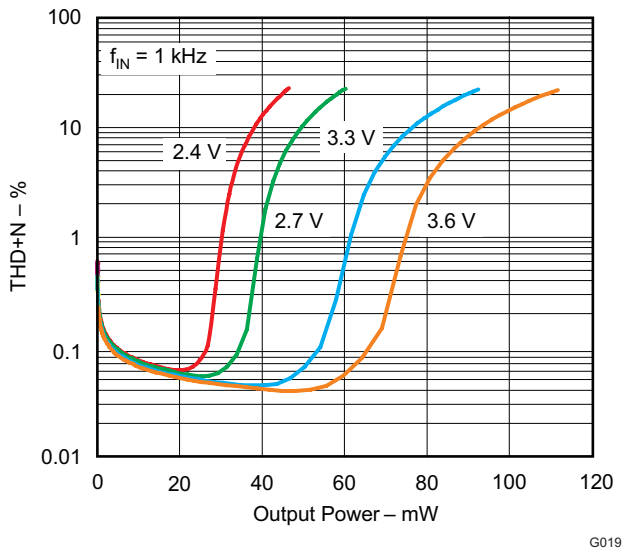

Figure 19.

THD+N vs OUTPUT POWER (HEADPHONE, 16-Ω, VOLUME = 0 dB)

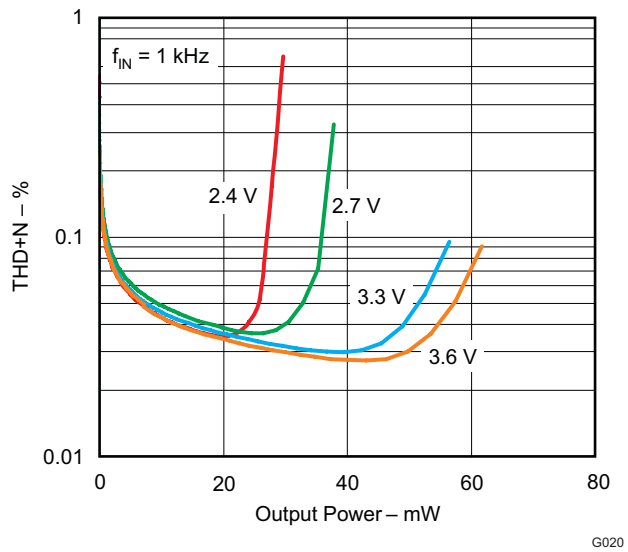

Figure 20.

TYPICAL PERFORMANCE CURVES (continued)

All specifications at T_A = 25°C, V_{DD} = V_{IO} = V_{CC} = V_{PA} = 3.3 V, f_S = 48 kHz, system clock = 256 f_S, and 16-bit data, unless otherwise noted.

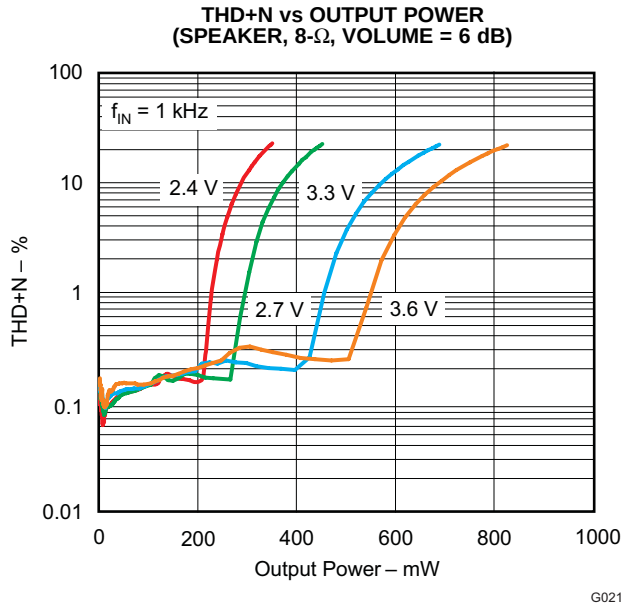

Figure 21.

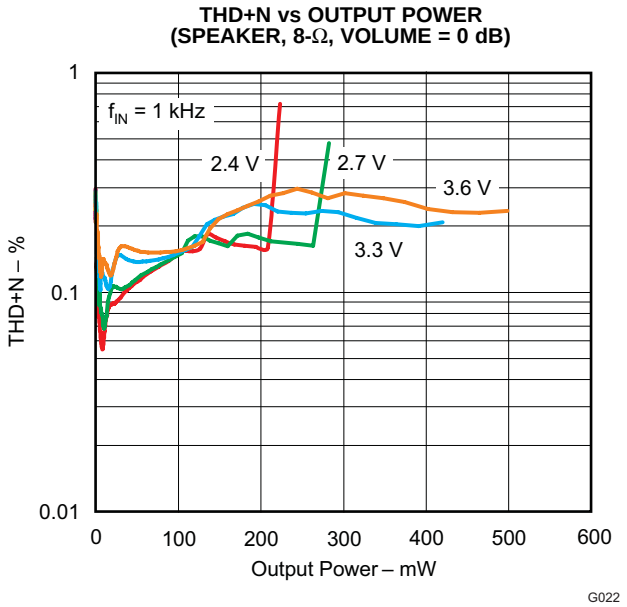

Figure 22.

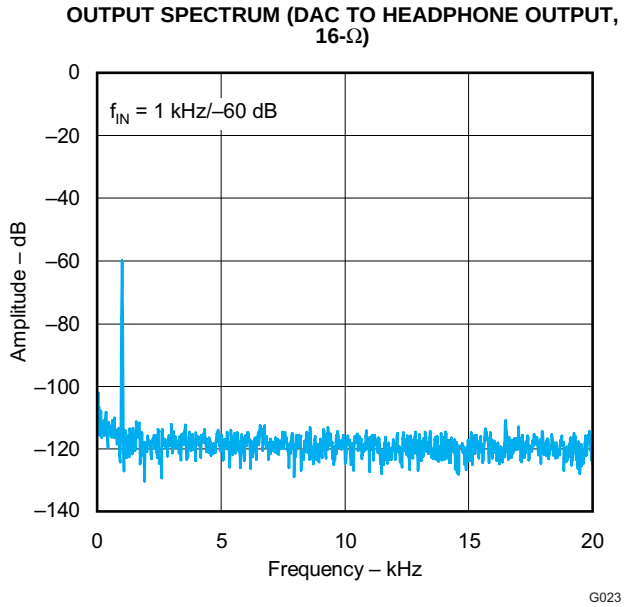

Figure 23.

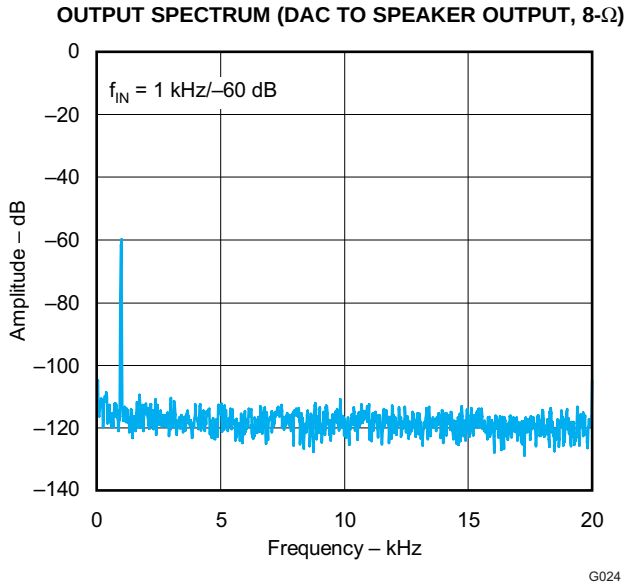

Figure 24.

PCM3793/94 DESCRIPTION

Analog Input

The AIN1L, AIN1R, AIN2L, AIN2R, AIN3L, and AIN3R pins can be used as microphone or line inputs with selectable 0- or 20-dB boost and 1-Vrms input. All analog inputs have high input impedance (20 kΩ), which is not changed by gain settings. One pair of inputs is selected by register 87 (AIL[1:0], AIR[1:0]). AIN1L and AIN1R can be used as monaural differential inputs.

Gain Settings for Analog Input

Analog signals can be adjusted from 30 dB to –12 dB in 1-dB steps following the 0- or 20-dB boost amplifier. The gain level can be set for each channel by registers 79 and 80 (ALV[5:0], ARV[5:0]).

A/D Converter

The ADC includes a multilevel delta-sigma modulator, aliasing filter, decimation filter, high-pass filter, and notch filter and can accept a 1-Vrms full-scale voltage input. The decimation filter has a digital soft mute controlled by register 81 (RMUL, RMUR). The high-pass filter can be disabled by register 81 (HPF[1:0]) and the notch filter can be disabled by registers 96 to 104 if it is not necessary to cancel a dc offset or compensate for wind noise.

D/A Converter

The DAC includes a multilevel delta-sigma modulator and interpolation filter. These can be used to obtain high PSRR, low jitter sensitivity, and low out-of-band noise quickly and easily. The interpolation filter includes digital attenuator, digital soft mute, three-band tone control (bass, midrange and treble), and 3-D sound controlled by registers 92 to 95. The de-emphasis filter (32, 44.1 and 48 kHz) is controlled by registers 68 to 70 (ATL[5:0], ATR[5:0], PMUL, PMUR, DEM[1:0]). Oversampling rate control can reduce out-of-band noise when operating at low sampling rate by using register 70 (OVER).

Common Voltage

The V_{COM} pin is normally biased to 0.5 V_{CC}, and it provides the common voltage to internal circuitry. It is recommended that a 10-µF capacitor be connected between this pin and ground to provide clean voltage and avoid pop noise. The PCM3793/94 may have a little pop noise on each analog output if a capacitor smaller than 10 µF is used.

Line Output

The HPOL/LOL and HPOR/LOR and HPCOM/MONO pins can be used as a monaural single-ended, monaural differential, or stereo single-line output with 1-V_{rms} output by register 74 (HPS[1:0]). The line outputs can drive a 10-kΩ load. These outputs include an analog volume amplifier, except for the HPCOM/MONO pin that can be set from 6 dB to –70 dB and mute with 0.5-, 1-, 2- or 4-dB steps for each output, as controlled by registers 64 and 65 (HLV[5:0], HRV[5:0], HMUL, HMUR). A dc blocking capacitor is not required when connecting to an external speaker amplifier with monaural differential input. The center voltage is 0.5 V_{CC} with zero data input.

Headphone Output

The HPOL/LOL, HPOR/LOR, and HPCOM/MONO pins are stereo, monaural, or monaural differential headphone outputs with more than 30 or 40 mWrms output power into a 32- or 16-Ω load, either through a dc blocking capacitor or without a capacitor, as selected by register 74 (HPS[2:0]). These outputs include analog volume amplifiers, except for the HPCOM/MONO pin, which can be set from 6 dB to –70 dB with 0.5-, 1-, 2- or 4-dB steps for each output using registers 64 and 65 (HLV[5:0], HRV[5:0], HMUL, HMUR). The center voltage is 0.5 V_{CC} with zero data input.

Headphone Plug Insertion Detection

The HDTI pin detects the insertion status of headphone plug and writes the status to register 77 (HPDS), which can be read by the I^2C interface. The polarity of the status indication can be inverted by register 75 (HPDP). The headphone and speaker amplifiers are disabled or enabled automatically by headphone plug insertion/extractrion if register 75, HPDE = 1. They are controlled by register settings if register 75, HPDE = 0. HPCOM/MONO is not affected by the status when register 74, CMS[0] = 1.

Speaker Output (Class-D, PCM3793)

The SPOLP, SPOLN and SPORP, SPORN pins are stereo or mono speaker differential outputs (BTL) with a maximum of 700 mWrms (V_{PA} = 3.6 V, volume = 6 dB) into an 8-Ω load. The digital speaker amplifier offers maximum battery life and minimum heat, eliminates the LC low-pass filter, and includes analog volume amplification for each output from 6 dB to –70 dB with 0.5-, 1-, 2- or 4-dB steps, which can be set by register 66, 67 (SLV[5:0], SLR[5:0]). Spectrum spreading technology and selectable switching frequency to reduce EMI noise is controlled by register 71 (DFQ[2:0], SPS[1:0] and SPSE). The speaker amplifiers have a thermal shutdown circuit which detects when the device temperature reaches approximately 150°C; then the speaker amplifier is powered down.

Analog Mixing and Bypass

Mixing amplifiers (MXL, MXR) mix gain-controlled analog inputs from the AIN pins which have bypassed ADC and DAC and direct the mixed signal to the headphone or speaker outputs. Analog mixing is controlled by register 87 (AD2S, AIR[1:0], AIL[1:0]), register 88 (MXR[2:0], MXL[2:0]), and register 89 (GMR[2:0], GML[2:0]). The analog mixing functions are suitable for FM radio, headset, and another analog sources without an ADC.

Microphone Bias

The MICB pin is the microphone bias source for an external microphone and can provide 2 mA (typical) bias current.

Automatic Level Control (ALC) for Recording

The sound for microphone recording should be expanded to a suitable level without saturation. The digitally controlled automatic level control (ALC) provides automatic expansion for small input signals and compression for large input signals while recording. The expansion level, compression level, attack time, and recovery time can be selected by register 83. The register 83 description explains the details of these settings.

3-D Sound

A 3-D sound effect is provided by mixing L-channel and R-channel data with band pass filter that can be controlled two parameters, mixing ratio and band pass filter characteristic by register 95 (3DP[3:0], 3FLO). The 3-D sound effect can be applied to the DAC digital input or ADC digital output, as selected by register 95 (SDAS).

Three-Band Tone Control

Tone control has bass, midrange, and treble controls that can be adjusted from 12 dB to –12 dB in 1-dB steps by registers 92 to 94 (LGA[4:0], MGA[4:0] and HGA[4:0]). Register 92 (LPAE) attenuates the digital input signal automatically to prevent clipping of the output signal at settings above 0 dB for bass control. LPAE has no effect on midrange and treble controls.

High-Pass Filter and Notch Filter

The high-pass filter eliminates the dc offset of the ADC analog signal and can be set for a cutoff frequency of 4 Hz or 240 Hz at of 48-kHz sampling frequency by register 81 (HPF[1:0]). A register 95 (SDAS) selection applies the filter to either the DAC digital input or the ADC digital output.

Notch filters are provided to remove noise of a particular frequency, such as CCD noise, motor noise, or other mechanical noise in a particualr application. The PCM3793/94 has two notch filters for which the center frequency and frequency bandwidth can be programmed by registers 96 to 104. A register 95 (SDAS) selection applies the filter to either the DAC digital input or the ADC digital output.

Digital Monaural Mixing

Register 96 (MXEN) enables or disables the internal mixing of stereo digital data to monaural digital data.

Zero-Cross Detection

Zero-cross detection minimizes audible zipper noise while changing analog volume and digital attenuation. This function can be applied to digital input or digital output by register 86 (ZCRS).

Short Protection

The short-circuit protection on each headphone output prevents damage to the device while an output is shorted to V_{PA}, an output is shorted to PGND, or any two outputs are shorted together. When the short circuit is detected on the outputs, the PCM3793/94 powers down the shorted amplifier at once. The short-protection status can be monitored by reading register 77 (STHC, STHL, SCHR) through the I^2C interface. Short-circuit protection operates in any enabled headphone amplifier.

Thermal Protection

The thermal protection on the speaker amplifier prevents damage to the device when the internal die temperature exceeds approximately 150°C. Once the die temperature exceeds the thermal set point, all analog outputs are powered down. This status can be reset by setting register 76 (RLSR, RLSL) and can be watched by reading register 77 (STSR, STSL) on the two-wire (I^2C) interface. Thermal protection operates in any enabled speaker amplifier.

Pop-Noise Reduction Circuit

The pop-noise reduction circuit prevents audible noise when turning the power supply on/off and powering the device up/down in portable applications. It is recommended to establish the register settings in the sequence that is shown in Table 3 and Table 4. No particular external parts are required, and power-supply sequencing is not necessary.

Power Up/Down for Each Module

Using register 72 (PMXL, PMXR), register 73 (PBIS, PDAR, PDAL, PHPC, PHPR, PHPL, PSPR, PSPL), register 82 (PAIR, PAIL, PADS, PMCB, PADR, PADL), and register 90 (PCOM), unused modules can be powered down to minimize power consumption (7 mW during playback only and 13 mW when recording only).

Digital Interface

All digital I/O pins can interface at various power supply voltages. The V_{IO} pin can be connected to a 1.71-V to 3.6-V power supply.

Power Supply

The V_{CC} pin and the V_{PA} pin can be connected to 2.4 V to 3.6 V. The same voltage must be applied to both pins. The V_{DD} pin and the V_{IO} pin can be connected to 1.71 V to 3.6 V. A different voltage can be applied to each of these pins (for example, V_{DD} = 1.8 V, V_{IO} = 3.3 V).

DESCRIPTION OF OPERATION

System Clock Input

The PCM3793/94 can accept clocks of various frequencies without a PLL. They are used for clocking the digital filters and automatic level control and delta-sigma modulators and are classified as common-audio and application-specific clocks. Table 2 shows frequencies of the common-audio clock and application-specific clock. Figure 25 shows the timing requirements for system clock inputs. The sampling rate and frequency of the system clocks are determined by the settings of register 86 (MSR[2:0]) and register 85 (NPR[5:0]). Note that the sampling rate of the application-specific clock has a little sampling error.

Table 2. System Clock Frequencies

CLOCK	FREQUENCIES
Common-audio clock	11.2896, 12.288, 16.9344, 18.432 MHz
Application-specific clock	12, 13, 13.5, 24, 26, 27, 19.2, 19.68, 38.4, 39.36 MHz

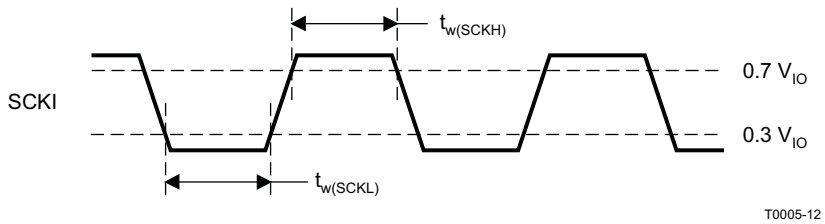

PARAMETERS	SYMBOL	MIN	UNITS
System-clock pulse duration, high	$t_{w(SCKH)}$	7	ns
System-clock pulse duration, low	$t_{w(SCKL)}$	7	ns

Figure 25. System Clock Timing

Power-On Reset and System Reset

The power-on-reset circuit outputs a reset signal, typically at V_{DD} = 1.2 V, and this circuit does not depend on the voltage of other power supplies (V_{CC}, V_{PA} and V_{IO}). Internal circuits are cleared to default status, then signals are removed from all analog and digital outputs. The PCM3793/94 does not require any power supply sequencing. Register data must be written after turning all power supplies on.

System reset is enabled by setting register 85 (SRST), and all register are cleared automatically. All circuits are reset to their default status at once. Note that the PCM3793/94 has audible pop noise on the analog outputs when enabling SRST.

Power On/Off Sequence

To reduce audible pop noise, a sequence of register settings is required after turning all power supplies on when powering up, or before turning the power supplies off when powering down. If some modules are not required for a particular application or operation, they should be placed in the power-down state after performing the power-on sequence. The recommended power-on and power-off sequences are shown in Table 3 and Table 4, respectively.

Table 3. Recommended Power-On Sequence

STEP	REGISTER SETTINGS	NOTE
1	–	Turn on all power supplies(1)
2	4027h	Headphone amplifier L-ch volume (–6 dB)(2)
3	4127h	Headphone amplifier R-ch volume (–6 dB)(2)
4	4227h	Speaker amplifier L-ch volume (–6 dB)(2)
5	4327h	Speaker amplifier R-ch volume (–6 dB)(2)
6	4427h	Digital attenuator L-ch (–24 dB)(2)
7	4527h	Digital attenuator R-ch (–24 dB)(2)
8	4620h	DAC audio interface format (left-justified)(3)
9	4BC0h	Headphone detection enable and inverting polarity. Short and thermal detection enable
10	5102h	ADC audio interface format (left-justified)(3)
11	5A10h	V_{COM} ramp up/down time control. PG1, PG2 gain control (0 dB)
12	49E0h	DAC (DAL, DAR) and analog bias power up
13	5601h	Zero-cross detection enable
14	4803h	Analog mixer (MXL, MXR) power up
15	5811h	Analog mixer input (SW2, SW5) select
16	49FCh	Headphone amplifier (HPL, HPR, HPC) power up

(1) Power supply sequencing is not required. It is recommended to set register data with system clock input after turning all power supplies on.
(2) Any level is acceptable for volume or attenuation. Level should be resumed by register data recorded when system power off.
(3) Audio interface format should be set to match the DSP or decoder being used.

Table 3. Recommended Power-On Sequence (continued)

STEP	REGISTER SETTINGS	NOTE
17	4C03h	Speaker amplifier shut down release
18	4A01h	V_{COM} power up
19	523Fh	Analog front end (ADL, ADR, D2S, MCB, PG1, 2, 5, 6) power up
20	5711h	Analog input (MUX3, MUX4) select. Analog input (MUX1, MUX2) select
21	4F0Ch	Analog input L-ch (PG3) volume (0 dB)(2)
22	500Ch	Analog input R-ch (PG4) volume (0 dB)(2)
23	–	Any settings for other devices or wait time(4)(5)
24	49FFh	Speaker amplifier (SPL, SPR) power up (5)

(4) The PCM3793 requires time for V_{COM} to reach the common level from GND level. The delay depends on the capacitor value for V_{COM} and the setting of register 90 CMT[1:0]. Wait time [s] = $4 \times C_{VCOM} \times R_{CMT}$
(5) The PCM3794 does not require this setting because it has no speaker output.

Table 4. Recommended Power-Off Sequence

STEP	REGISTER SETTINGS	NOTE
1	447Fh	DAC L-ch digital soft-mute enable(1)
2	457Fh	DAC R-ch digital soft-mute enable(1)
3	5132h	ADC L-ch/R-ch digital soft-mute enable, ADC audio interface format (left-justified)(2)
4	5811h	Analog mixer input (SW2, SW5) Select
5	49FFh	Headphone amplifier (HPL, HPR, HPC) power up (4), speaker amplifier (SPL, SPR) power up(3)(4)
6	5200h	Analog front end (ADL, ADR, D2S, MCB, PG1, 2, 5, 6) power down
7	5A10h	V_{COM} ramp up/down time control, PG1, PG2 gain control (0 dB)
8	4A00h	V_{COM} power down
9	–	Wait time (100 ms)
10	5A00h	V_{COM} ramp up/down time control
11	–	Wait time (100 ms)
12	5A20h	V_{COM} ramp up/down time control
13	–	Wait time (4000 ms)
14	5A30h	V_{COM} ramp up/down time control
15	49E0h	Headphone amplifier (HPL, HPR, HPC) power down, speaker amplifier (SPL, SPR) power down
16	4800h	Analog mixer (MXL, MXR) power down
17	4900h	DAC (DAL, DAR) and analog bias power down
18	–	Turn off all power supplies(5)

(1) Any level is acceptable for volume or attenuation.
(2) Audio interface format should be set according to DSP or decoder.
(3) PCM3794 has no speaker amplifier.
(4) These modules must be powered up during the power-down sequence.
(5) Power supply sequencing is not required. It is recommended to turn off all power supply after register settings with system clock input.

Power-Supply Current

The current consumption of the PCM3793/94 depends on power up/down status of each circuit module. In order to reduce the power consumption, disabling each module is recommended when it is not used in an application or operation. Table 5 shows the current consumption in some states.

Table 5. Power Consumption Table

OPERATION MODE	POWER SUPPLY CURRENT [mA]					PD [mW]	PD [mW]
	V_{DD} (1.8 V)	V_{DD} (3.3 V)	V_{CC} (3.3 V)	V_{PA} (3.3 V)	V_{IO} (3.3 V)	TOTAL (V_{DD} = 1.8 V)	TOTAL (V_{DD} = 3.3 V)
All Power Down	0	0	0.007	0.002	0	0.03	0.03
All Active	2.5	5.1	7.5	11.6	0.1	67.7	80.2
PLAYBACK WITH DIGITAL INPUT							
Line output and headphone output	1.18	2.51	1.79	0.54	0.09	10.1	16.3
Headphone output with sound effect	1.81	3.84	1.79	0.54	0.09	11.2	20.7
Capless headphone output	1.18	2.51	1.8	0.75	0.09	10.8	17.0
Headphone output with line input (AIN2L/AIN2R)	1.18	2.52	2.09	0.54	0.09	11.1	17.3
Headphone output with mono microphone input (AIN1L, 20 dB)	1.18	2.52	2.5	0.54	0.09	12.5	18.6
Headphone output with mono differential microphone input (AIN1L/AIN1R, 20 dB)	1.18	2.52	2.8	0.54	0.09	13.4	19.6
Stereo speaker output	1.21	2.58	2.18	10.94	0.09	45.8	52.1
Mono speaker output	1.20	2.57	2.01	5.61	0.09	27.6	33.9
Speaker output with line input (AIN2L/AIN2R)	1.21	2.57	2.48	10.95	0.09	46.8	53.1
Speaker output with mono microphone input (AIN1L, 20 dB)	1.21	2.58	2.89	10.96	0.09	48.2	54.5
Speaker output with mono differential microphone input (AIN1L/AIN1R, 20 dB)	1.2	2.58	3.2	10.98	0.09	49.3	55.6
PLAYBACK WITHOUT DIGITAL INPUT							
Line input (AIN2L/AIN2R) to headphone output	0	0	0.76	0.53	0	4.3	4.3
Mono line input (AIN2L) to headphone output	0	0	0.61	0.53	0	3.8	3.8
Mono microphone Input (AIN1L, 20 dB) to headphone output	0	0	1.18	0.53	0	5.6	5.6
Mono differential microphone input (AIN1L/AIN1R, 20 dB) to headphone output	0	0	1.48	0.53	0	6.6	6.6
Mono microphone input (AIN1L, 20 dB) to speaker output	0	0	1.57	10.92	0	41.2	41.2
RECORDING							
Line input (AIN3L/AIN3R)	1.86	3.89	4.58	0.13	0.1	19.2	28.7
Microphone input (AIN1L/AIN1R, 20 dB)	1.86	3.91	5.14	0.13	0.1	21.1	30.6
Microphone input (AIN1L/AIN1R, 20 dB) with ALC	2.78	5.77	5.14	0.13	0.1	22.7	36.8
Mono microphone input (AIN1L, 20 dB)	1.4	2.93	3.6	0.13	0.1	15.2	22.3
Mono microphone input (AIN1L, 20 dB) with ALC	2.2	4.74	3.6	0.13	0.1	16.6	28.3
Mono differential microphone input (AIN1L/AIN1R, 20 dB)	1.4	2.94	3.96	0.13	0.1	16.3	23.5
Mono differential microphone input (AIN1L/AIN1R, 20 dB) with ALC	2.2	4.74	3.96	0.13	0.1	17.8	29.5
Conditions: 48 kHz/256 f_S, 16 bits, slave mode, zero data input, no load							

Audio Serial Interface

The audio serial interface for the PCM3793/94 comprises LRCK, BCK, DIN, and DOUT. Sampling rate (f_S), left and right channel are present on LRCK. DIN receives the serial data for the DAC interpolation filter, and DOUT transmits the serial data from the ADC decimation filter. BCK clocks the transfer of serial audio data on DIN and DOUT in its high-to-low transition. BCK and LRCK should be synchronized with audio system clock. Ideally, it is recommended that they be derived from it.

The PCM3793/94 requires LRCK to be synchronized with the system clock. The PCM3793/94 does not require a specific phase relationship between LRCK and the system clock.

The PCM3793/94 has both master mode and slave mode interface formats, which can be selected by register 84, MSTR. In master mode, the PCM3793/94 generates LRCK and BCK from the system clock.

Audio Data Formats and Timing

The PCM3793/94 supports I^2S, right-justified, left-justified and DSP formats. The data formats are shown in Figure 28 and are selected using register 70 (RFM[1:0], PFM[1:0]). All formats require binary 2s-complement, MSB-first audio data. The default format is I^2S. Figure 26 shows a detailed timing diagram.

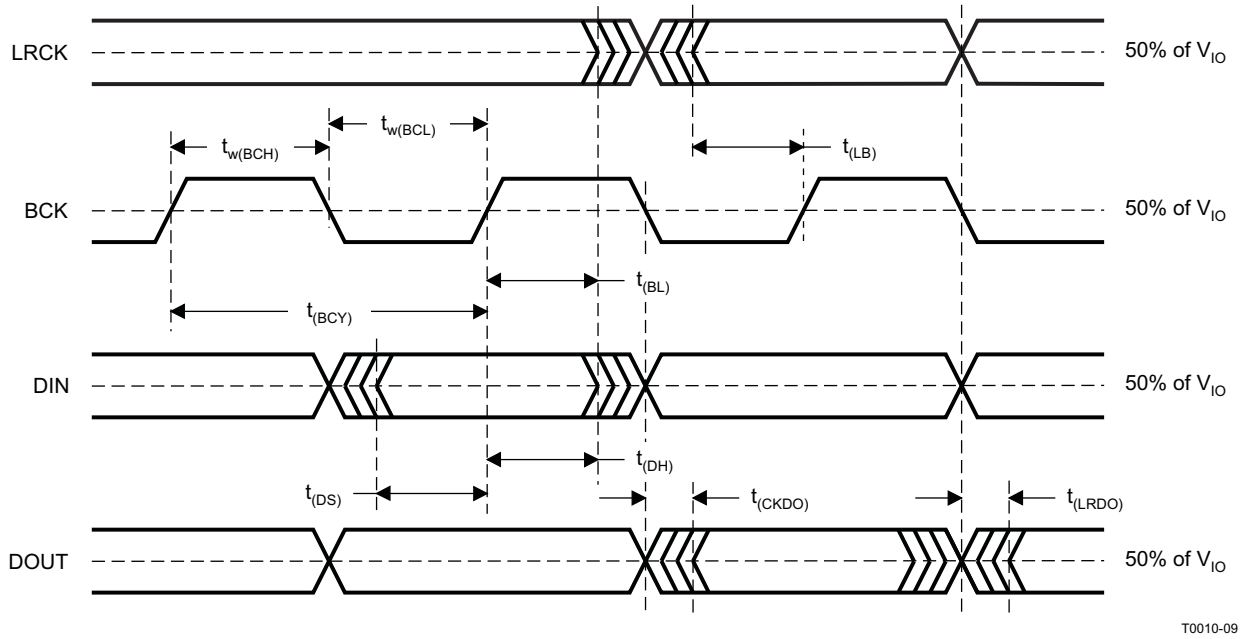

PARAMETERS		MIN	MAX	UNITS
$t_{(BCY)}$	BCK pulse cycle time (I^2S, left- and right-justified formats)	1/(64 f_S)(1)		
	BCK pulse cycle time (DSP format)	1/(256 f_S)(1)		
$t_{w(BCH)}$	BCK high-level time	35		ns
$t_{w(BCL)}$	BCK low-level time	35		ns
$t_{(BL)}$	BCK rising edge to LRCK edge	10		ns
$t_{(LB)}$	LRCK edge to BCK rising edge	10		ns
$t_{(DS)}$	DIN set up time	10		ns
$t_{(DH)}$	DIN hold time	10		ns
$t_{(CKDO)}$	DOUT delay time from BCK falling edge		15	ns
$t_{(LRDO)}$	DOUT delay time from LRCK falling edge		15	ns
t_r	Rising time of all signals		10	ns
t_f	Falling time of all signals		10	ns

(1) f_S is the sampling frequency.

Figure 26. Audio Interface Timing (Slave Mode)

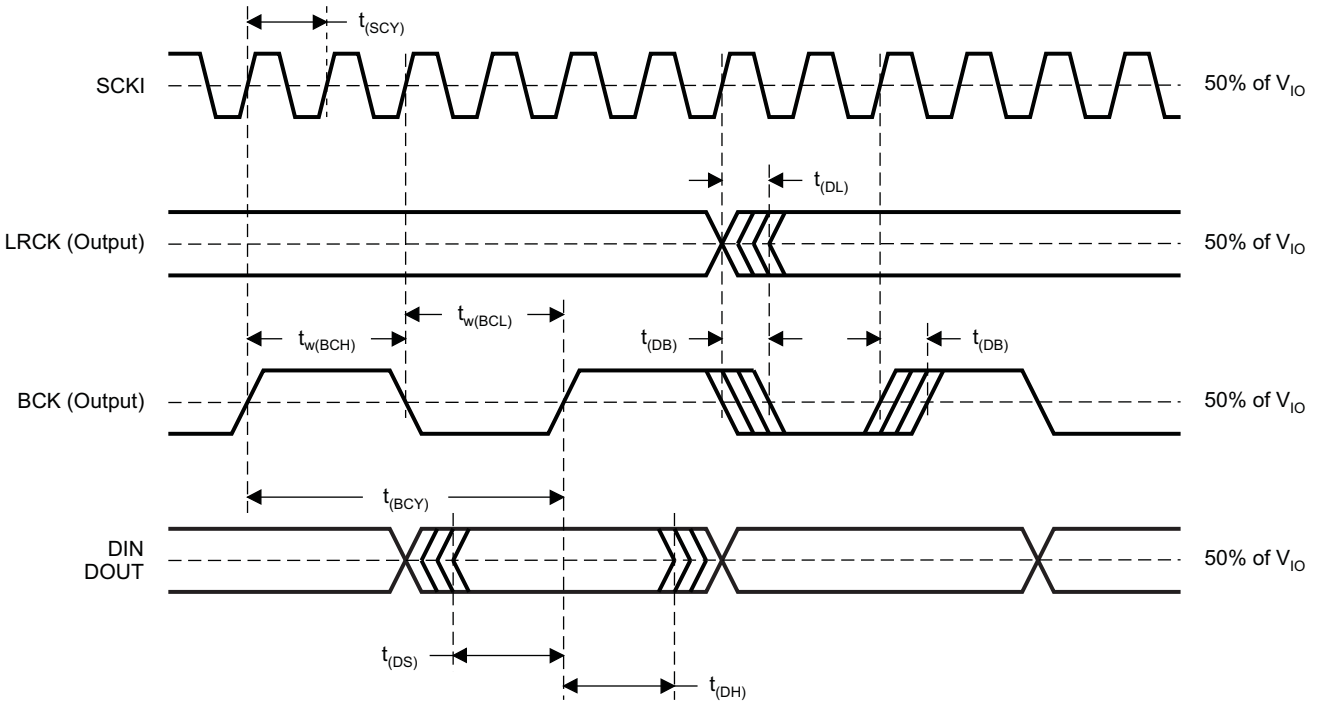

PARAMETERS		MIN	MAX	UNIT
$t_{(SCY)}$	SCKI pulse cycle time	1/(256 f_S)(1)		
$t_{(DL)}$	LRCK edge from SCKI rising edge	0	40	ns
$t_{(DB)}$	BCK edge from SCKI rising edge	0	40	ns
$t_{(BCY)}$	BCK pulse cycle time	1/(64 f_S)(1)		
$t_{w(BCH)}$	BCK high level time	146		ns
$t_{w(BCL)}$	BCK low level time	146		ns
$t_{(DS)}$	DATA setup time	10		ns
$t_{(DH)}$	DATA hold time	10		ns

(1) f_S is up to 48 kHz. f_S is the sampling frequency.

Figure 27. Audio Interface Timing (Master Mode)

(a) Right-Justified Data Format; L-Channel = HIGH, R-Channel = LOW

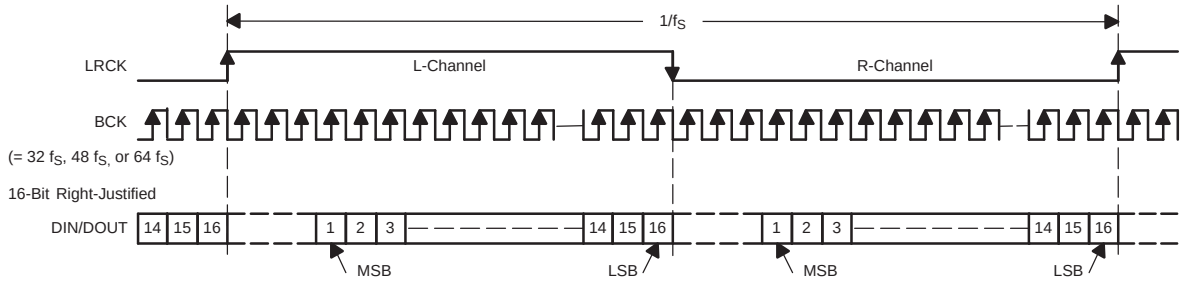

(b) I²S Data Format; L-Channel = LOW, R-Channel = HIGH

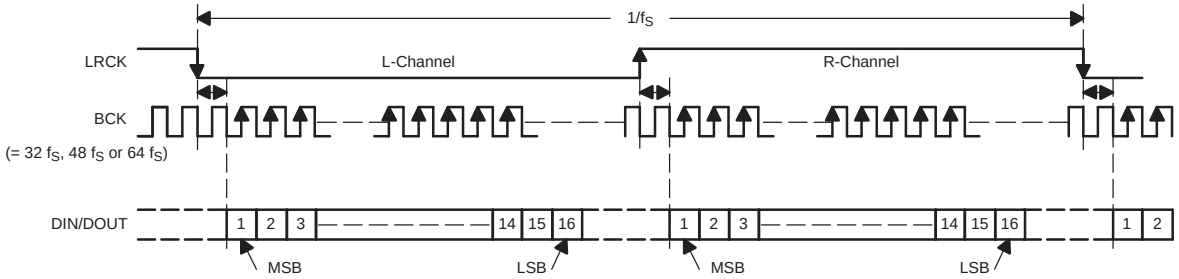

(c) Left-Justified Data Format; L-Channel = HIGH, R-Channel = LOW

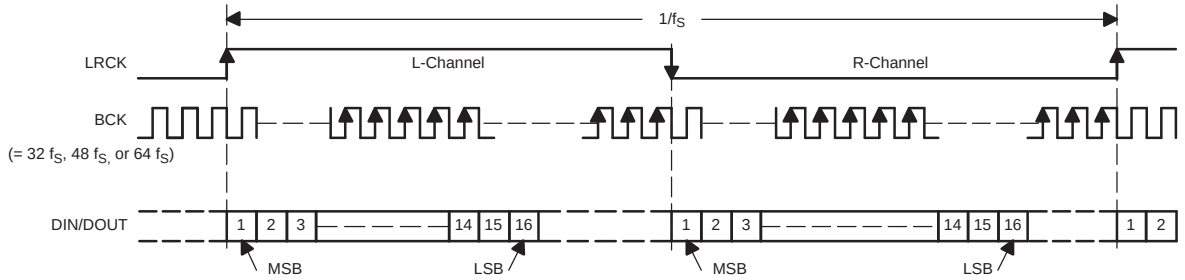

(d) Burst BCK Interface Format at Master Mode; L-Channel = HIGH, R-Channel = LOW

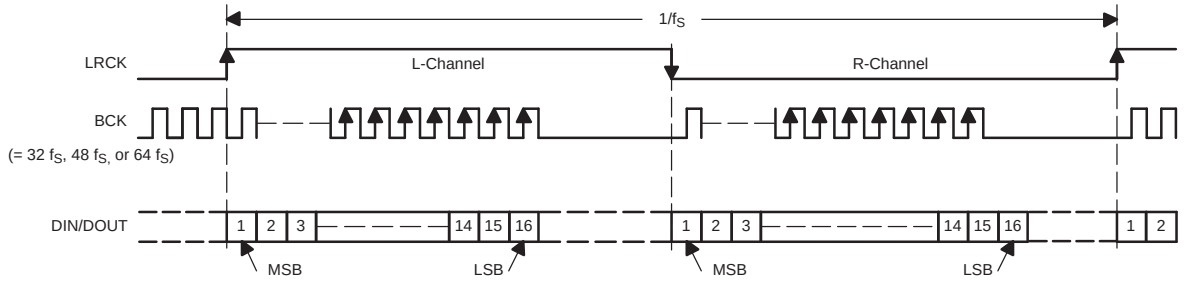

(e) DSP Format

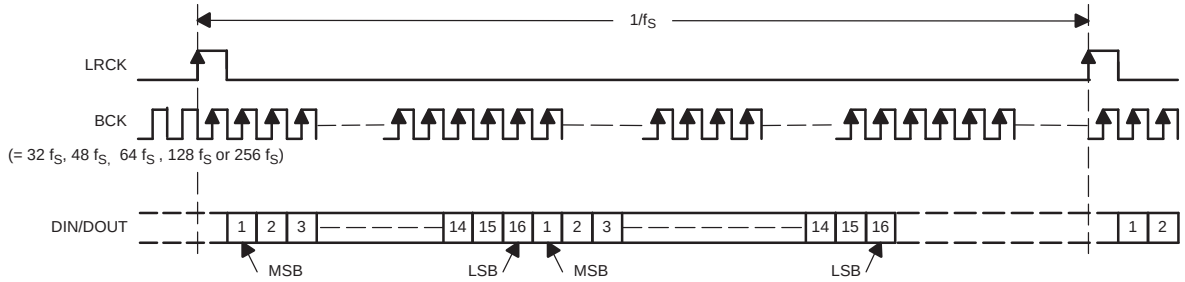

T0009-07

NOTE: All audio interface formats support BCK = 64 f_S in master mode (register 69, MSTR = 1). When setting the multisampling rate, the f_S of BCK is set to half the rate of the DSM operation frequency.

Figure 28. Audio Data Input and Output Formats

THREE-WIRE INTERFACE (SPI, MODE (PIN 28) = LOW)

All write operations for the serial control port use 16-bit data words. Figure 29 shows the control data word format. The most significant bit must be 0. There are seven bits, labeled IDX[6:0], that set the register address for the write operation. The least significant eight bits, D[7:0], contain the data to be written to the register specified by IDX[6:0].

Figure 30 shows the functional timing diagram for writing to the serial control port. To write the data into the mode register, the data is clocked into an internal shift register on the rising edge of the MC clock. The serial data should change on the falling edge of MC clock and should be LOW during write mode. The rising edge of MS should be aligned with the falling edge of the last MC clock pulse in the 16-bit frame. MC can run continuously between transactions while MS is in the LOW state.

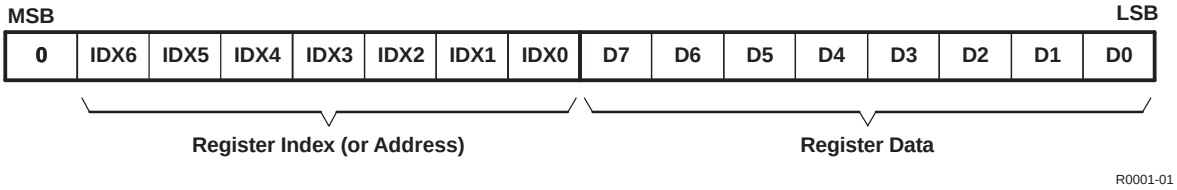

Figure 29. Control Data Word Format for MD

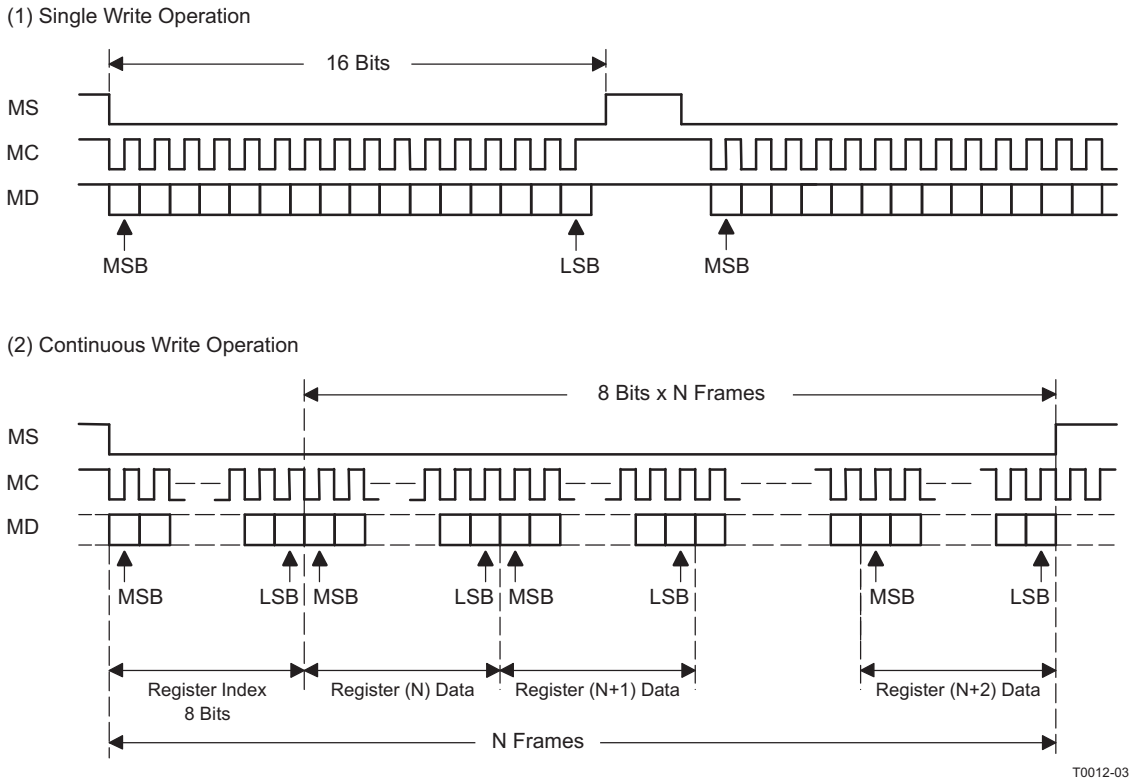

Figure 30. Register Write Operation

Three-Wire Interface (SPI) Timing Requirements

Figure 31 shows a detailed timing diagram for the serial control interface. These timing parameters are critical for proper control port operation.

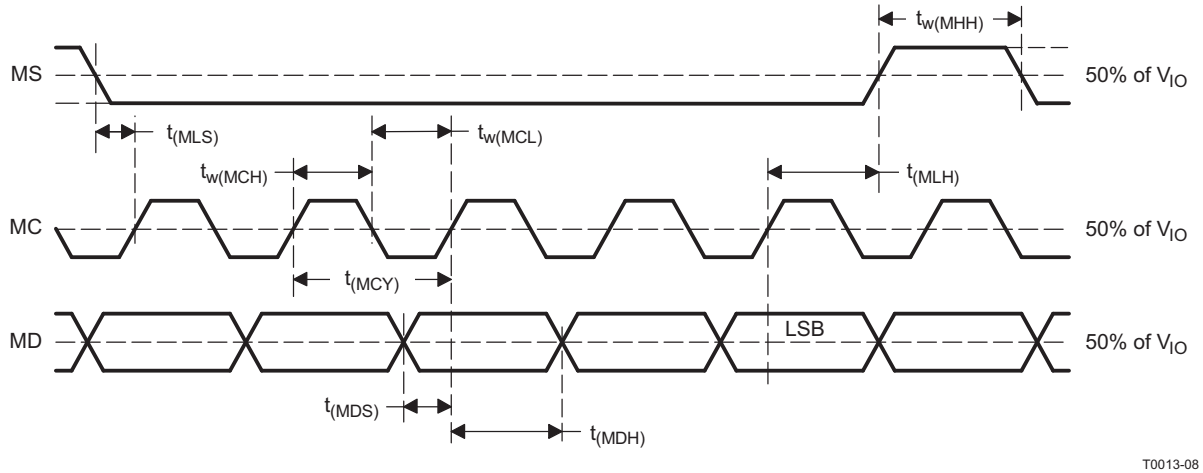

PARAMETERS		MIN	TYP	MAX	UNIT
$t_{(MCY)}$	MC pulse cycle time	500 (1)			ns
$t_{w(MCL)}$	MC low level time	50			ns
$t_{w(MCH)}$	MC high level time	50			ns
$t_{w(MHH)}$	MS high level time	(1)			ns
$t_{(MLS)}$	MS falling edge to MC rising edge	20			ns
$t_{(MLH)}$	MS hold time	20			ns
$t_{(MDH)}$	MD hold time	15			ns
$t_{(MDS)}$	MD setup time	20			ns

(1) 3/(128 f_S) s (min), where f_S is sampling rate.

Figure 31. SPI Interface Timing

TWO-WIRE INTERFACE [I²C, MODE (PIN 28) = HIGH]

The PCM3793/94 supports the I²C serial bus and the data transmission protocol for the I²C standard as a slave device. This protocol is explained in I²C specification 2.0.

In I²C mode, the control terminals are changed as follows.

TERMINAL NAME	PROPERTY	DESCRIPTION
MS/ADR	Input	I²C address
MD/SDA	Input/output	I²C data
MC/SCL	Input	I²C clock

SLAVE ADDRESS

MSB							LSB
1	0	0	0	1	1	ADR	R/$\overline{W}$

The PCM3793/94 has its own 7-bit slave address. The first six bits (MSBs) of the slave address are factory preset to 100011. The last bit of the address byte is the device select bit, which can be user-defined by the ADR terminal. A maximum of two PCM3793/94s can be connected on the same bus at one time. Each PCM3793/94 responds when it receives its own slave address.

Packet Protocol

The master device must control packet protocol, which consists of start condition, slave address with read/write bit, data if write or acknowledgement if read, and stop condition. The PCM3793/94 supports only slave receiver and slave transmitter.

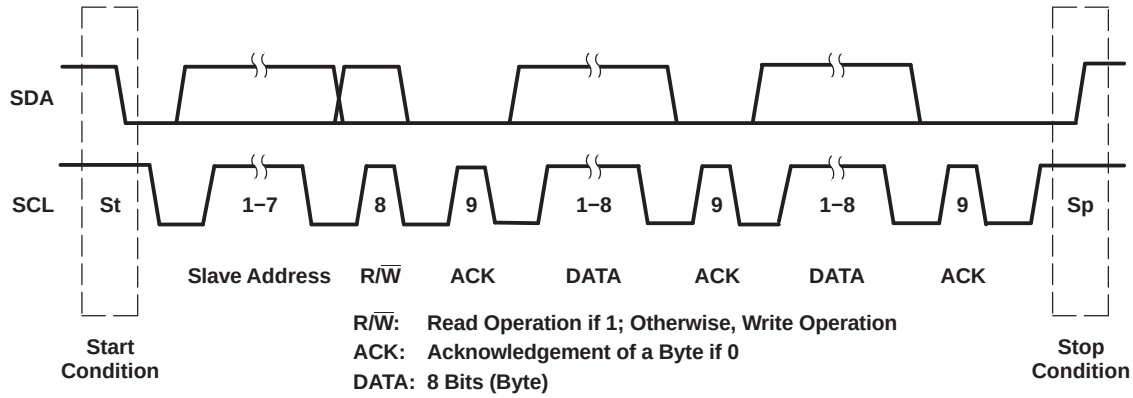

Write Operation

Transmitter	*M*	*M*	*M*	*S*	*M*	*S*	*M*	*S*	*M*
Data Type	St	Slave Address	R/$\overline{W}$	ACK	DATA	ACK	DATA	ACK	Sp

Read Operation

Transmitter	*M*	*M*	*M*	*S*	*S*	*M*	*S*	*M*	*M*
Data Type	St	Slave Address	R/$\overline{W}$	ACK	DATA	ACK	DATA	NACK	Sp

M: Master Device *S: Slave Device*
St: Start Condition Sp: Stop Condition

T0049-03

Figure 32. Basic I²C Framework

WRITE OPERATION

A master can write any PCM3793/94 registers using single access. The master sends a PCM3793/94 slave address with a write bit, a register address, and the data. When undefined registers are accessed, the PCM3793/94 does not send an acknowledgement. Figure 33 shows a diagram of the write operation.

Transmitter	*M*	*M*	*M*	*S*	*M*	*S*	*M*	*S*	*M*
Data Type	St	Slave Address	$\overline{W}$	ACK	Reg Address	ACK	Write Data	ACK	Sp

M: Master Device *S: Slave Device*
St: Start Condition $\overline{W}$: Write ACK: Acknowledge Sp: Stop Condition

R0002-01

Figure 33. Framework for Write Operation

READ OPERATION

A master can read the PCM3793/94 register. The value of the register address is stored in an indirect index register in advance. The master sends a PCM3793/94 slave address with a read bit after storing the register address. Then the PCM3793/94 transfers the data which the index register points to. Figure 34 shows a diagram of the write operation.

Transmitter	*M*	*M*	*M*	*S*	*M*	*S*	*M*	*M*	*M*	*S*	*S*	*M*	*M*
Data Type	St	Slave Address	$\overline{W}$	ACK	Reg Address	ACK	Sr	Slave Address	R	ACK	Read Data	NACK	Sp

M: Master Device *S: Slave Device* St: Start Condition
Sr: Repeated Start Condition ACK: Acknowledge Sp: Stop Condition NACK: Not Acknowledge
$\overline{W}$: Write R: Read

R0002-02

NOTE: The slave address after the repeated start condition must be the same as the previous slave address.

Figure 34. Read Operation

Timing Diagram

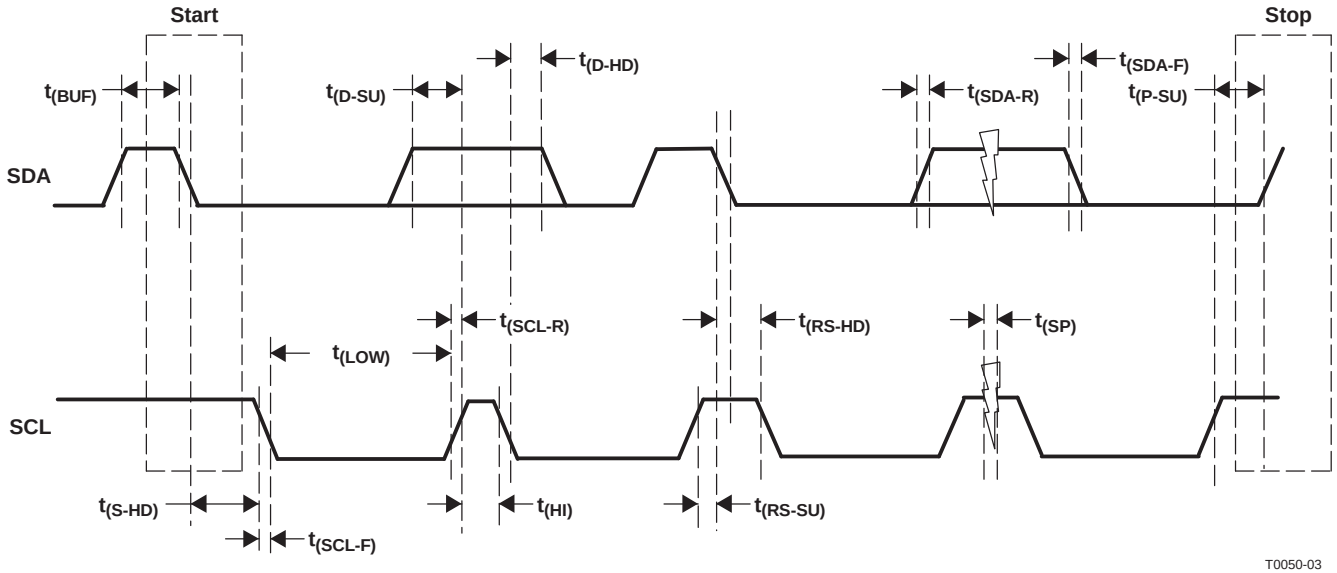

PARAMETERS		CONDITIONS	MIN	MAX	UNIT
f_{SCL}	SCL clock frequency	Standard		100	kHz
$t_{(BUF)}$	Bus free time between a STOP and START condition	Standard	4.7		µs
$t_{(LOW)}$	Low period of the SCL clock	Standard	4.7		µs
$t_{(HI)}$	High period of the SCL clock	Standard	4		µs
$t_{(RS-SU)}$	Setup time for START condition	Standard	4.7		µs
$t_{(S-HD)}$	Hold time for START condition	Standard	4		µs
$t_{(D-SU)}$	Data setup time	Standard	250		ns
$t_{(D-HD)}$	Data hold time	Standard	0	900	ns
$t_{(SCL-R)}$	Rise time of SCL signal	Standard	20 + 0.1 C_B	1000	ns
$t_{(SCL-R1)}$	Rise time of SCL signal after a repeated START condition and after an acknowledge bit	Standard	20 + 0.1 C_B	1000	ns
$t_{(SCL-F)}$	Fall time of SCL signal	Standard	20 + 0.1 C_B	1000	ns
$t_{(SDA-R)}$	Rise time of SDA signal	Standard	20 + 0.1 C_B	1000	ns
$t_{(SDA-F)}$	Fall time of SDA signal	Standard	20 + 0.1 C_B	1000	ns
$t_{(P-SU)}$	Setup time for STOP condition	Standard	4		µs
C_B	Capacitive load for SDA and SCL line			400	pF
$t_{(SP)}$	Pulse duration of suppressed spike			25	ns

Figure 35. I^2C Interface Timing

USER-PROGRAMMABLE MODE CONTROLS

Register Map

The mode control register map is shown in Table 6. Each register includes an index (or address) indicated by the IDX[6:0] bits.

Table 6. Mode Control Register Map

REGISTER	IDX[6:0] (B14–B8)	DESCRIPTION	B7	B6	B5	B4	B3	B2	B1	B0
Register 64	40h	Volume for HPA (L-ch)	RSV	HMUL	HLV5	HLV4	HLV3	HLV2	HLV1	HLV0
Register 65	41h	Volume for HPA (R-ch)	RSV	HMUR	HRV5	HRV4	HRV3	HRV2	HRV1	HRV0
Register 66	42h	Volume for SPA (L-ch)	RSV	SMUL	SLV5	SLV4	SLV3	SLV2	SLV1	SLV0
Register 67	43h	Volume for SPA (R-ch)	RSV	SMUR	SRV5	SRV4	SRV3	SRV2	SRV1	SRV0
Register 68	44h	DAC digital attenuation and soft mute (L-ch)	RSV	PMUL	ATL5	ATL4	ATL3	ATL2	ATL1	ATL0
Register 69	45h	DAC digital attenuation and soft mute (R-ch)	RSV	PMUR	ATR5	ATR4	ATR3	ATR2	ATR1	ATR0
Register 70	46h	DAC over sampling, de-emphasis, audio interface	DEM1	DEM0	PFM1	PFM0	RSV	RSV	RSV	OVER
Register 71	47h	SPA (class-D) switching frequency	RSV	RSV	RSV	SPSE	SPS1	SPS0	DFQ1	DFQ0
Register 72	48h	Analog mixer power up/down	RSV	RSV	RSV	RSV	RSV	RSV	PMXR	PMXL
Register 73	49h	DAC, SPA and HPA power up/down	PBIS	PDAR	PDAL	PHPC	PHPR	PHPL	PSPR	PSPL
Register 74	4Ah	Analog output configuration select	RSV	CMS2	CMS1	CMS0	HPS1	HPS0	SPKS	PCOM
Register 75	4Bh	HPA insertion detection, short/thermal protection	HPDP	HPDE	RSV	SDHC	SDHR	SDHL	SDSR	SDSL
Register 76	4Ch	SPA shutdown release	RSV	RSV	RSV	RSV	RSV	RSV	RLSR	RLSL
Register 77	4Dh	Shut down status read back	HPDS	RSV	RSV	STHC	STHR	STHL	STSR	STSL
Register 79	4Fh	Volume for ADC input (L-ch)	RSV	RSV	ALV5	ALV4	ALV3	ALV2	ALV1	ALV0
Register 80	50h	Volume for ADC input (R-ch)	RSV	RSV	ARV5	ARV4	ARV3	ARV2	ARV1	ARV0
Register 81	51h	ADC high-pass filter, soft mute, audio interface	HPF1	HPF0	RMUL	RMUR	RSV	DSMC	RFM1	RFM0
Register 82	52h	ADC, MCB, PG1, 2, 5, 6, D2S power up/down	RSV	RSV	PAIR	PAIL	PADS	PMCB	PADR	PADL
Register 83	53h	Automatic level control for recording	RALC	RSV	RRTC	RATC	RCP1	RCP0	RLV1	RLV0
Register 84	54h	Master mode	RSV	RSV	RSV	RSV	RSV	MSTR	RSV	BIT0
Register 85	55h	System reset, sampling rate control	SRST	RSV	NPR5	NPR4	NPR3	NPR2	NPR1	NPR0
Register 86	56h	BCK configuration, sampling rate control, zero-cross	MBST	MSR2	MSR1	MSR0	ATOD	RSV	RSV	ZCRS
Register 87	57h	Analog input select (MUX1, 2, 3, 4)	AD2S	RSV	AIR1	AIR0	RSV	RSV	AIL1	AIL0
Register 88	58h	Analog mixing switch (SW1, 2, 3, 4, 5, 6)	RSV	MXR2	MXR1	MXR0	RSV	MXL2	MXL1	MXL0
Register 89	59h	Analog to analog path (PG5, 6) gain	RSV	GMR2	GMR1	GMR0	RSV	GML2	GML1	GML0
Register 90	5Ah	V_{COM} power up/down, ramp up/down time, boost	RSV	RSV	CMT1	CMT0	RSV	RSV	G20R	G20L
Register 92	5Ch	Bass boost gain level	LPAE	RSV	RSV	LGA4	LGA3	LGA2	LGA1	LGA0
Register 93	5Dh	Middle boost gain level	RSV	RSV	RSV	MGA4	MGA3	MGA2	MGA1	MGA0
Register 94	5Eh	Treble boost gain level	RSV	RSV	RSV	HGA4	HGA3	HGA2	HGA1	HGA0
Register 95	5Fh	Sound effect source select, 3D sound	SDAS	3DEN	RSV	3FL0	3DP3	3DP2	3DP1	3DP0
Register 96	60h	2-stage notch filter, digital monaural mixing	NEN2	NEN1	NUP2	NUP1	RSV	RSV	RSV	MXEN
Register 97	61h	1st stage notch filter lower coefficient (a1)	F107	F106	F105	F104	F103	F102	F101	F100
Register 98	62h	1st stage notch filter upper coefficient (a1)	F115	F114	F113	F112	F111	F110	F109	F108
Register 99	63h	1st stage notch filter lower coefficient (a2)	F207	F206	F205	F204	F203	F202	F201	F200
Register 100	64h	1st stage notch filter upper coefficient (a2)	F215	F214	F213	F212	F211	F210	F209	F208
Register 101	65h	2nd stage notch filter lower coefficient (a1)	S107	S106	S105	S104	S103	S102	S101	S100
Register 102	66h	2nd stage notch filter upper coefficient (a1)	S115	S114	S113	S112	S111	S110	S109	S108
Register 103	67h	2nd stage notch filter lower coefficient (a2)	S207	S206	S205	S204	S203	S202	S201	S200
Register 104	68h	2nd stage notch filter upper coefficient (a2)	S215	S214	S213	S212	S211	S210	S209	S208

HPA: Headphone amplifier SPA: Speaker amplifier DAC: D/A converter ADC: A/D converter MCB: Microphone bias PGx: Analog input buffer D2S: Differential to single-ended amplifier

Register Definitions

	B15	B14	B13	B12	B11	B10	B9	B8	B7	B6	B5	B4	B3	B2	B1	B0
Register 64	0	IDX6	IDX5	IDX4	IDX3	IDX2	IDX1	IDX0	RSV	HMUL	HLV5	HLV4	HLV3	HLV2	HLV1	HLV0
Register 65	0	IDX6	IDX5	IDX4	IDX3	IDX2	IDX1	IDX0	RSV	HMUR	HRV5	HRV4	HRV3	HRV2	HRV1	HRV0

IDX[6:0]: 100 0000b (40h): Register 64

IDX[6:0]: 100 0001b (41h): Register 65

HMUL: Analog Mute Control for HPL (Line or Headphone L-Channel)

HMUR: Analog Mute Control for HPR (Line or Headphone R-Channel)

Default value: 1

HPOL/LOL and HPOR/LOR can be independently muted to zero level when HMUL and HMUR = 1. The HMUx mute takes precedence over analog volume level settings.

HMUL, HMUR = 0	Mute disabled
HMUL, HMUR = 1	Mute enabled (default)

HLV[5:0]: Analog Volume for HPL (Headphone L-Channel)

HRV[5:0]: Analog Volume for HPR (Headphone R-Channel)

Default value: 00 0000.

HPOL/LOL and HPOR/LOR can be independently controlled from 6 dB to –70 dB, with step size depending on the gain level. Outputs may have zipper noise while changing levels. In the PCM3793/94, the noise can be reduced when making the change by using zero-cross detection (register 85, ZCRS).

Table 7. Headphone Gain Level Setting

HLV[5:0], HRV[5:0]		STEP	GAIN LEVEL SETTING	HLV[5:0], HRV[5:0]		STEP	GAIN LEVEL SETTING	HLV[5:0], HRV[5:0]		STEP	GAIN LEVEL SETTING
11 1111	3F	0.5 dB	6 dB	10 1001	29	0.5 dB	–5 dB	01 0011	13	1 dB	–21 dB
11 1110	3E		5.5 dB	10 1000	28		–5.5 dB	01 0010	12		–22 dB
11 1101	3D		5 dB	10 0111	27		–6 dB	01 0001	11		–23 dB
11 1100	3C		4.5 dB	10 0110	26		–6.5 dB	01 0000	10		–24 dB
11 1011	3B		4 dB	10 0101	25		–7 dB	00 1111	0F	2 dB	–26 dB
11 1010	3A		3.5 dB	10 0100	24		–7.5 dB	00 1110	0E		–28 dB
11 1001	39		3 dB	10 0011	23		–8 dB	00 1101	0D		–30 dB
11 1000	38		2.5 dB	10 0010	22		–8.5 dB	00 1100	0C		–32 dB
11 0111	37		2 dB	10 0001	21		–9 dB	00 1011	0B		–34 dB
11 0110	36		1.5 dB	10 0000	20		–9.5 dB	00 1010	0A		–36 dB
11 0101	35		1 dB	01 1111	1F		–10 dB	00 1001	09		–38 dB
11 0100	34		0.5 dB	01 1110	1E		–10.5 dB	00 1000	08		–40 dB
11 0011	33		0 dB	01 1101	1D		–11 dB	00 0111	07		–42 dB
11 0010	32		–0.5 dB	01 1100	1C	1 dB	–12 dB	00 0110	06	4 dB	–46 dB
11 0001	31		–1 dB	01 1011	1B		–13 dB	00 0101	05		–50 dB
11 0000	30		–1.5 dB	01 1010	1A		–14 dB	00 0100	04		–54 dB
10 1111	2F		–2 dB	01 1001	19		–15 dB	00 0011	03		–58 dB
10 1110	2E		–2.5 dB	01 1000	18		–16 dB	00 0010	02		–62 dB
10 1101	2D		–3 dB	01 0111	17		–17 dB	00 0001	01		–66 dB
10 1100	2C		–3.5 dB	01 0110	16		–18 dB	00 0000	00		–70 dB
10 1011	2B		–4 dB	01 0101	15		–19 dB				
10 1010	2A		– 4.5 dB	01 0100	14		–20 dB				

	B15	B14	B13	B12	B11	B10	B9	B8	B7	B6	B5	B4	B3	B2	B1	B0
Register 66	0	IDX6	IDX5	IDX4	IDX3	IDX2	IDX1	IDX0	RSV	SMUL	SLV5	SLV4	SLV3	SLV2	SLV1	SLV0
Register 67	0	IDX6	IDX5	IDX4	IDX3	IDX2	IDX1	IDX0	RSV	SMUR	SRV5	SRV4	SRV3	SRV2	SRV1	SRV0

IDX[6:0]: 100 0010b (42h): Register 66

IDX[6:0]: 100 0011b (43h): Register 67

SMUL: Digital Soft Mute Control for SPL (Speaker Output, L-Channel)

SMUR: Digital Soft Mute Control for SPR (Speaker Output R-Channel)

Default value: 1

SPOLP/SPOLN and SPORP/SPORN can be independently muted to the zero level when HMUL and HMUR = 1. The SMUx mute takes precedence over analog volume level settings.

SMUL, SMUR = 0	Mute disabled
SMUL, SMUR = 1	Mute enabled (default)

SLV[5:0]: Gain Setting for SPL (Speaker Output L-Channel)

SRV[5:0]: Gain Setting for SPR (Speaker Output R-Channel)

Default value: 00 0000.

SPOLP/SPOLN and SPORP/SPORN can be independently controlled from 6 dB to –70 dB, with step size depending on the gain level. Outputs may have zipper noise while changing levels. In the PCM3793, the noise can be reduced when making the change by using zero-cross detection (register 85, ZCRS).

Table 8. Speaker Gain Level Setting

SLV[5:0], SRV[5:0]		STEP	GAIN LEVEL SETTING	SLV[5:0], SRV[5:0]		STEP	GAIN LEVEL SETTING	SLV[5:0], SRV[5:0]		STEP	GAIN LEVEL SETTING
11 1111	3F	0.5 dB	6 dB	10 1001	29	0.5 dB	–5 dB	01 0011	13	1 dB	–21 dB
11 1110	3E		5.5 dB	10 1000	28		–5.5 dB	01 0010	12		–22 dB
11 1101	3D		5 dB	10 0111	27		–6 dB	01 0001	11		–23 dB
11 1100	3C		4.5 dB	10 0110	26		–6.5 dB	01 0000	10		–24 dB
11 1011	3B		4 dB	10 0101	25		–7 dB	00 1111	0F	2 dB	–26 dB
11 1010	3A		3.5 dB	10 0100	24		–7.5 dB	00 1110	0E		–28 dB
11 1001	39		3 dB	10 0011	23		–8 dB	00 1101	0D		–30 dB
11 1000	38		2.5 dB	10 0010	22		–8.5 dB	00 1100	0C		–32 dB
11 0111	37		2 dB	10 0001	21		–9 dB	00 1011	0B		–34 dB
11 0110	36		1.5 dB	10 0000	20		–9.5 dB	00 1010	0A		–36 dB
11 0101	35		1 dB	01 1111	1F		–10 dB	00 1001	09		–38 dB
11 0100	34		0.5 dB	01 1110	1E		–10.5 dB	00 1000	08		–40 dB
11 0011	33		0 dB	01 1101	1D		–11 dB	00 0111	07		–42 dB
11 0010	32		–0.5 dB	01 1100	1C	1 dB	–12 dB	00 0110	06	4 dB	–46 dB
11 0001	31		–1 dB	01 1011	1B		–13 dB	00 0101	05		–50 dB
11 0000	30		–1.5 dB	01 1010	1A		–14 dB	00 0100	04		–54 dB
10 1111	2F		–2 dB	01 1001	19		–15 dB	00 0011	03		–58 dB
10 1110	2E		–2.5 dB	01 1000	18		–16 dB	00 0010	02		–62 dB
10 1101	2D		–3 dB	01 0111	17		–17 dB	00 0001	01		–66 dB
10 1100	2C		–3.5 dB	01 0110	16		–18 dB	00 0000	00		–70 dB
10 1011	2B		–4 dB	01 0101	15		–19 dB				
10 1010	2A		– 4.5 dB	01 0100	14		–20 dB				

	B15	B14	B13	B12	B11	B10	B9	B8	B7	B6	B5	B4	B3	B2	B1	B0
Register 68	0	IDX6	IDX5	IDX4	IDX3	IDX2	IDX1	IDX0	RSV	PMUL	ATL5	ATL4	ATL3	ATL2	ATL1	ATL0
Register 69	0	IDX6	IDX5	IDX4	IDX3	IDX2	IDX1	IDX0	RSV	PMUR	ATR5	ATR4	ATR3	ATR2	ATR1	ATR0

IDX[6:0]: 100 0100b (44h): Register 68

IDX[6:0]: 100 0101b (45h): Register 69

PMUL: Digital Soft Mute Control for DAL (DAC, L-Channel)

PMUR: Digital Soft Mute Control for DAR (DAC R-Channel)

Default value: 0

The digital input to the DAC can be independently muted or unmuted. The transition from the current volume level to mute, or the return to the previous volume setting from mute, occurs at the rate of one 1-dB step for each $8/f_S$ time period. When PMUL and PMUR = 0, the digital data is increased from mute to the previous attenuation level, and when PMUL and PMUR = 1, the digital data is decreased from the current attenuation level to mute. In the PCM3793/94, audible zipper noise can be reduced by using zero-cross detection (register 85, ZCRS).

PMUL, PMUR = 0	Mute disabled (default)
PMUL, PMUR = 1	Mute enabled

ATL[5:0]: Digital Attenuation Setting for DAL (L-Channel DAC)

ATR[5:0]: Digital Attenuation Setting for DAR (R-Channel DAC)

Default value: 11 1111b

The digital inputs to the DAC can be independently attenuated. The attenuation of each digital input is controlled in 1-dB step for every $8/f_S$ time period. Audible zipper noise in the PCM3793/94 can be reduced by changing the attenuation with zero-cross detection (register 85, ZCRS).

Table 9. Digital Attenuation Setting

ATL[5:0], ATR[5:0]		ATTENUATION LEVEL SETTING	ATL[5:0], ATR[5:0]		ATTENUATION LEVEL SETTING	ATL[5:0], ATR[5:0]		ATTENUATION LEVEL SETTING
11 1111	3F	0 dB (default)	10 1001	29	–22 dB	01 0011	13	–44 dB
11 1110	3E	–1 dB	10 1000	28	–23 dB	01 0010	12	–45 dB
11 1101	3D	–2 dB	10 0111	27	–24 dB	01 0001	11	–46 dB
11 1100	3C	–3 dB	10 0110	26	–25 dB	01 0000	10	–47 dB
11 1011	3B	–4 dB	10 0101	25	–26 dB	00 1111	0F	–48 dB
11 1010	3A	–5 dB	10 0100	24	–27 dB	00 1110	0E	–49 dB
11 1001	39	–6 dB	10 0011	23	–28 dB	00 1101	0D	–50 dB
11 1000	38	–7 dB	10 0010	22	–29 dB	00 1100	0C	–51 dB
11 0111	37	–8 dB	10 0001	21	–30 dB	00 1011	0B	–52 dB
11 0110	36	–9 dB	10 0000	20	–31 dB	00 1010	0A	–53 dB
11 0101	35	–10 dB	01 1111	1F	–32 dB	00 1001	09	–54 dB
11 0100	34	–11 dB	01 1110	1E	–33 dB	00 1000	08	–55 dB
11 0011	33	–12 dB	01 1101	1D	–34 dB	00 0111	07	–56 dB
11 0010	32	–13 dB	01 1100	1C	–35 dB	00 0110	06	–57 dB
11 0001	31	–14 dB	01 1011	1B	–36 dB	00 0101	05	–58 dB
11 0000	30	–15 dB	01 1010	1A	–37 dB	00 0100	04	–59 dB
10 1111	2F	–16 dB	01 1001	19	–38 dB	00 0011	03	–60 dB
10 1110	2E	–17 dB	01 1000	18	–39 dB	00 0010	02	–61 dB
10 1101	2D	–18 dB	01 0111	17	–40 dB	00 0001	01	–62 dB
10 1100	2C	–19 dB	01 0110	16	–41 dB	00 0000	00	Mute
10 1011	2B	–20 dB	01 0101	15	–42 dB			
10 1010	2A	–21 dB	01 0100	14	–43 dB			

	B15	B14	B13	B12	B11	B10	B9	B8	B7	B6	B5	B4	B3	B2	B1	B0
Register 70	0	IDX6	IDX5	IDX4	IDX3	IDX2	IDX1	IDX0	DEM1	DEM0	PFM1	PFM0	RSV	RSV	RSV	OVER

IDX[6:0]: 100 0110b (46h): Register 70

DEM[1:0]: De-Emphasis Filter Selection

Default value: 00

The digital de-emphasis filter is in front of the interpolation filter. One of three de-emphasis filters can be selected, corresponding to sampling rate, 32 kHz, 44.1 kHz, or 48 kHz.

DEM[1:0]	De-Emphasis Filter Selection
00	OFF (default)
01	32 kHz
10	44.1 kHz
11	48 kHz

PFM[1:0]: Audio Interface Selection for DAC (Digital Input)

Default value: 00

The audio interface for the DAC digital input has I^2S, right-justified, left-justified, and DSP formats.

PFM[1:0]	Audio Interface Selection for DAC Digital Input
00	I^2S format (default)
01	Right-justified format
10	Left-justified format
11	DSP format

OVER: Oversampling Control for Delta-Sigma DAC

Default value: 0

This bit is used to control the oversampling rate of delta-sigma DAC. When the PCM3793/94 operates at low sampling rates, less than 24 kHz with SCKI frequency less than 12.5 MHz, using this function with OVER = 1 is recommended.

OVER = 0	128 f_S (default)
OVER = 1	192 f_S, 256 f_S, 384 f_S

	B15	B14	B13	B12	B11	B10	B9	B8	B7	B6	B5	B4	B3	B2	B1	B0
Register 71	0	IDX6	IDX5	IDX4	IDX3	IDX2	IDX1	IDX0	RSV	RSV	RSV	SPSE	SPS1	SPS0	DFQ1	DFQ0

IDX[6:0]: 100 0111b (47h): Register 71

SPSE: Enable of Spectrum Spreading

Default value: 0

The class-D speaker amplifier output can cause RF interference due to switching noise. The PCM3793 can reduce peak noise by the use of spectrum spreading technology when SPSE = 1.

SPSE = 0	Disable (default)
SPSE = 1	Enable

SPS[1:0]: Spectrum Spreading Efficiency

Default value: 00

The efficiency of spectrum spreading technology can be changed to low, medium, or high.

SPS[1:0]	**Spectrum Spreading Efficiency**
00	Low (default)
01	Medium
10	High
11	Reserved

DFQ[1:0]: Switching Frequency for Speaker Amplifier (Class-D)

Default value: 00

Switching frequency for the class-D speaker amplifier can be selected to avoid interference with other equipment.

DFQ[1:0]	**Class D Amplifier Switching Frequency**
00	1.5 MHz (default)
01	2.25 MHz
10	2.65 MHz
11	3 MHz

	B15	B14	B13	B12	B11	B10	B9	B8	B7	B6	B5	B4	B3	B2	B1	B0
Register 72	0	IDX6	IDX5	IDX4	IDX3	IDX2	IDX1	IDX0	RSV	RSV	RSV	RSV	RSV	RSV	PMXR	PMXL

IDX[6:0]: 100 1000b (48h) Register 72

PMXR: Power Up/Down for MXR (Mixer R-Channel)

PMXL: Power Up/Down for MXL (Mixer L-Channel)

Default value: 0

These bits are used to control power up and down for the analog mixer.

PMXL, PMXR = 0	Power down (default)
PMXL, PMXR = 1	Power up

	B15	B14	B13	B12	B11	B10	B9	B8	B7	B6	B5	B4	B3	B2	B1	B0
Register 73	0	IDX6	IDX5	IDX4	IDX3	IDX2	IDX1	IDX0	PBIS	PDAR	PDAL	PHPC	PHPR	PHPL	PSPR	PSPL

IDX[6:0]: 100 1001b (49h): Register 73

PBIS: Power Up/Down Control for Bias

Default value: 0

This bit is used to control power up/down for the analog bias circuit.

PBIS = 0	Power down (default)
PBIS = 1	Power up

PDAR: Power Up/Down Control for DAR (DAC and R-Channel Digital Filter)

PDAL: Power Up/Down Control for DAL (DAC and L-Channel Digital Filter)

Default value: 0

This bit is used to control power up/down for the DAC and interpolation filter.

PDAR, PDAL = 0	Power down (default)
PDAR, PDAL = 1	Power up

PHPC: Power Up/Down Control for HPC (Headphone COM/Monaural Output)

Default value: 0

This bit is used to control power up/down for the headphone COM or monaural line amplifier.

PHPC = 0	Power down (default)
PHPC = 1	Power up

PHPR: Power Up/Down Control for HPR (Line or R-Channel Headphone Output)

PHPL: Power Up/Down Control for HPL (Line or L-Channel Headphone Output)

Default value: 0

This bit is used to control power up/down for the headphone amplifier.

PHPR, PHPL = 0	Power down (default)
PHPR, PHPL = 1	Power up

PSPR: Power Up/Down Control for SPR (R-Channel Speaker Output, PCM3793)

PSPL: Power Up/Down Control for SPL (L-Channel Speaker Output, PCM3793)

Default value: 0

This bit is used to control power up/down for the PCM3793 speaker amplifier. This bit is should be set to 0 for the PCM3794, because it has no speaker outputs.

PSPR, PSPL = 0	Power down (default)
PSPR, PSPL = 1	Power up

	B15	B14	B13	B12	B11	B10	B9	B8	B7	B6	B5	B4	B3	B2	B1	B0
Register 74	0	IDX6	IDX5	IDX4	IDX3	IDX2	IDX1	IDX0	RSV	CMS2	CMS1	CMS0	HPS1	HPS0	SPKS	PCOM

IDX[6:0]: 100 1010b (4Ah): Register 74

CMS[2:0]: Output Selection for HPC (Headphone COM/Monaural Output)

Default value: 000

HPCOM/MONO output can be selected from several input analog sources, including inverted HPOR output, inverted HPOL output, and monaural output.

CMS[2:0]	HPCOM/MONO Output Selection
0 0 0	Common voltage (0.5 V_{CC}) output for capless mode (default)
0 0 1	Monaural output
0 1 0	Inverted HPOL output
1 0 0	Inverted HPOR output
Others	Reserved

HPS[1:0]: Line or Headphone Output Configuration

Default value: 00

The HPOL/LOL and HPOR/LOR output configuration can be selected as follows.

HPS[1:0]	Line or Headphone Output Configuration
0 0	Stereo output (default)
0 1	Single monaural output
1 0	Differential monaural output
1 1	Reserved

SPKS: Speaker Output Configuration

Default value: 00

The SPOLP/SPOLN and SPORP/SPORN output configuration can be selected as follows.

SPKS = 0	Stereo output (default)
SPKS = 1	Monaural output

PCOM: Power Up/Down Control for V_{COM}

Default value: 0

This bit is used to control power up/down for V_{COM}.

PCOM = 0	Power down (default)
PCOM = 1	Power up

	B15	B14	B13	B12	B11	B10	B9	B8	B7	B6	B5	B4	B3	B2	B1	B0
Register 75	0	IDX6	IDX5	IDX4	IDX3	IDX2	IDX1	IDX0	HPDP	HPDE	RSV	SDHC	SDHR	SDHL	SDSR	SDSL

IDX[6:0]: 1001011b (4Bh): Register 75

HPDP: Headphone Insertion Detection Polarity

HPDE: Enable for Headphone Insertion Detection

Default value: 0

Table 10. Headphone Insertion Detection

HPDE	HPDP	HDTI (PIN 8)	HP OUTPUT	SP OUTPUT
1	0	0	Down	Up
1	0	1	Up	Down
1	1	0	Up	Down
1	1	1	Down	Up
0	X	X	Headphone insertion detection disabled	

SDHC: Short Protection Disable for HPC (Headphone COM/Monaural Output)

SDHR: Short Protection Disable for HPR (R-Channel Headphone)

SDHL: Short Protection Disable for HPL (L-Channel Headphone)

Default value: 0

Short-circuit protection can be disabled if this function is not needed in an application.

SDHC, SDHR, SDHL = 0	Enabled (default)
SDHC, SDHR, SDHL = 1	Disabled

SDSR: Thermal Protection Disable for SPR (Speaker Amplifier R-Channel)

SDSL: Thermal Protection Disable for SPL (Speaker Amplifier L-Channel)

Default value: 0

The thermal protection circuit can be disabled if this function is not needed in an application.

SDSR, SDSL = 0	Enabled (default)
SDSR, SDSL = 1	Disabled

	B15	B14	B13	B12	B11	B10	B9	B8	B7	B6	B5	B4	B3	B2	B1	B0
Register 76	0	IDX6	IDX5	IDX4	IDX3	IDX2	IDX1	IDX0	RSV	RSV	RSV	RSV	RSV	RSV	RLSR	RLSL

IDX[6:0]: 100 1100b (4Ch): Register 76

RLSR: Reset Thermal Protection Circuit for SPR (R-Channel Speaker Amplifier)

RLSL: Reset Thermal Protection Circuit for SPL (L-Channel Speaker Amplifier)

Default value: 0

Short-circuit protection puts the device in power-down status after it detects a temperature of approximately 150°C on the die. These bits must be set to 1 to restore power to the speaker amplifier.

RLSR, RLSL = 0	Operation (default)
RLSR, RLSL = 1	Reset (set to 0 automatically after being set to 1)

	B15	B14	B13	B12	B11	B10	B9	B8	B7	B6	B5	B4	B3	B2	B1	B0
Register 77	0	IDX6	IDX5	IDX4	IDX3	IDX2	IDX1	IDX0	HPDS	RSV	RSV	STHC	STHR	STHL	STSR	STSL

IDX[6:0]: 100 1101b (4Dh): Register 77

HPDS: Headphone Detection Status

Default value: 0

The HPDS bit shows the status of insert detection for the headphone. This is a read-only bit. The polarity depends on register 75 HPDP setting.

HPDS = 0	HDTI input (when HPDP = 0) (default)
HPDS = 1	Inverted HDTI input (When HPDP = 1)

STHC: Short Protection Status for HPC (Headphone COM/Monaural Output)

STHR: Short Protection Status for HPR (R-Channel Headphone)

STHL: Short Protection Status for HPL (L-Channel Headphone)

These bits can be read through the I^2C interface to determine short protection status.

STHC, STHR, STHL = 0	Detect short circuit
STHC, STHR, STHL = 1	Not detect short circuit

STSR: Thermal Protection Status for SPR (R-Channel Speaker)

STSL: Thermal Protection Status for SPL (L-Channel Speaker)

These bits can be read through the I^2C interface to determine thermal protection status.

STSR, STSL = 0	Detect thermal protection
STSR, STSL = 1	Not detect thermal protection

	B15	B14	B13	B12	B11	B10	B9	B8	B7	B6	B5	B4	B3	B2	B1	B0
Register 79	0	IDX6	IDX5	IDX4	IDX3	IDX2	IDX1	IDX0	RSV	RSV	ALV5	ALV4	ALV3	ALV2	ALV1	ALV0
Register 80	0	IDX6	IDX5	IDX4	IDX3	IDX2	IDX1	IDX0	RSV	RSV	ARV5	ARV4	ARV3	ARV2	ARV1	ARV0

IDX[6:0]: 100 1111b (4Fh): Register 79

IDX[6:0]: 101 0000b (50h): Register 80

ALV[5:0]: Gain Control for PG3 (R-Channel ADC Analog Input)

ARV[5:0]: Gain Control for PG4 (L-Channel ADC Analog Input)

Default value: 00

PG3 and PG4 can be independently controlled for ADC input from 30 dB to –12 dB in 1-dB steps. The ADC output may have zipper noise while changing the level. In the PCM3793/94, the noise can be reduced when making the change by using zero-cross detection (register 85, ZCRS).

Table 11. Gain Level Setting

ALV[5:0], ARV[5:0]		GAIN LEVEL SETTING	ALV[5:0], ARV[5:0]		GAIN LEVEL SETTING
10 1010	2A	30 dB	01 0100	14	8 dB
10 1001	29	29 dB	01 0011	13	7 dB
10 1000	28	28 dB	01 0010	12	6 dB
10 0111	27	27 dB	01 0001	11	5 dB
10 0110	26	26 dB	01 0000	10	4 dB
10 0101	25	25 dB	00 1111	0F	3 dB
10 0100	24	24 dB	00 1110	0E	2 dB
10 0011	23	23 dB	00 1101	0D	1 dB
10 0010	22	22 dB	00 1100	0C	0 dB
10 0001	21	21 dB	00 1011	0B	–1 dB
10 0000	20	20 dB	00 1010	0A	–2 dB
01 1111	1F	19 dB	00 1001	09	–3 dB
01 1110	1E	18 dB	00 1000	08	–4 dB
01 1101	1D	17 dB	00 0111	07	–5 dB
01 1100	1C	16 dB	00 0110	06	–6 dB
01 1011	1B	15 dB	00 0101	05	–7 dB
01 1010	1A	14 dB	00 0100	04	–8 dB
01 1001	19	13 dB	00 0011	03	–9 dB
01 1000	18	12 dB	00 0010	02	–10 dB
01 0111	17	11 dB	00 0001	01	–11 dB
01 0110	16	10 dB	00 0000	00	–12 dB (default)
01 0101	15	9 dB			

	B15	B14	B13	B12	B11	B10	B9	B8	B7	B6	B5	B4	B3	B2	B1	B0
Register 81	0	IDX6	IDX5	IDX4	IDX3	IDX2	IDX1	IDX0	HPF1	HPF0	RMUL	RMUR	RSV	DSMC	RFM1	RFM0

IDX[6:0]: 101 0001b (51h): Register 81

HPF[1:0]: High-Pass Filter Selection

Default value: 00

PCM3793/94 has digital high-pass filter to remove dc voltage at the input of the ADC. The cutoff frequency of the high-pass filter can be selected.

HPF [1:0]	High-Pass Filter Selection
0 0	f_C = 4 Hz at 48 kHz (default)
0 1	f_C = 240 Hz at 48 kHz
1 0	Reserved
1 1	High-pass filter disabled

RMUL: Digital Soft Mute Control for L-Channel ADC

RMUR: Digital Soft Mute Control for R-Channel ADC

Default value: 1

The digital output of the ADC can be independently muted or unmuted. The transition from the current volume level to mute, or the return to the previous volume setting from mute, occurs at the rate of one 1-dB step for each $8/f_S$ time period. When PMUL and PMUR = 0, the digital data is increased from mute to the previous attenuation level, and when PMUL and PMUR = 1, the digital data is decreased from the current attenuation level to mute. In the PCM3793/94, audible zipper noise can be reduced by using zero-cross detection (register 85, ZCRS).

RMUL, RMUR = 0	Mute disabled
RMUL, RMUR = 1	Mute enabled (default)

DSMC: Waiting Time for ADC Mute Off at Power Up

Default value: 0

The ADC digital output has an optional delay after power up when DSMC = 0. It is recommended to set DSMC = 0.

DSMC = 0	10 ms at 48 kHz (default)
DSMC = 1	No delay

RFM[1:0]: Audio Interface Selection for ADC (Digital Output)

Default value: 00

The audio interface for the ADC digital input supports I^2S, right-justified, left-justified, and DSP formats.

RFM [1:0]	Audio Interface Selection for ADC Digital Output
0 0	I^2S format (default)
0 1	Right-justified format
1 0	Left-justified format
1 1	DSP format

	B15	B14	B13	B12	B11	B10	B9	B8	B7	B6	B5	B4	B3	B2	B1	B0
Register 82	0	IDX6	IDX5	IDX4	IDX3	IDX2	IDX1	IDX0	RSV	RSV	PAIR	PAIL	PADS	PMCB	PADR	PADL

IDX[6:0]: 101 0010b (52h): Register 82

PAIR: Power Up/Down for PG2 and PG6 (Gain Amplifier for R-Channel Analog Input)

PAIL: Power Up/Down for PG1 and PG5 (Gain Amplifier for L-Channel Analog Input)

Default value: 0

This bit is used to control power up/down for PG2 and PG6 (gain amplifier for analog input).

PAIR, PAIL = 0	Power down (default)
PAIR, PAIL = 1	Power up

PADS: Power Up/Down for D2S (Differential Amplifier) of AIN1L and AIN1R

Default value: 0

This bit is used to control power up/down for D2S (differential-to-single amplifier).

PADS = 0	Power down (default)
PADS = 1	Power up

PMCB: Power Up/Down Control for Microphone Bias Source

Default value: 0

This bit is used to control power up/down for the microphone bias source.

PMCB = 0	Power down (default)
PMCB = 1	Power up

PADR: Power Up/Down Control for ADR (ADC and R-Channel Digital Filter)

PADL: Power Up/Down Control for ADL (ADC and L-Channel Digital Filter)

Default value: 0

This bit is used to control power up/down for the ADC and decimation filter.

PADR, PADL = 0	Power down (default)
PADR, PADL = 1	Power up

	B15	B14	B13	B12	B11	B10	B9	B8	B7	B6	B5	B4	B3	B2	B1	B0
Register 83	0	IDX6	IDX5	IDX4	IDX3	IDX2	IDX1	IDX0	RALC	RSV	RRTC	RATC	RCP1	RCP0	RLV1	RLV0

IDX[6:0]: 101 0011b (53h): Register 83

RALC: Automatic Level Control (ALC) Enable for Recording

Default value: 0

Automatic level control can be enabled with some parameters for microphone input or lower analog source level.

RALC = 0	Disable (default)
RALC = 1	Enable

RRTC: ALC Recovery Time Control for Recording

Default value: 0

This bit is used to select the recovery time for the ALC. The response is shown in Figure 36.

RRTC = 0	3.4 s (default)
RRTC = 1	13.6 s

RATC: ALC Attack Time Control for Recording

Default value: 0

This bit is used to select the attack time for the ALC. The response is shown in Figure 36.

RATC = 0	1 ms (default)
RATC = 1	2 ms

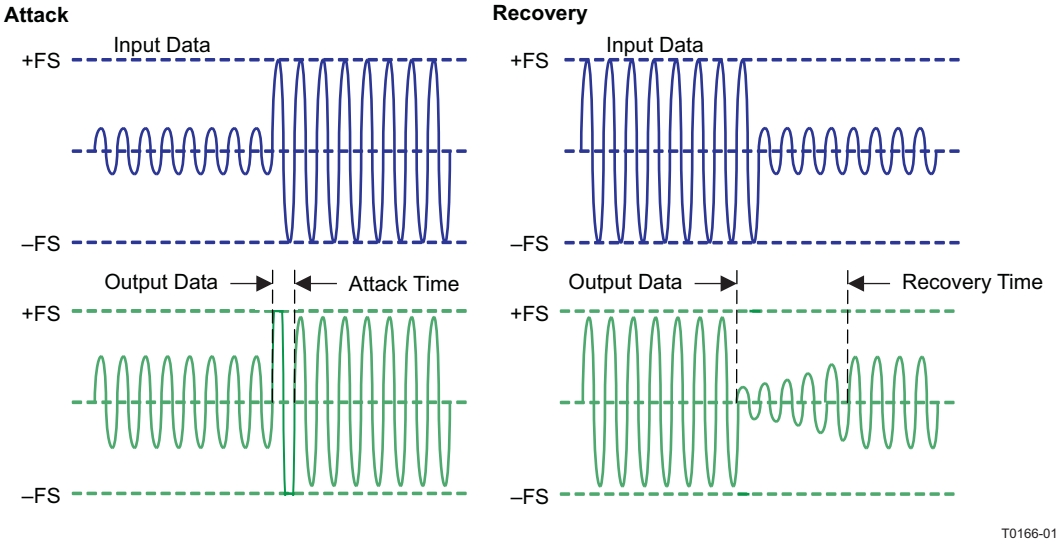

Figure 36. Attack and Recovery Time Response

RCP[1:0]: ALC Compression Level Control for Recording

Default value: 00

These bits are used to set the compression level for the ALC. The characteristic is shown in Figure 37.

RCP[1:0]	ALC Compression Level Control for Recording
0 0	–2 dB (default)
0 1	–6 dB
1 0	–12 dB
1 1	Reserved

RLV[1:0]: ALC Expansion Level Control for Recording

Default value: 00

These bits are used to set the expansion level for the ALC. The characteristic is shown in Figure 37.

RLV[1:0]	ALC Gain Level Control for Recording
0 0	0 dB (default)
0 1	6 dB
1 0	14 dB
1 1	24 dB

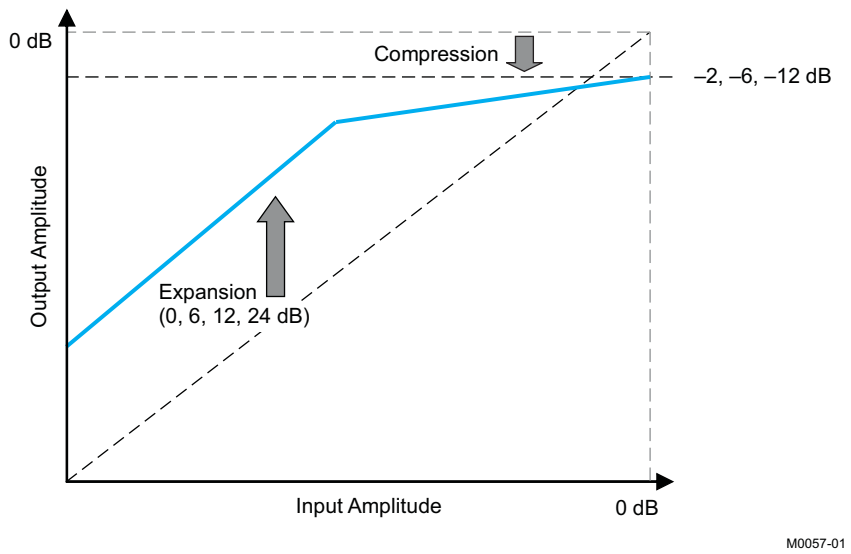

Figure 37. Compression and Expansion Characteristics

	B15	B14	B13	B12	B11	B10	B9	B8	B7	B6	B5	B4	B3	B2	B1	B0
Register 84	0	IDX6	IDX5	IDX4	IDX3	IDX2	IDX1	IDX0	RSV	RSV	RSV	RSV	RSV	MSTR	RSV	BIT0
Register 85	0	IDX6	IDX5	IDX4	IDX3	IDX2	IDX1	IDX0	SRST	RSV	NPR5	NPR4	NPR3	NPR2	NPR1	NPR0
Register 86	0	IDX6	IDX5	IDX4	IDX3	IDX2	IDX1	IDX0	MBST	MSR2	MSR1	MSR0	ATOD	RSV	RSV	ZCRS

IDX[6:0]: 101 0100b (54h): Register 84

IDX[6:0]: 101 0101b (55h): Register 85

IDX[6:0]: 101 0110b (56h): Register 86

MSTR: Master or Slave Selection for Audio Interface

Default value: 0

This bit is used to select either master or slave mode for the audio interface. In master mode, the PCM3793/94 generates LRCK and BCK from the system clock. In slave mode, it receives LRCK and BCK from another device.

MSTR = 0	Slave interface (default)
MSTR = 1	Master interface

BIT0: Bit Length Selection for Audio Interface

Default value: 1

This bit is used to select the data bit length for DAC input.

BIT0 = 0	Reserved
BIT0 = 1	16 bits (default)

SRST: System Reset

Default value: 0

This bit is used to enable system reset. All circuits are reset by setting SRST = 1. After completing the reset sequence, SRST is set to 0 automatically.

SRST = 0	Reset disabled (default)
SRST = 1	Reset enabled

NPR[5:0]: System Clock Rate Selection

Default value: 000000

MSR[2:0]: System Clock Dividing Rate Selection in Master Mode (Register 70)

Default value: 000

These bits are used to select the system clock rate and the dividing rate of the input system clock. See Table 12 for the details.

Table 12. System Clock Frequency for Common-Audio Clock

SYSTEM CLOCK SCK (MHz)	ADC SAMPLING RATE ADC f_S (kHz)	DAC SAMPLING RATE DAC f_S (kHz)	REGISTER SETTINGS(1)		BIT CLOCK BCK (f_S)
			MSR[2:0]	NPR[5:0]	
6.144	24 (SCK/256)		010	00 0000	64
	16 (SCK/384)		011	00 0000	64
	12 (SCK/512)		100	00 0000	64
	8 (SCK/768)		101	00 0000	64
	6 (SCK/1024)		110	00 0000	64
	4 (SCK/1536)		111	00 0000	64
8.192	32 (SCK/256)		010	00 0000	64
	16 (SCK/512)		100	00 0000	64
	8 (SCK/1024)		110	00 0000	64
12.288	48 (SCK/256)		010	00 0000	64
	32 (SCK/384)		011	00 0000	64
	24 (SCK/512)		100	00 0000	64
	16 (SCK/768)		101	00 0000	64
	12 (SCK/1024)		110	00 0000	64
	8 (SCK/1536)		111	00 0000	64
18.432	48 (SCK/384)		011	00 0000	64
	24 (SCK/768)		101	00 0000	64
	12 (SCK/1536)		111	00 0000	64
5.6448	22.05 (SCK/256)		010	00 0000	64
	14.7 (SCK/384)		011	00 0000	64
	11.025 (SCK/512)		100	00 0000	64
	7.35 (SCK/768)		101	00 0000	64
	5.5125 (SCK/1024)		110	00 0000	64
	3.675 (SCK/1536)		111	00 0000	64
11.2896	44.1 (SCK/256)		010	00 0000	64
	29.4 (SCK/384)		011	00 0000	64
	22.05 (SCK/512)		100	00 0000	64
	14.7 (SCK/768)		101	00 0000	64
	11.025 (SCK/1024)		110	00 0000	64
	7.35 (SCK/1536)		111	00 0000	64

(1) Other settings are reserved.

Table 13. System Clock Frequency for Application-Specific Clock

SYSTEM CLOCK SCK (MHz)	ADC SAMPLING RATE ADC f_S (kHz)	DAC SAMPLING RATE DAC f_S (kHz)	REGISTER SETTINGS		BIT CLOCK BCK (f_S)
			MSR[2:0]	NPR[5:0]	
13.5	48.214 (SCK/280)		010	00 0010	70
	44.407 (SCK/304)		010	00 0001	76
	32.142 (SCK/420)		010	10 0010	70
	24.107 (SCK/560)		100	00 0010	70
	22.203 (SCK/608)		100	00 0001	76
	16.071 (SCK/840)		100	10 0010	70
	12.053 (SCK/1120)		110	00 0010	70
	8.035 (SCK/1680)		110	10 0010	70
27	48.214 (SCK/560)		010	01 0010	70
	44.407 (SCK/608)		010	01 0001	76
	32.142 (SCK/840)		010	11 0010	70
	24.107 (SCK/1120)		100	01 0010	70
	22.203 (SCK/1216)		100	01 0001	76
	16.071 (SCK/1680)		100	11 0010	70
	12.053 (SCK/2240)		110	01 0010	70
	8.035 (SCK/3360)		110	11 0010	70
12	48.387 (SCK/248)		010	00 0100	62
	44.117 (SCK/272)		010	00 0011	68
	32.258 (SCK/372)		010	10 0100	62
	24.193 (SCK/496)		100	00 0100	62
	22.058 (SCK/544)		100	00 0011	68
	16.129 (SCK/744)		100	10 0100	62
	12.096 (SCK/992)		110	00 0100	62
	8.064 (SCK/1488)		110	10 0100	62
24	48.387 (SCK/496)		010	01 0100	62
	44.117 (SCK/544)		010	01 0011	68
	32.258 (SCK/744)		010	11 0100	62
	24.193 (SCK/992)		100	01 0100	62
	22.058 (SCK/1088)		100	01 0011	68
	16.129 (SCK/1488)		100	11 0100	62
	12.096 (SCK/1984)		110	01 0100	62
	8.064 (SCK/2976)		110	11 0100	62
19.2	48.484 (SCK/396)		011	00 0110	66
	44.444 (SCK/432)		011	00 0101	72
	32.323 (SCK/594)		011	10 0110	66
	24.242 (SCK/792)		101	00 0110	66
	22.222 (SCK/864)		101	00 0101	72
	16.161 (SCK/1188)		101	10 0110	66
	12.121 (SCK/1584)		111	00 0110	66
	8.080 (SCK/2376)		111	10 0110	66

Table 13. System Clock Frequency for Application-Specific Clock (continued)

SYSTEM CLOCK SCK (MHz)	ADC SAMPLING RATE ADC f_S (kHz)	DAC SAMPLING RATE DAC f_S (kHz)	REGISTER SETTINGS		BIT CLOCK BCK (f_S)
			MSR[2:0]	NPR[5:0]	
38.4	48.484 (SCK/792)		011	01 0110	66
	44.444 (SCK/864)		011	01 0101	72
	32.323 (SCK/1188)		011	11 0110	66
	24.242 (SCK/1584)		101	01 0110	66
	22.222 (SCK/1728)		101	01 0101	72
	16.161 (SCK/2376)		101	11 0110	66
	12.121 (SCK/3168)		111	01 0110	66
	8.080 (SCK/4752)		111	11 0110	66
13	47.794 (SCK/272)		010	00 1000	68
	43.918 (SCK/296)		010	00 0111	74
	31.862 (SCK/408)		010	10 1000	68
	23.897 (SCK/544)		100	00 1000	68
	21.959 (SCK/592)		100	00 0111	74
	15.931 (SCK/816)		100	10 1000	68
	11.948 (SCK/1088)		110	00 1000	68
	7.965 (SCK/1632)		110	10 1000	68
26	47.794 (SCK/544)		010	01 1000	68
	43.918 (SCK/592)		010	01 0111	74
	31.862 (SCK/816)		010	11 1000	68
	23.897 (SCK/1088)		100	01 1000	68
	21.959 (SCK/1184)		100	01 0111	74
	15.931 (SCK/1632)		100	11 1000	68
	11.948 (SCK/2176)		110	01 1000	68
	7.965 (SCK/3264)		110	11 1000	68
19.68	48.235 (SCK/408)		011	00 1010	68
	44.324 (SCK/444)		011	00 1001	74
	32.156 (SCK/612)		011	10 1010	68
	24.117 (SCK/816)		101	00 1010	68
	22.162 (SCK/888)		101	00 1001	74
	16.078 (SCK/1224)		101	10 1010	68
	12.058 (SCK/1632)		111	00 1010	68
	8.039 (SCK/2448)		111	10 1010	68
39.36	48.235 (SCK/816)		011	01 1010	68
	44.324 (SCK/888)		011	01 1001	74
	32.156 (SCK/1224)		011	11 1010	68
	24.117 (SCK/1632)		101	01 1010	68
	22.162 (SCK/1776)		101	01 1001	74
	16.078 (SCK/2448)		101	11 1010	68
	12.058 (SCK/3264)		111	01 1010	68
	8.039 (SCK/4896)		111	11 1010	68

MBST: BCK Output Configuration in Master Mode

Default value: 0

This bit is used to control the BCK output configuration in master mode. In master mode, this bit sets the BCK output configuration to normal mode or burst mode. In normal mode (MBST = 0), the BCK clock runs continuously. In burst mode (MBST = 1), the BCK clock runs intermittently, and the number of clock cycles per LRCK period is reduced to equal the number of bits of audio data being transmitted. Operating in burst mode reduces the power consumption of V_{IO} (I/O cell power supply). This is effective in master mode (register 69 MSTR = 1).

MBST = 0	Normal output (default)
MBST = 1	Burst output

ATOD: ADC Digital Output to DAC Digital Input (Loopback)

Default value: 0

The ADC digital output is internally connected to the DAC digital input by setting ATOD = 1. This setting can be used to debug ADC functions or to monitor a recording.

ATOD= 0	Disabled (default)
ATOD= 1	Enabled

ZCRS: Zero-Cross for Digital Attenuation/Mute and Analog Gain Setting

Default value: 0

This bit is used to enablethe zero-cross detector, which reduces zipper noise while the digital soft mute, digital attenuation analog gain setting, or analog volume setting is being changed. If no zero-cross data is input for a $512/f_S$ period (10.6 ms at a 48-kHz sampling rate), then a time-out occurs and the PCM3793/94 starts changing the attenuation, gain, or volume level. The zero-cross detector cannot be used with continuous-zero and dc data.

ZCRS = 0	Zero cross disabled (default)
ZCRS = 1	Zero cross enabled

	B15	B14	B13	B12	B11	B10	B9	B8	B7	B6	B5	B4	B3	B2	B1	B0
Register 87	0	IDX6	IDX5	IDX4	IDX3	IDX2	IDX1	IDX0	AD2S	RSV	AIR1	AIR0	RSV	RSV	AIL1	AIL0

IDX[6:0]: 101 0111b (57h): Register 87

AD2S: Differential Amplifier Selector (MUX3 and MUX4)

Default value: 0

The PCM3793/94 has stereo single-input amplifiers (PG1, PG2) and a monaural differential-input amplifier (D2S) which can be used as ADC inputs. MUX3 and MUX4 can be selected as the monaural differential input by setting AD2S = 1.

AD2S = 0	Single-input amplifiers (default)
AD2S = 1	Differential-input amplifier

AIL[1:0]: AIN1L, AIN2L, and AIN3L Selector (MUX1)

Default value: 00

This bit is used to select one of the three analog inputs, AIN1L, AIN2L, or AIN3L.

AIL[1:0]	**AIN L-channel Select**
0 0	Disconnect (default)
0 1	AIN1L
1 0	AIN2L
1 1	AIN3L

AIR[1:0]: AIN1R, AIN2R, and AIN3R Selector (MUX2)

Default value: 00

This bit is used to select one of the three stereo analog inputs, AIN1R, AIN2R, or AIN3R.

AIR[1:0]	**AIN R-channel Select**
0 0	Disconnect (default)
0 1	AIN1R
1 0	AIN2R
1 1	AIN3R

	B15	B14	B13	B12	B11	B10	B9	B8	B7	B6	B5	B4	B3	B2	B1	B0
Register 88	0	IDX6	IDX5	IDX4	IDX3	IDX2	IDX1	IDX0	RSV	MXR2	MXR1	MXR0	RSV	MXL2	MXL1	MXL0

IDX[6:0]: 101 1000b (58h): Register 88

MXR2: Mixing SW6 to MXR (R-Channel Mixing Amplifier) From L-Channel Analog Input

Default value: 0

This bit is used to connect an analog source to MXR (R-ch mixing amplifier) from the L-ch analog input.

MXR2 = 0	Disable (default)
MXR2 = 1	Enable

MXR1: Mixing SW4 to MXR (R-Channel Mixing Amplifier) From R-Channel Analog Input

Default value: 0

This bit is used to connect an analog source to MXR (R-ch mixing amplifier) from the R-ch analog input.

MXR1 = 0	Disable (default)
MXR1 = 1	Enable

MXR0: Mixing SW5 to MXR (R-Channel Mixing Amplifier) From R-Channel DAC

Default value: 0

This bit is used to connect an analog source to MXR (R-ch mixing amplifier) from the R-ch DAC.

MXR0 = 0	Disable (default)
MXR0 = 1	Enable

MXL2: Mixing SW3 to MXL (L-Channel Mixing Amplifier) From R-Channel Analog Input

Default value: 0

This bit is used to connect an analog source to MXL (L-ch mixing amplifier) from the R-ch analog input.

MXL2 = 0	Disable (default)
MXL2 = 1	Enable

MXL1: Mixing SW1 to MXL (L-Channel Mixing Amplifier) From L-Channel Analog Input

Default value: 0

This bit is used to connect an analog source to MXR (L-ch mixing amplifier) from the L-ch analog input.

MXL1 = 0	Disable (default)
MXL1 = 1	Enable

MXL0: Mixing SW2 to MXL (L-Channel Mixing Amplifier) From L-Channel DAC

Default value: 0

This bit is used to connect an analog source to MXR (L-ch mixing amplifier) from the L-ch DAC.

MXL0 = 0	Disable (default)
MXL0 = 1	Enable

	B15	B14	B13	B12	B11	B10	B9	B8	B7	B6	B5	B4	B3	B2	B1	B0
Register 89	0	IDX6	IDX5	IDX4	IDX3	IDX2	IDX1	IDX0	RSV	GMR2	GMR1	GMR0	RSV	GML2	GML1	GML0

IDX[6:0]: 101 1001b (59h): Register 89

GMR[2:0]: Gain Level Control for PG6 (Gain Amplifier for Analog Input or R-Channel Bypass)

GML[2:0]: Gain Level Control for PG5 (Gain Amplifier for Analog Input or L-Channel Bypass)

Default value: 111

These bits are used for setting the gain level of the analog source to the mixing amplifier. It is recommended to set the gain level to avoid saturation in the analog mixer.

GMR[2:0] **GML[2:0]**	**Gain Level Control for PG6** **Gain Level Control for PG5**
0 0 0	–21 dB
0 0 1	–18 dB
0 1 0	–15 dB
0 1 1	–12 dB
1 0 0	–9 dB
1 0 1	–6 dB
1 1 0	–3 dB
1 1 1	0 dB (default)

	B15	B14	B13	B12	B11	B10	B9	B8	B7	B6	B5	B4	B3	B2	B1	B0
Register 90	0	IDX6	IDX5	IDX4	IDX3	IDX2	IDX1	IDX0	RSV	RSV	CMT1	CMT0	RSV	RSV	G20R	G20L

IDX[6:0]: 1011010b (5Ah): Register 90

CMT[1:0]: V_{COM} Ramp Up/Down Time Control

Default value: 00

These bits are used for selecting ramp up/down time from ground level to the common-voltage level or from the common-voltage to ground level during the power up/down sequence, in order to reduce audible pop noise.

CMT[1:0]	V_{COM} Ramp Up/Down Time Control
0 0	Nominal; R_{CMT} = 60 kΩ (default)
0 1	Slow; R_{CMT} = 120 kΩ
1 0	Fast; R_{CMT} = 30 kΩ
1 1	Fastest; R_{CMT} = 2.73 kΩ

G20R: 20-dB Boost for PG2 (Gain Amplifier for AIN1R, AIN2R, and AIN3R)

Default value: 0

This bit is used to boost the microphone signal when the analog input is small.

G20R = 0	0 dB (default)
G20R = 1	20-dB boost

G20L: 20-dB Boost for PG1 (Gain Amplifier for AIN1L, AIN2L, and AIN3L)

Default value: 0

This bit is used to boost the microphone signal when the analog input is small.

G20L = 0	0 dB (default)
G20L = 1	20-dB boost

	B15	B14	B13	B12	B11	B10	B9	B8	B7	B6	B5	B4	B3	B2	B1	B0
Register 92	0	IDX6	IDX5	IDX4	IDX3	IDX2	IDX1	IDX0	LPAE	RSV	RSV	LGA4	LGA3	LGA2	LGA1	LGA0

IDX[6:0]: 101 1100b (5Ch): Register 92

LPAE: Gain Adjustment for Bass Boost Gain Control

Default value: 0

A gain setting for bass boost may cause digital data may saturation, depending on the input data level. Where this could occur, LPAE can be used to set the same attenuation level as the bass boost gain level for the digital input data.

LPAE = 0	Disable (default)
LPAE = 1	Enable

LGA[4:0]: Bass Boost Gain Control

Default value: 0 0000

These bits are used to set the bass boost gain level for digital data. The detailed characteristic is shown in the *Typical Performance Curves*.

LGA[4:0]	TONE CONTROL GAIN (BASS)	LGA[4:0]	TONE CONTROL GAIN (BASS)
0 0000	0 dB (default)	0 1111	0 dB
0 0011	12 dB	1 0000	–1 dB
0 0100	11 dB	1 0001	–2 dB
0 0101	10 dB	1 0010	–3 dB
0 0110	9 dB	1 0011	–4 dB
0 0111	8 dB	1 0100	–5 dB
0 1000	7 dB	1 0101	–6 dB
0 1001	6 dB	1 0110	–7 dB
0 1010	5 dB	1 0111	–8 dB
0 1011	4 dB	1 1000	–9 dB
0 1100	3 dB	1 1001	–10 dB
0 1101	2 dB	1 1010	–11 dB
0 1110	1 dB	1 1011	–12 dB

	B15	B14	B13	B12	B11	B10	B9	B8	B7	B6	B5	B4	B3	B2	B1	B0
Register 93	0	IDX6	IDX5	IDX4	IDX3	IDX2	IDX1	IDX0	RSV	RSV	RSV	MGA4	MGA3	MGA2	MGA1	MGA0

IDX[6:0]: 101 1101b (5Dh): Register 93

MGA[4:0]: Middle Boost Gain Control

Default value: 00000

These bits are used to set middle boost gain level to digital data. The detailed characteristic is shown in the *Typical Performance Curves*.

MGA[4:0]	TONE CONTROL GAIN (MIDRANGE)	MGA[4:0]	TONE CONTROL GAIN (MIDRANGE)
0 0000	0 dB (default)	0 1111	0 dB
0 0011	12 dB	1 0000	–1 dB
0 0100	11 dB	1 0001	–2 dB
0 0101	10 dB	1 0010	–3 dB
0 0110	9 dB	1 0011	–4 dB
0 0111	8 dB	1 0100	–5 dB
0 1000	7 dB	1 0101	–6 dB
0 1001	6 dB	1 0110	–7 dB
0 1010	5 dB	1 0111	–8 dB
0 1011	4 dB	1 1000	–9 dB
0 1100	3 dB	1 1001	–10 dB
0 1101	2 dB	1 1010	–11 dB
0 1110	1 dB	1 1011	–12 dB

	B15	B14	B13	B12	B11	B10	B9	B8	B7	B6	B5	B4	B3	B2	B1	B0
Register 94	0	IDX6	IDX5	IDX4	IDX3	IDX2	IDX1	IDX0	RSV	RSV	RSV	HGA4	HGA3	HGA2	HGA1	HGA0

IDX[6:0]: 101 1110b (5Eh): Register 94

HGA[4:0]: Treble Boost Gain Control (f_C = 5 kHz)

Default value: 00000

These bits are used to set middle boost gain level to digital data. The detailed characteristic is shown in the *Typical Performance Curves*.

HGA[4:0]	TONE CONTROL GAIN (TREBLE)	HGA[4:0]	TONE CONTROL GAIN (TREBLE)
0 0000	0 dB (default)	0 1111	0 dB
0 0011	12 dB	1 0000	–1 dB
0 0100	11 dB	1 0001	–2 dB
0 0101	10 dB	1 0010	–3 dB
0 0110	9 dB	1 0011	–4 dB
0 0111	8 dB	1 0100	–5 dB
0 1000	7 dB	1 0101	–6 dB
0 1001	6 dB	1 0110	–7 dB
0 1010	5 dB	1 0111	–8 dB
0 1011	4 dB	1 1000	–9 dB
0 1100	3 dB	1 1001	–10 dB
0 1101	2 dB	1 1010	–11 dB
0 1110	1 dB	1 1011	–12 dB

	B15	B14	B13	B12	B11	B10	B9	B8	B7	B6	B5	B4	B3	B2	B1	B0
Register 95	0	IDX6	IDX5	IDX4	IDX3	IDX2	IDX1	IDX0	SDAS	3DEN	RSV	3FL0	3DP3	3DP2	3DP1	3DP0

IDX[6:0]: 101 1111b (5Fh): Register 95

SDAS: Source Select for Sound Effect (Tone Control, 3-D Sound, Notch Filter, Mono Mix)

Default value: 0

The PCM3793/94 includes sound effect circuits (tone control, 3-D sound, notch filter, mono mix) which can be used to filter either the digital input to the DAC or the digital output from the ADC. This bit selects the signal source of the sound effect circuit.

SDAS = 0	DAC digital input (default)
SDAS = 1	ADC digital output

3DEN: 3-D Sound Effect Enable

Default value: 0

This bit is used for enabling the 3-D sound effect filter. This filter has two independently controlled parameters.

3DEN = 0	Disable (default)
3DEN = 1	Enable

3FL0: Filter Selection for 3-D Sound

Default value: 0

This bit is used for selecting fron two kinds of filter type, narrow and wide. These filters have a different 3-D effect performance.

3FL0 = 0	Narrow (default)
3FL0 = 1	Wide

3DP[3:0]: Efficiency for 3-D Sound Effects

Default value: 0000

These bits are used for adjusting the 3-D sound efficiency. Higher percentages have greater efficiency.

3DP[3:0]	3D Sound Effect Efficiency
0 0 0 0	0% (default)
0 0 0 1	10%
0 0 1 0	20%
0 0 1 1	30%
0 1 0 0	40%
0 1 0 1	50%
0 1 1 0	60%
0 1 1 1	70%
1 0 0 0	80%
1 0 0 1	90%
1 0 1 0	100%
1 0 1 1	Reserved
:	:
1 1 1 1	Reserved

	B15	B14	B13	B12	B11	B10	B9	B8	B7	B6	B5	B4	B3	B2	B1	B0
Register 96	0	IDX6	IDX5	IDX4	IDX3	IDX2	IDX1	IDX0	NEN2	NEN1	NUP2	NUP1	RSV	RSV	RSV	MXEN

IDX[6:0]: 110 0000b (60h): Register 96

NEN2: Second-Stage Notch Filter Enable

Default value: 0

PCM3793/94 has two notch filters with characteristics that can be set separately. This bit is used to enable the second stage.

NEN2 = 0	Disable (default)
NEN2 = 1	Enable

NEN1: First-Stage Notch Filter Enable

Default value: 0

PCM3793/94 has two notch filters with characteristics that can be set separately. This bit is used to enable the first stage.

NEN1 = 0	Disable (default)
NEN1 = 1	Enable

NUP2: Second-Stage Notch Filter Coefficients Update

Default value: 0

This bit is used to update the coefficients for 2nd stage notch filter. The coefficients written to registers 101, 102, 103, and 104 are updated when NUP2 = 1.

NUP2 = 0	No Update (default)
NUP2 = 1	Update (set to 0 automatically after set to 1)

NUP1: First-Stage Notch Filter Coefficients Update

Default value: 0

This bit is used to update the coefficients for the second-stage notch filter. The coefficients written to registers 97, 98, 99, and 100 are updated when NUP1 = 1.

NUP1 = 0	No Update (default)
NUP1 = 1	Update (set to 0 automatically after set to 1)

MXEN: Digital Monaural Mixing

Default value: 0

This bit is used to enable or disable monaural mixing in the section that combines L-ch data and R-ch data.

MXEN = 0	Stereo (default)
MXEN = 1	Monaural Mixing

	B15	B14	B13	B12	B11	B10	B9	B8	B7	B6	B5	B4	B3	B2	B1	B0
Register 97	0	IDX6	IDX5	IDX4	IDX3	IDX2	IDX1	IDX0	F107	F106	F105	F104	F103	F102	F101	F100
Register 98	0	IDX6	IDX5	IDX4	IDX3	IDX2	IDX1	IDX0	F115	F114	F113	F112	F111	F110	F109	F108
Register 99	0	IDX6	IDX5	IDX4	IDX3	IDX2	IDX1	IDX0	F207	F206	F205	F204	F203	F202	F201	F200
Register 100	0	IDX6	IDX5	IDX4	IDX3	IDX2	IDX1	IDX0	F215	F214	F213	F212	F211	F210	F209	F208

IDX[6:0]: 110 0001b (61h): Register 97

IDX[6:0]: 110 0010b (62h): Register 98

IDX[6:0]: 110 0011b (63h): Register 99

IDX[6:0]: 110 0100b (64h): Register 100

F[107:100]: Lower 8 Bits of Coefficient a_1 for First-Stage Notch Filter

F[115:108]: Upper 8 Bits of Coefficient a_1 for First-Stage Notch Filter

F[207:200]: Lower 8 Bits of Coefficient a_2 for First-Stage Notch Filter

F[215:208]: Upper 8 Bits of Coefficient a_2 for First-Stage Notch Filter

Default value: 0000 0000

These bits are used to change the characteristics of the first-stage notch filter. See Figure 38 for details.

	B15	B14	B13	B12	B11	B10	B9	B8	B7	B6	B5	B4	B3	B2	B1	B0
Register 101	0	IDX6	IDX5	IDX4	IDX3	IDX2	IDX1	IDX0	S107	S106	S105	S104	S103	S102	S101	S100
Register 102	0	IDX6	IDX5	IDX4	IDX3	IDX2	IDX1	IDX0	S115	S114	S113	S112	S111	S110	S109	S108
Register 103	0	IDX6	IDX5	IDX4	IDX3	IDX2	IDX1	IDX0	S207	S206	S205	S204	S203	S202	S201	S200
Register 104	0	IDX6	IDX5	IDX4	IDX3	IDX2	IDX1	IDX0	S215	S214	S213	S212	S211	S210	S209	S208

IDX[6:0]: 110 0101b (65h): Register 101

IDX[6:0]: 110 0110b (66h): Register 102

IDX[6:0]: 110 0111b (67h): Register 103

IDX[6:0]: 110 1000b (68h): Register 104

S[107:100]: Lower 8 bits of Coefficient a_1 for Second-Stage Notch Filter

S[115:108]: Upper 8 bits of Coefficient a_1 for Second-Stage Notch Filter

S[207:200]: Lower 8 bits of Coefficient a_2 for Second-Stage Notch Filter

S[215:208]: Upper 8 bits of Coefficient a_2 for Second-Stage Notch Filter

Default value: 00000000

These bits are used to change the characteristics of the second-stage notch filter. See Figure 38 for details.

The PCM3793/94 provides two notch filters for the digital input to the DAC or the digital output from the ADC. The optional filter characteristics of each filter are programmable. The characteristics are given by calculating the coefficients for three parameters, sampling frequency, center frequency, and bandwidth, as shown in Figure 38. All coefficients must be written as 2s-complement binary data into registers 97, 98, 99, 100, 101, 102, 103, and 104.

f_S: Sampling Frequency [Hz]
f_C: Center Frequency [Hz]
f_b: Band Width [Hz]

$$a_1 = -(1 + a_2)\cos\left(\frac{2\pi f_C}{f_S}\right) \quad \text{(Equation 1)}$$

$$a_2 = \frac{1 - \tan\left(\frac{2\pi f_b/f_S}{2}\right)}{1 + \tan\left(\frac{2\pi f_b/f_S}{2}\right)} \quad \text{(Equation 2)}$$

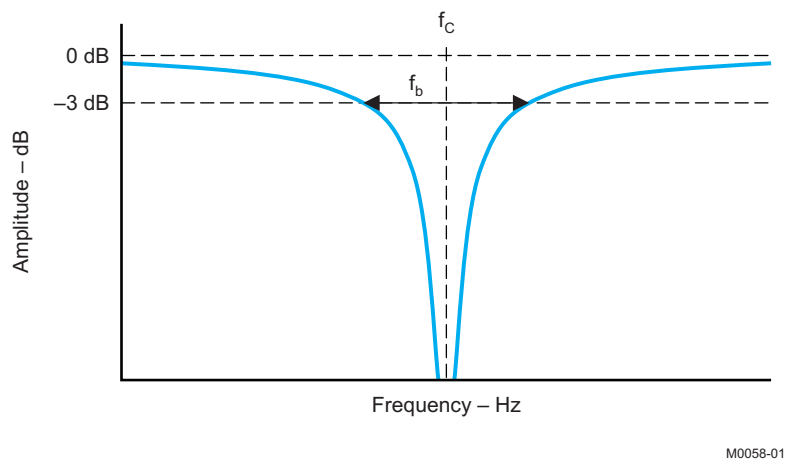

Figure 38. Parameter Settings for Notch Filter

The coefficients are calculated using Equation 1 and Equation 2 in Figure 38. An example follows:

f_S = 16 kHz, f_C = 0.5 kHz, f_b = 0.2 kHz
a_2 = 0.924390492 → Decimal to Hex → 3B29h
a_1 = –1.887413868 → Decimal to Hex → 8735h
a_2: F[215:208] = 3Bh, F[207:200] = 29h
a_1: F[115:108] = 87h, F[107:100] = 35h

CONNECTION DIAGRAM

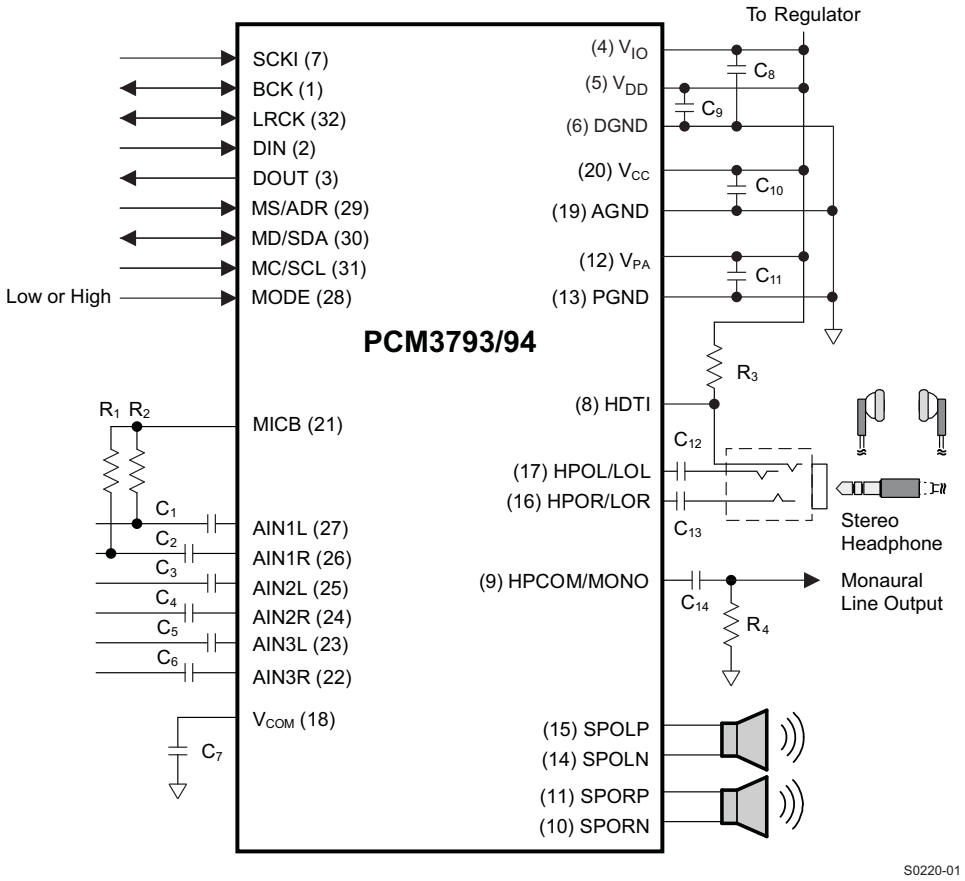

Figure 39. Connection Diagram

Table 14. Recommended External Parts

C_1–C_6	1 µF	C_{12}, C_{13}	10 µF–220 µF
C_7	1 µF–10 µF (1)	C_{14}	1 µF–10 µF
C_8	0.1 µF	R_1, R_2	2.2 kΩ
C_9, C_{10}	1 µF–4.7 µF	R_3	33 kΩ
C_{11}	4.7 µF–10 µF	R_4	10 kΩ

(1) 10 µF is recommended to reduce audible pop noise.

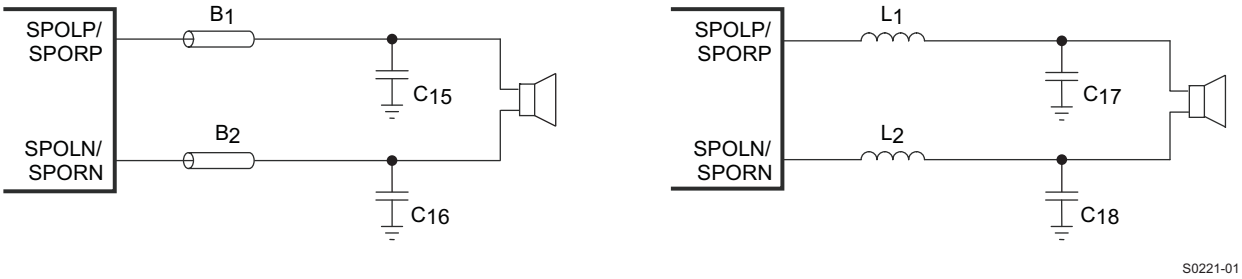

NOTE: C_{15}, C_{16} = 1 nF C_{17}, C_{18}: 1 µF B_1, B_2: NEC/Tokin N2012ZPS121 L_1, L_2: 22 to 33 µH

Figure 40. Filter Consideration for Speaker Output

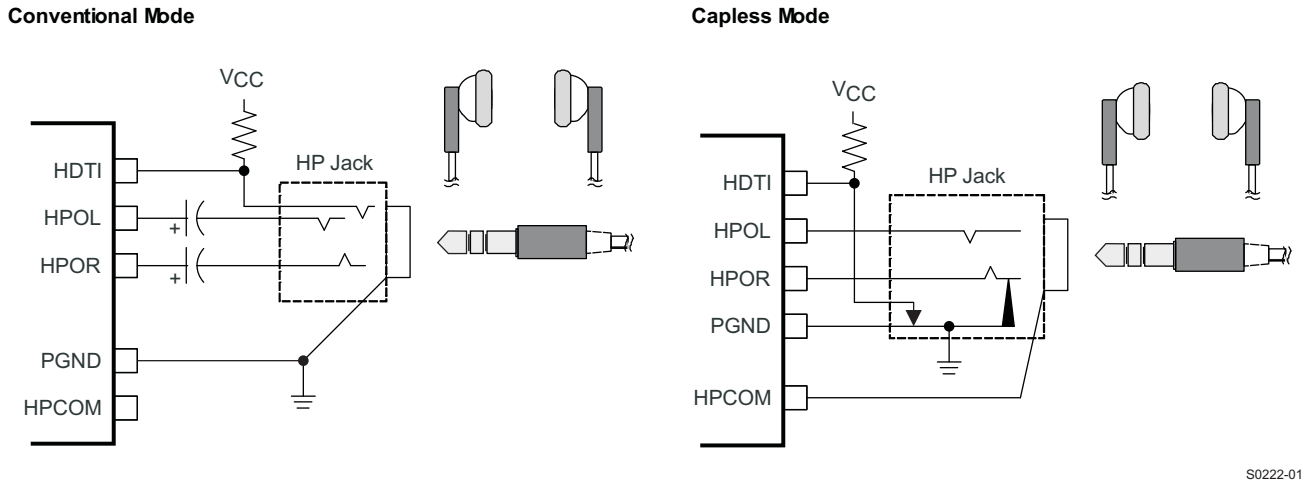

Figure 41. Connection for Headphone Output and Insertion Detection

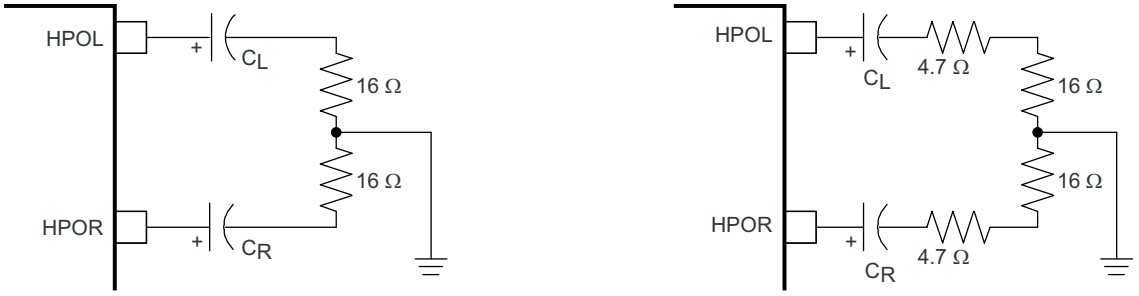

C_L, C_R – µF	f_C – Hz
10	995
47	212
100	100
220	45

C_L, C_R – µF	f_C – Hz
10	770
47	163
100	77
220	35

Figure 42. High-Pass Filter for Headphone Output

PACKAGING INFORMATION

Orderable Device	Status [1]	Package Type	Package Drawing	Pins	Package Qty	Eco Plan [2]	Lead/Ball Finish	MSL Peak Temp [3]
PCM3793RHBR	ACTIVE	QFN	RHB	32	3000	Green (RoHS & no Sb/Br)	CU NIPDAU	Level-2-260C-1 YEAR
PCM3793RHBRG4	ACTIVE	QFN	RHB	32	3000	Green (RoHS & no Sb/Br)	CU NIPDAU	Level-2-260C-1 YEAR
PCM3793RHBT	ACTIVE	QFN	RHB	32	250	Green (RoHS & no Sb/Br)	CU NIPDAU	Level-2-260C-1 YEAR
PCM3793RHBTG4	ACTIVE	QFN	RHB	32	250	Green (RoHS & no Sb/Br)	CU NIPDAU	Level-2-260C-1 YEAR
PCM3794RHBR	ACTIVE	QFN	RHB	32	3000	Green (RoHS & no Sb/Br)	Call TI	Level-2-260C-1 YEAR
PCM3794RHBRG4	ACTIVE	QFN	RHB	32	3000	Green (RoHS & no Sb/Br)	Call TI	Level-2-260C-1 YEAR
PCM3794RHBT	ACTIVE	QFN	RHB	32	250	Green (RoHS & no Sb/Br)	Call TI	Level-2-260C-1 YEAR
PCM3794RHBTG4	ACTIVE	QFN	RHB	32	250	Green (RoHS & no Sb/Br)	Call TI	Level-2-260C-1 YEAR

[1] The marketing status values are defined as follows:
ACTIVE: Product device recommended for new designs.
LIFEBUY: TI has announced that the device will be discontinued, and a lifetime-buy period is in effect.
NRND: Not recommended for new designs. Device is in production to support existing customers, but TI does not recommend using this part in a new design.
PREVIEW: Device has been announced but is not in production. Samples may or may not be available.
OBSOLETE: TI has discontinued the production of the device.

[2] Eco Plan - The planned eco-friendly classification: Pb-Free (RoHS), Pb-Free (RoHS Exempt), or Green (RoHS & no Sb/Br) - please check http://www.ti.com/productcontent for the latest availability information and additional product content details.
TBD: The Pb-Free/Green conversion plan has not been defined.
Pb-Free (RoHS): TI's terms "Lead-Free" or "Pb-Free" mean semiconductor products that are compatible with the current RoHS requirements for all 6 substances, including the requirement that lead not exceed 0.1% by weight in homogeneous materials. Where designed to be soldered at high temperatures, TI Pb-Free products are suitable for use in specified lead-free processes.
Pb-Free (RoHS Exempt): This component has a RoHS exemption for either 1) lead-based flip-chip solder bumps used between the die and package, or 2) lead-based die adhesive used between the die and leadframe. The component is otherwise considered Pb-Free (RoHS compatible) as defined above.
Green (RoHS & no Sb/Br): TI defines "Green" to mean Pb-Free (RoHS compatible), and free of Bromine (Br) and Antimony (Sb) based flame retardants (Br or Sb do not exceed 0.1% by weight in homogeneous material)

[3] MSL, Peak Temp. -- The Moisture Sensitivity Level rating according to the JEDEC industry standard classifications, and peak solder temperature.

TAPE AND REEL INFORMATION

REEL DIMENSIONS

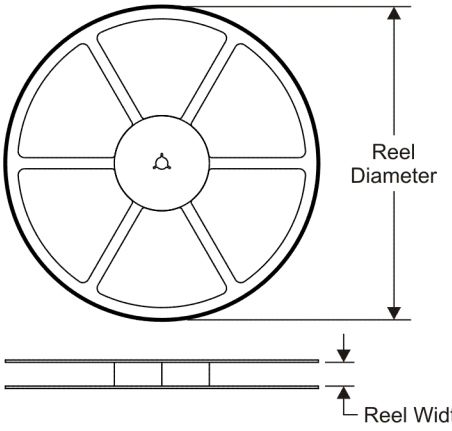

TAPE DIMENSIONS

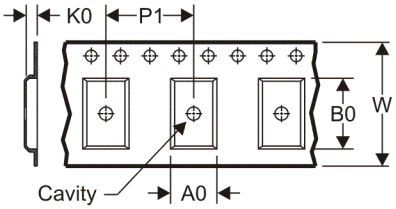

A0	Dimension designed to accommodate the component width
B0	Dimension designed to accommodate the component length
K0	Dimension designed to accommodate the component thickness
W	Overall width of the carrier tape
P1	Pitch between successive cavity centers

QUADRANT ASSIGNMENTS FOR PIN 1 ORIENTATION IN TAPE

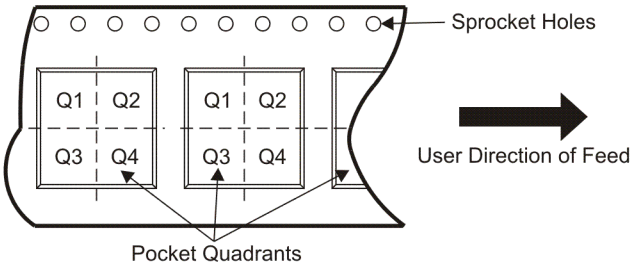

*All dimensions are nominal

Device	Package Type	Package Drawing	Pins	SPQ	Reel Diameter (mm)	Reel Width W1 (mm)	A0 (mm)	B0 (mm)	K0 (mm)	P1 (mm)	W (mm)	Pin1 Quadrant
PCM3793RHBR	QFN	RHB	32	3000	330.0	12.4	5.3	5.3	1.5	8.0	12.0	Q2
PCM3793RHBT	QFN	RHB	32	250	180.0	12.4	5.3	5.3	1.5	8.0	12.0	Q2
PCM3794RHBR	QFN	RHB	32	3000	330.0	12.4	5.3	5.3	1.5	8.0	12.0	Q2
PCM3794RHBT	QFN	RHB	32	250	180.0	12.4	5.3	5.3	1.5	8.0	12.0	Q2

TAPE AND REEL BOX DIMENSIONS

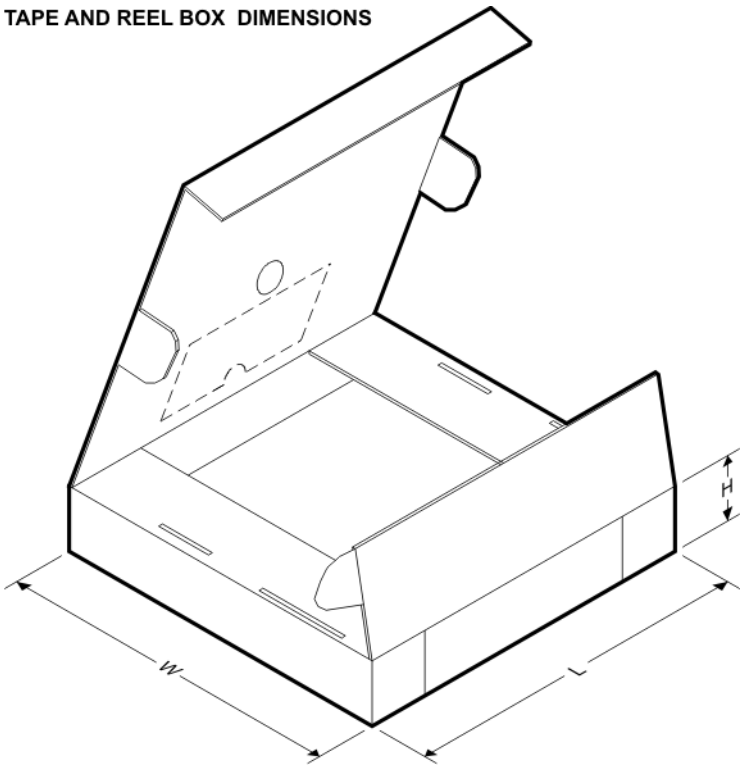

*All dimensions are nominal

Device	Package Type	Package Drawing	Pins	SPQ	Length (mm)	Width (mm)	Height (mm)
PCM3793RHBR	QFN	RHB	32	3000	346.0	346.0	29.0
PCM3793RHBT	QFN	RHB	32	250	190.5	212.7	31.8
PCM3794RHBR	QFN	RHB	32	3000	346.0	346.0	29.0
PCM3794RHBT	QFN	RHB	32	250	190.5	212.7	31.8

RHB (S–PQFP–N32) PLASTIC QUAD FLATPACK

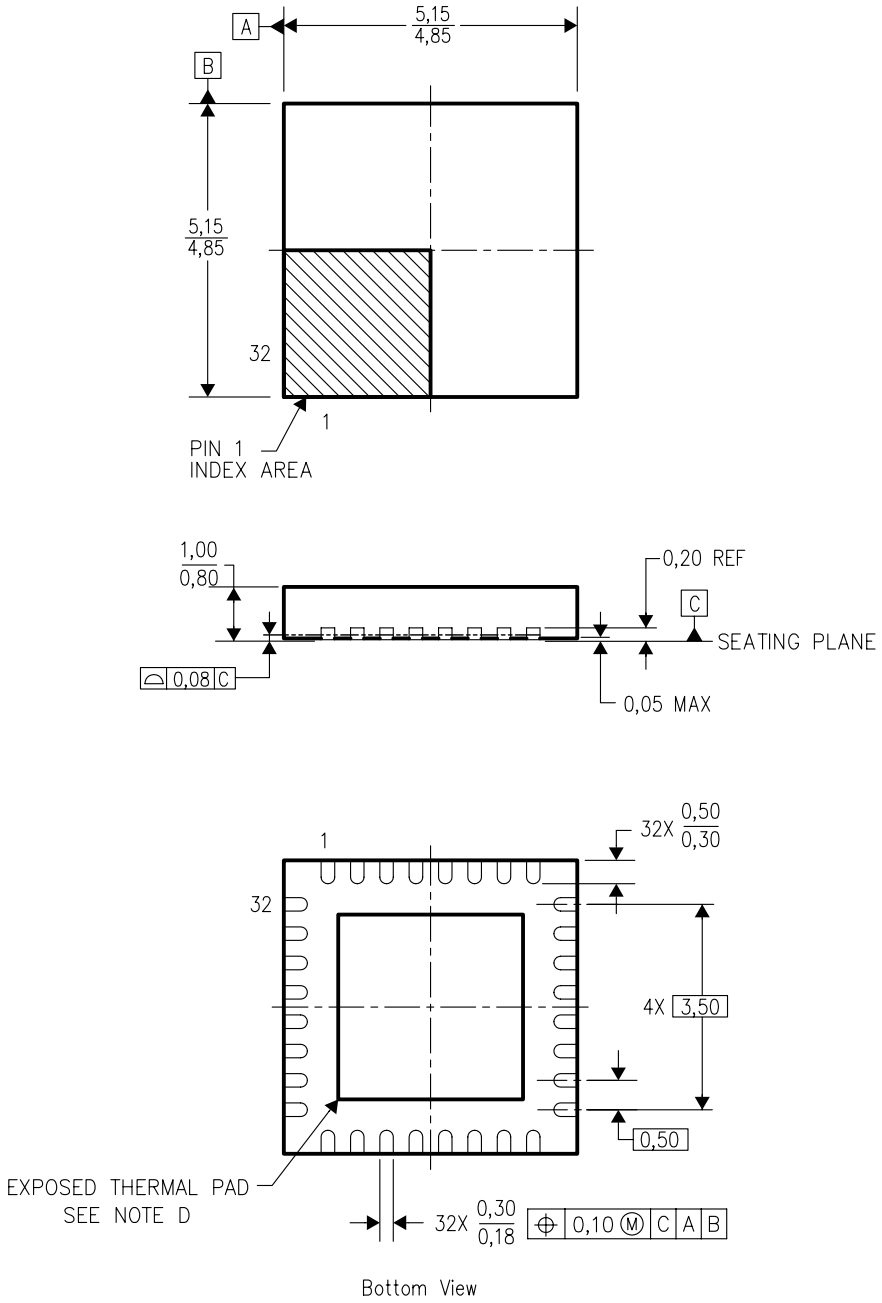

4204326/C xx/04

NOTES:
A. All linear dimensions are in millimeters.
B. This drawing is subject to change without notice.
C. QFN (Quad Flatpack No–Lead) Package configuration.
D The Package thermal pad must be soldered to the board for thermal and mechanical performance. See product data sheet for details regarding the exposed thermal pad dimensions.
E. Falls within JEDEC MO–220.

RHB (S-PVQFN-N32) PLASTIC QUAD FLATPACK NO-LEAD

THERMAL INFORMATION

This package incorporates an exposed thermal pad that is designed to be attached directly to an external heatsink. The thermal pad must be soldered directly to the printed circuit board (PCB). After soldering, the PCB can be used as a heatsink. In addition, through the use of thermal vias, the thermal pad can be attached directly to the appropriate copper plane shown in the electrical schematic for the device, or alternatively, can be attached to a special heatsink structure designed into the PCB. This design optimizes the heat transfer from the integrated circuit (IC).

For information on the Quad Flatpack No-Lead (QFN) package and its advantages, refer to Application Report, QFN/SON PCB Attachment, Texas Instruments Literature No. SLUA271. This document is available at www.ti.com.

The exposed thermal pad dimensions for this package are shown in the following illustration.

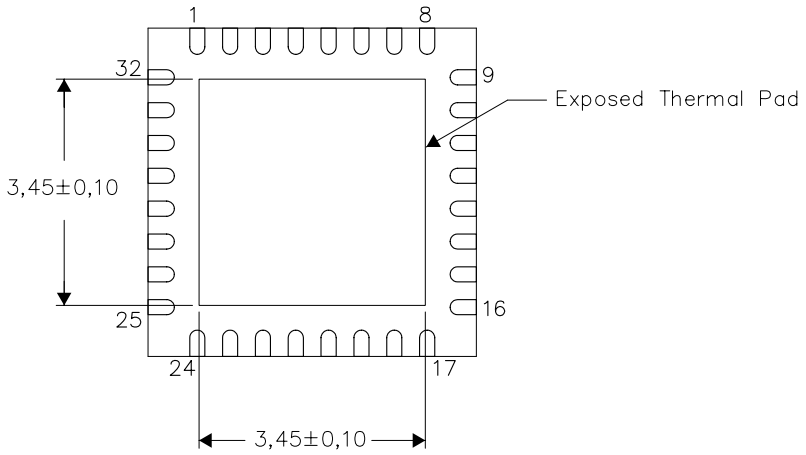

Bottom View

Exposed Thermal Pad Dimensions

4206356-2/Q 11/10

NOTE: A. All linear dimensions are in millimeters

RHB (S-PVQFN-N32) PLASTIC QUAD FLATPACK NO-LEAD

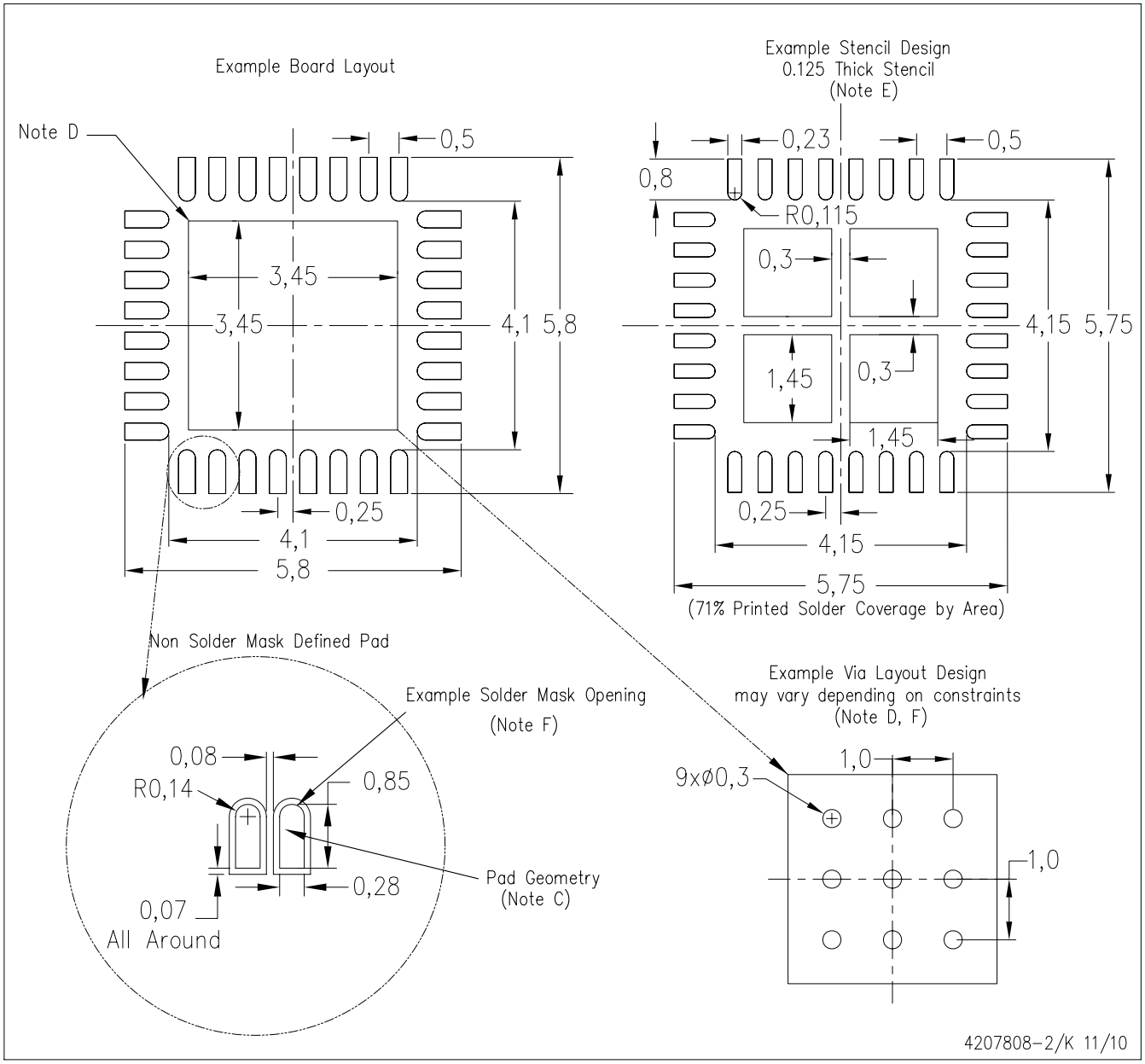

NOTES:
- A. All linear dimensions are in millimeters.
- B. This drawing is subject to change without notice.
- C. Publication IPC-7351 is recommended for alternate designs.
- D. This package is designed to be soldered to a thermal pad on the board. Refer to Application Note, Quad Flat-Pack Packages, Texas Instruments Literature No. SLUA271, and also the Product Data Sheets for specific thermal information, via requirements, and recommended board layout. These documents are available at www.ti.com <http://www.ti.com>.
- E. Laser cutting apertures with trapezoidal walls and also rounding corners will offer better paste release. Customers should contact their board assembly site for stencil design recommendations. Refer to IPC 7525 for stencil design considerations.
- F. Customers should contact their board fabrication site for recommended solder mask tolerances and via tenting recommendations for vias placed in the thermal pad.

IMPORTANT NOTICE

Texas Instruments Incorporated and its subsidiaries (TI) reserve the right to make corrections, modifications, enhancements, improvements, and other changes to its products and services at any time and to discontinue any product or service without notice. Customers should obtain the latest relevant information before placing orders and should verify that such information is current and complete. All products are sold subject to TI's terms and conditions of sale supplied at the time of order acknowledgment.

TI warrants performance of its hardware products to the specifications applicable at the time of sale in accordance with TI's standard warranty. Testing and other quality control techniques are used to the extent TI deems necessary to support this warranty. Except where mandated by government requirements, testing of all parameters of each product is not necessarily performed.

TI assumes no liability for applications assistance or customer product design. Customers are responsible for their products and applications using TI components. To minimize the risks associated with customer products and applications, customers should provide adequate design and operating safeguards.

TI does not warrant or represent that any license, either express or implied, is granted under any TI patent right, copyright, mask work right, or other TI intellectual property right relating to any combination, machine, or process in which TI products or services are used. Information published by TI regarding third-party products or services does not constitute a license from TI to use such products or services or a warranty or endorsement thereof. Use of such information may require a license from a third party under the patents or other intellectual property of the third party, or a license from TI under the patents or other intellectual property of TI.

Reproduction of TI information in TI data books or data sheets is permissible only if reproduction is without alteration and is accompanied by all associated warranties, conditions, limitations, and notices. Reproduction of this information with alteration is an unfair and deceptive business practice. TI is not responsible or liable for such altered documentation. Information of third parties may be subject to additional restrictions.

Resale of TI products or services with statements different from or beyond the parameters stated by TI for that product or service voids all express and any implied warranties for the associated TI product or service and is an unfair and deceptive business practice. TI is not responsible or liable for any such statements.

TI products are not authorized for use in safety-critical applications (such as life support) where a failure of the TI product would reasonably be expected to cause severe personal injury or death, unless officers of the parties have executed an agreement specifically governing such use. Buyers represent that they have all necessary expertise in the safety and regulatory ramifications of their applications, and acknowledge and agree that they are solely responsible for all legal, regulatory and safety-related requirements concerning their products and any use of TI products in such safety-critical applications, notwithstanding any applications-related information or support that may be provided by TI. Further, Buyers must fully indemnify TI and its representatives against any damages arising out of the use of TI products in such safety-critical applications.

TI products are neither designed nor intended for use in military/aerospace applications or environments unless the TI products are specifically designated by TI as military-grade or "enhanced plastic." Only products designated by TI as military-grade meet military specifications. Buyers acknowledge and agree that any such use of TI products which TI has not designated as military-grade is solely at the Buyer's risk, and that they are solely responsible for compliance with all legal and regulatory requirements in connection with such use.

TI products are neither designed nor intended for use in automotive applications or environments unless the specific TI products are designated by TI as compliant with ISO/TS 16949 requirements. Buyers acknowledge and agree that, if they use any non-designated products in automotive applications, TI will not be responsible for any failure to meet such requirements.

Following are URLs where you can obtain information on other Texas Instruments products and application solutions:

Products		**Applications**	
Amplifiers	amplifier.ti.com	Audio	www.ti.com/audio
Data Converters	dataconverter.ti.com	Automotive	www.ti.com/automotive
DLP® Products	www.dlp.com	Communications and Telecom	www.ti.com/communications
DSP	dsp.ti.com	Computers and Peripherals	www.ti.com/computers
Clocks and Timers	www.ti.com/clocks	Consumer Electronics	www.ti.com/consumer-apps
Interface	interface.ti.com	Energy	www.ti.com/energy
Logic	logic.ti.com	Industrial	www.ti.com/industrial
Power Mgmt	power.ti.com	Medical	www.ti.com/medical
Microcontrollers	microcontroller.ti.com	Security	www.ti.com/security
RFID	www.ti-rfid.com	Space, Avionics & Defense	www.ti.com/space-avionics-defense
RF/IF and ZigBee® Solutions	www.ti.com/lprf	Video and Imaging	www.ti.com/video
		Wireless	www.ti.com/wireless-apps

Mailing Address: Texas Instruments, Post Office Box 655303, Dallas, Texas 75265