Silicon Diffused Power Transistor BUT11AF

GENERAL DESCRIPTION

High-voltage, high-speed glass-passivated npn power transistor in a SOT186 envelope with electrically insulated mounting base,intended for use in converters, inverters, switching regulators, motor control systems, etc.

QUICK REFERENCE DATA

SYMBOL	PARAMETER	CONDITIONS	TYP.	MAX.	UNIT
V_{CESM}	Collector-emitter voltage peak value	V_{BE} = 0 V	-	1000	V
V_{CEO}	Collector-emitter voltage (open base)		-	450	V
I_C	Collector current (DC)		-	5	A
I_{CM}	Collector current peak value		-	10	A
P_{tot}	Total power dissipation	$T_{hs} \leq 25$ ˚C	-	20	W
V_{CEsat}	Collector-emitter saturation voltage		-	1.5	V
I_{Csat}	Collector saturation current		2.5	-	A
t_f	Fall time		800	-	ns

[INCLUDE]

LIMITING VALUES

Limiting values in accordance with the Absolute Maximum Rating System (IEC 134)

SYMBOL	PARAMETER	CONDITIONS	MIN.	MAX.	UNIT
V_{CESM}	Collector-emitter voltage peak value	V_{BE} = 0 V	-	1000	V
V_{CEO}	Collector-emitter voltage (open base)		-	450	V
I_C	Collector current (DC)		-	5	A
I_{CM}	Collector current peak value		-	10	A
I_B	Base current (DC)		-	2	A
I_{BM}	Base current peak value		-	4	A
P_{tot}	Total power dissipation	$T_{hs} \leq 25$ ˚C	-	20	W
T_{stg}	Storage temperature		-65	150	˚C
T_j	Junction temperature		-	150	˚C

THERMAL RESISTANCES

SYMBOL	PARAMETER	CONDITIONS	TYP.	MAX.	UNIT
$R_{th\ j\text{-}hs}$	Junction to heatsink	with heatsink compound	-	3.95	K/W
$R_{th\ j\text{-}a}$	Junction to ambient	in free air	55	-	K/W

ISOLATION LIMITING VALUE & CHARACTERISTIC

T_{hs} = 25 ˚C unless otherwise specified

SYMBOL	PARAMETER	CONDITIONS	MIN.	TYP.	MAX.	UNIT
V_{isol}	Repetitive peak voltage from all three terminals to external heatsink	R.H. ≤ 65% ; clean and dustfree	-		1500	V
C_{isol}	Capacitance from T2 to external heatsink	f = 1 MHz	-	12	-	pF

STATIC CHARACTERISTICS

T_{hs} = 25 ˚C unless otherwise specified

SYMBOL	PARAMETER	CONDITIONS	MIN.	TYP.	MAX.	UNIT
I_{CES}	Collector cut-off current [1]	V_{BE} = 0 V; V_{CE} = $V_{CESMmax}$	-	-	1.0	mA
I_{CES}		V_{BE} = 0 V; V_{CE} = $V_{CESMmax}$; T_j = 125 ˚C	-	-	2.0	mA
I_{EBO}	Emitter cut-off current	V_{EB} = 9 V; I_C = 0 A	-	-	10	mA
$V_{CEOsust}$	Collector-emitter sustaining voltage	I_B = 0 A; I_C = 100 mA; L = 25 mH	450	-	-	V
V_{CEsat}	Collector-emitter saturation voltages	I_C = 2.5 A; I_B = 0.5 A	-	-	1.5	V
V_{BEsat}	Base-emitter saturation voltage	I_C = 2.5 A; I_B = 0.5 A	-	-	1.3	V
h_{FE}	DC current gain	I_C = 5 mA; V_{CE} = 5 V	10	18	35	
h_{FE}		I_C = 500 mA; V_{CE} = 5 V	10	20	35	

DYNAMIC CHARACTERISTICS

T_{hs} = 25 ˚C unless otherwise specified

SYMBOL	PARAMETER	CONDITIONS	TYP.	MAX.	UNIT
	Switching times (resistive load)	I_{Con} = 2.5 A; I_{Bon} = -I_{Boff} = 0.5 A			
t_{on}	Turn-on time		-	1	µs
t_s	Turn-off storage time		-	4	µs
t_f	Turn-off fall time		-	0.8	µs
	Switching times (inductive load)	I_{Con} = 2.5 A; I_{Bon} = 0.5 A; L_B = 1 µH; -V_{BB} = 5 V			
t_s	Turn-off storage time		1.1	1.4	µs
t_f	Turn-off fall time		80	150	ns
	Switching times (inductive load)	I_{Con} = 2.5 A; I_{Bon} = 0.5 A; L_B = 1 µH; -V_{BB} = 5 V; T_j = 100 ˚C			
t_s	Turn-off storage time		1.2	1.5	µs
t_f	Turn-off fall time		140	300	ns

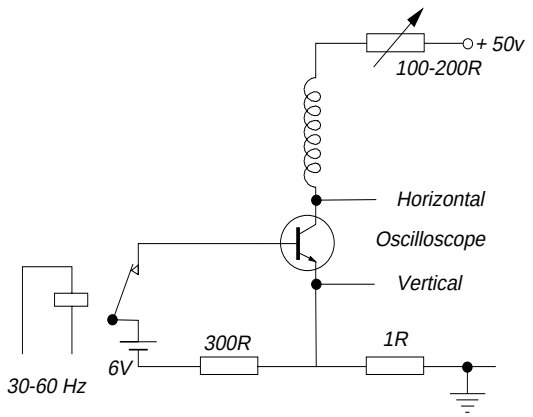

Fig.1. Test circuit for $V_{CEOsust}$.

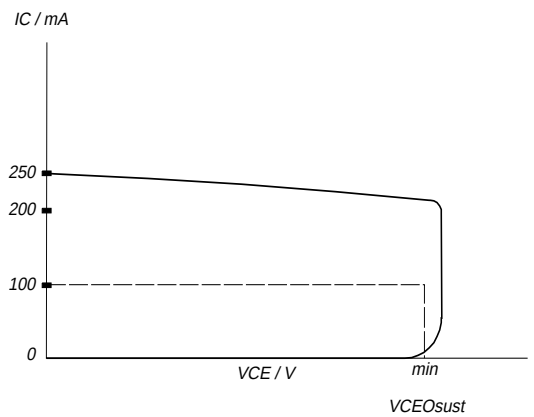

Fig.2. Oscilloscope display for $V_{CEOsust}$.

1 Measured with half sine-wave voltage (curve tracer).

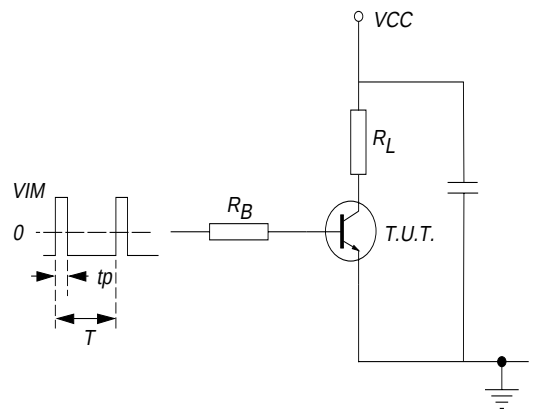

Fig.3. Test circuit resistive load. V_{IM} = -6 to +8 V
V_{CC} = 250 V; t_p = 20 µs; δ = t_p / T = 0.01.
R_B and R_L calculated from I_{Con} and I_{Bon} requirements.

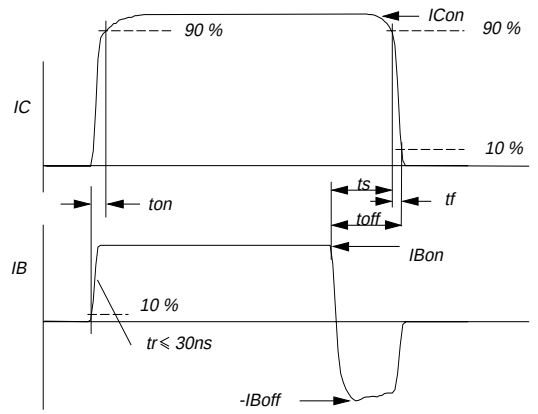

Fig.4. Switching times waveforms with resistive load.

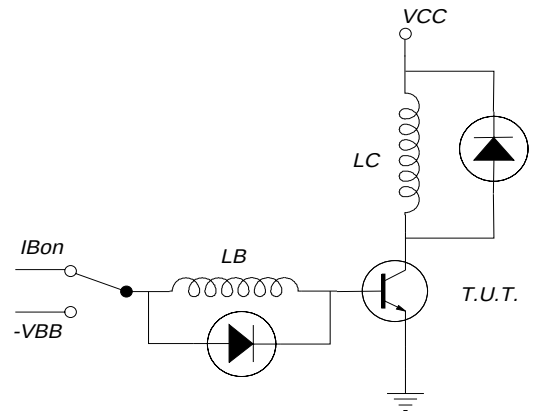

Fig.5. Test circuit inductive load.
V_{CC} = 300 V; -V_{BE} = 5 V; L_C = 200 uH; L_B = 1 uH

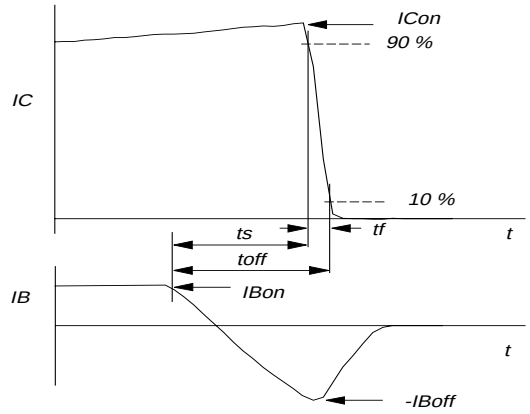

Fig.6. Switching times waveforms with inductive load.

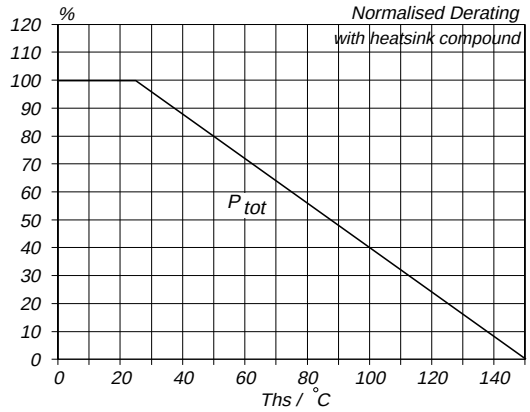

Fig.7. Normalised power derating and second breakdown curves.

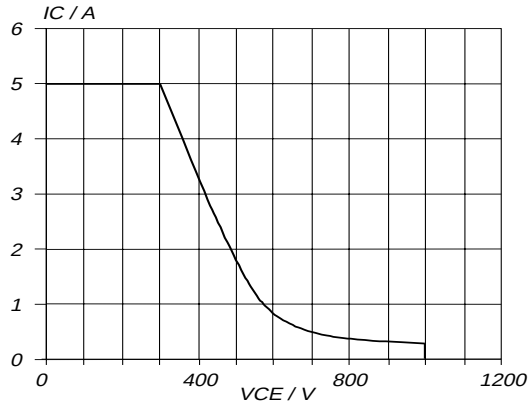

Fig.8. Reverse bias safe operating area. $T_j \leq T_{j\,max}$

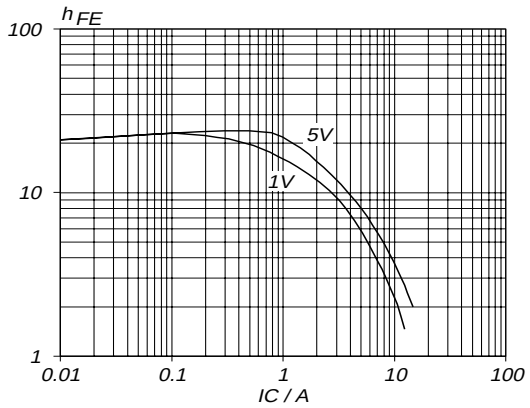

Fig.9. Typical DC current gain.
$h_{FE} = f(I_C)$; parameter V_{CE}

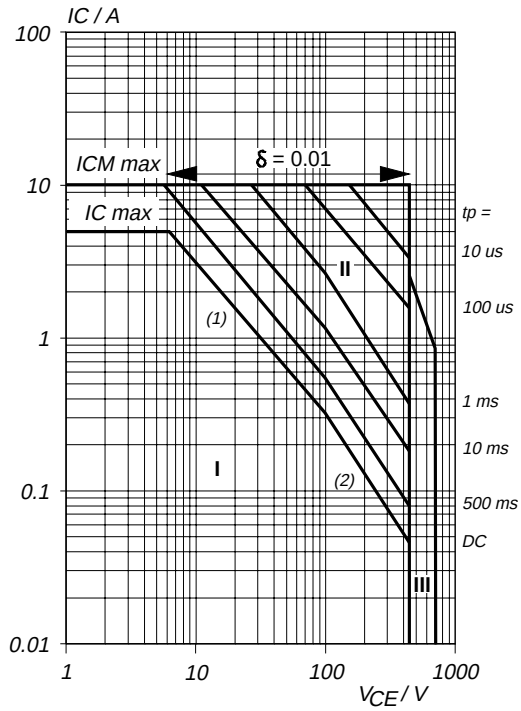

Fig.10. Forward bias safe operating area. $T_{hs} \leq 25$ ˚C

(1)	*P_{tot} max and P_{tot} peak max lines.*
(2)	*Second breakdown limits.*
I	*Region of permissible DC operation.*
II	*Extension for repetitive pulse operation.*
III	*Extension during turn-on in single transistor converters provided that $R_{BE} \leq 100\ \Omega$ and $t_p \leq 0.6\ \mu s$.*
NB:	*Mounted with heatsink compound and 30 ± 5 newton force on the centre of the envelope.*

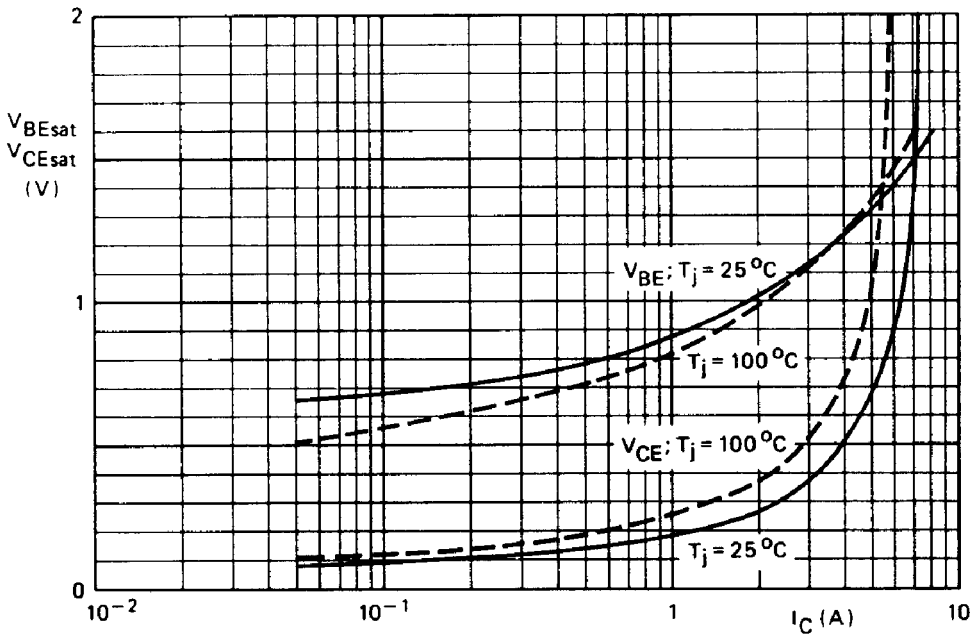

Fig.11. Typical base-emitter and collector-emitter saturation voltages.
$V_{BEsat} = f(I_C)$; $V_{CEsat} = f(I_C)$; $I_C/I_B = 5$

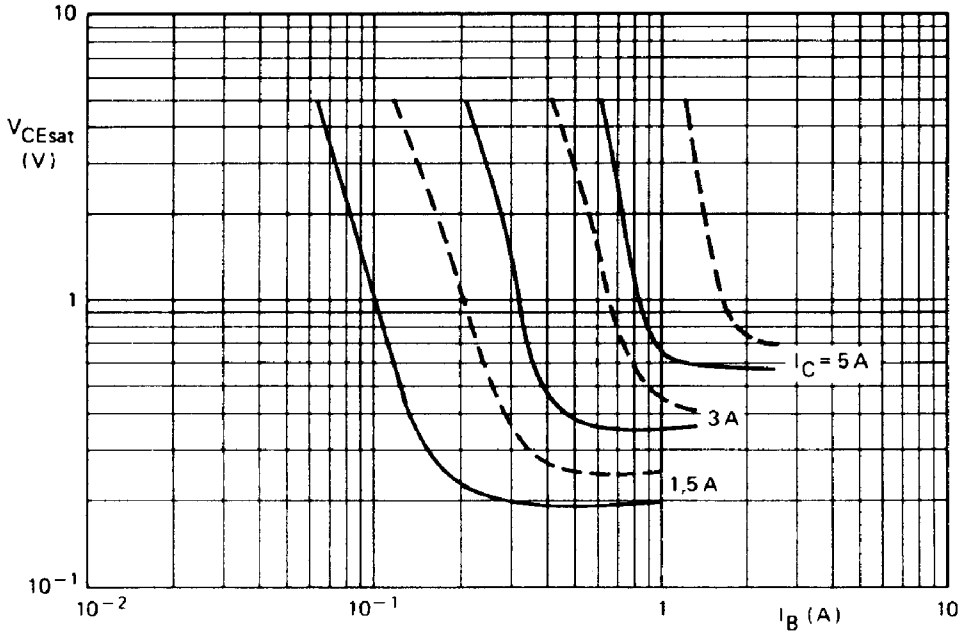

Fig.12. Collector-emitter saturation voltage. Solid lines = typ values, dotted lines = max values. $V_{CEsat} = f(I_B)$; parameter I_C

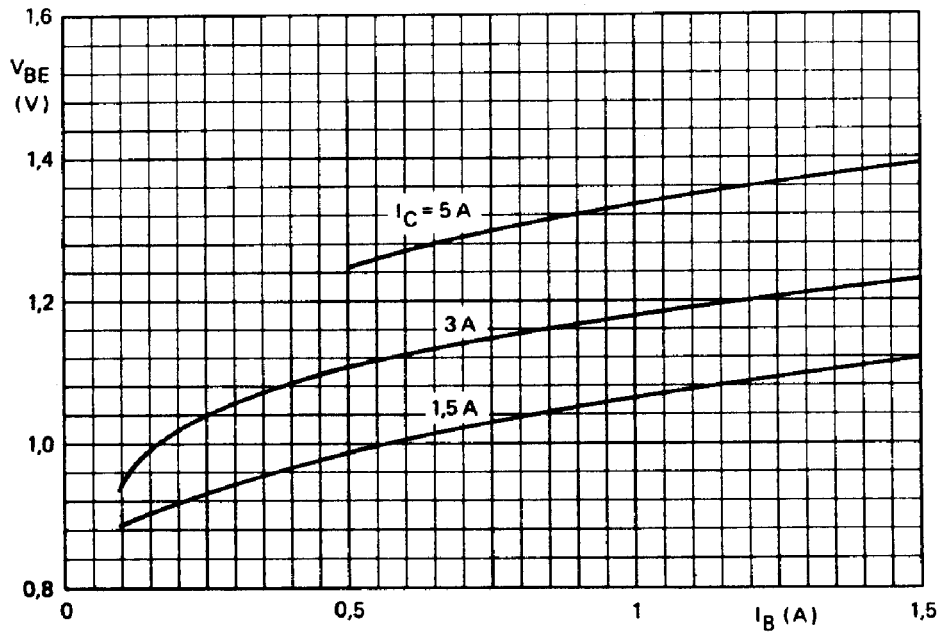

Fig.13. Typical base-emitter saturation voltage.
$V_{BEsat} = f(I_B)$; parameter I_C

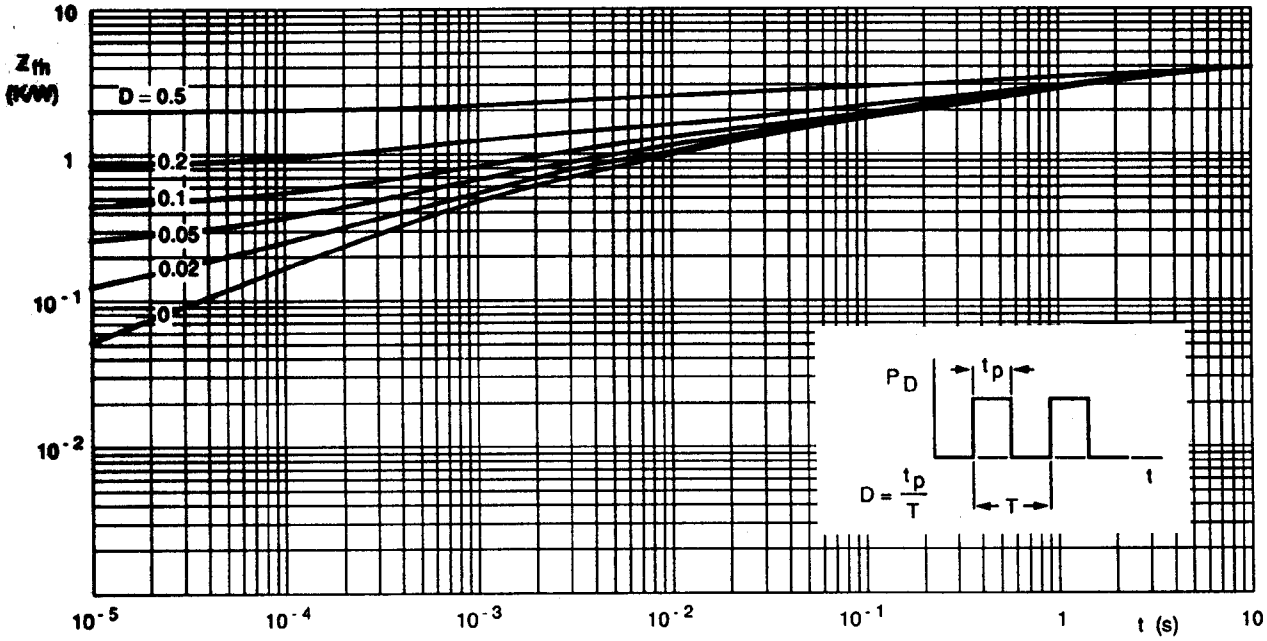

Fig.14. Transient thermal impedance.
$Z_{th\ j\text{-}hs} = f(t)$; parameter $D = t_p/T$

MECHANICAL DATA

Dimensions in mm

Net Mass: 2 g

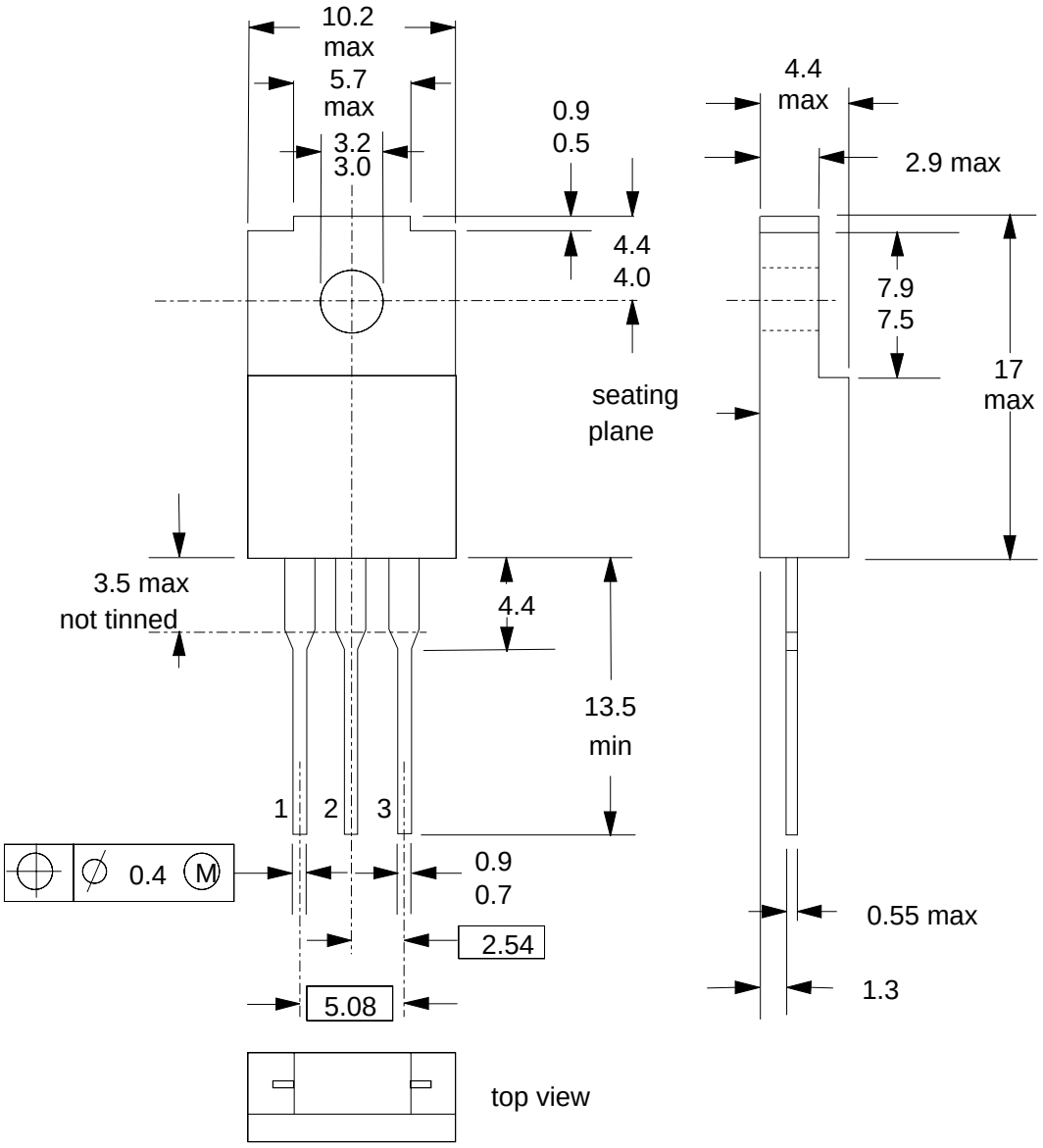

Fig.15. SOT186; The seating plane is electrically isolated from all terminals.

Notes

1. Observe the general handling precautions for electrostatic-discharge sensitive devices (ESDs) to prevent damage to MOS gate oxide.
2. Refer to mounting instructions for F-pack envelopes.
3. Epoxy meets UL94 V0 at 1/8".

DEFINITIONS

Data sheet status	
Objective specification	This data sheet contains target or goal specifications for product development.
Preliminary specification	This data sheet contains preliminary data; supplementary data may be published later.
Product specification	This data sheet contains final product specifications.
Limiting values	
Limiting values are given in accordance with the Absolute Maximum Rating System (IEC 134). Stress above one or more of the limiting values may cause permanent damage to the device. These are stress ratings only and operation of the device at these or at any other conditions above those given in the Characteristics sections of this specification is not implied. Exposure to limiting values for extended periods may affect device reliability.	
Application information	
Where application information is given, it is advisory and does not form part of the specification.	
© **Philips Electronics N.V. 1997**	
All rights are reserved. Reproduction in whole or in part is prohibited without the prior written consent of the copyright owner.	
The information presented in this document does not form part of any quotation or contract, it is believed to be accurate and reliable and may be changed without notice. No liability will be accepted by the publisher for any consequence of its use. Publication thereof does not convey nor imply any license under patent or other industrial or intellectual property rights.	

LIFE SUPPORT APPLICATIONS

These products are not designed for use in life support appliances, devices or systems where malfunction of these products can be reasonably expected to result in personal injury. Philips customers using or selling these products for use in such applications do so at their own risk and agree to fully indemnify Philips for any damages resulting from such improper use or sale.