# L78M00 SERIES

## POSITIVE VOLTAGE REGULATORS

- OUTPUT CURRENT TO 0.5A
- OUTPUT VOLTAGES OF 5; 6; 8; 9; 12; 15; 18; 20; 24V
- THERMAL OVERLOAD PROTECTION
- SHORT CIRCUIT PROTECTION
- OUTPUT TRANSITION SOA PROTECTION

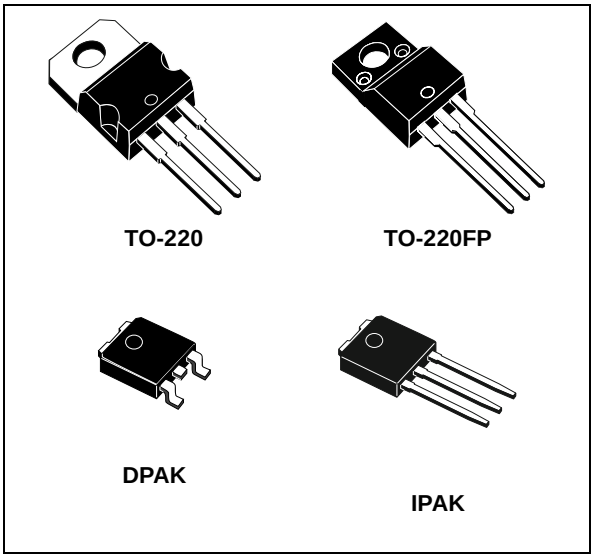


### DESCRIPTION

The L78M00 series of three-terminal positive regulators is available in TO-220, TO-220FP, DPAK and IPAK packages and with several fixed output voltages, making it useful in a wide range of applications. These regulators can provide local on-card regulation, eliminating the distribution problems associated with single point regulation. Each type employs internal current limiting, thermal shut-down and safe area protection, making it essentially indestructible. If adequate heat sinking is provided, they can deliver over 0.5A output current. Although designed primarily as fixed voltage regulators, these devices can be used with external components to obtain adjustable voltage and currents.

### SCHEMATIC DIAGRAM

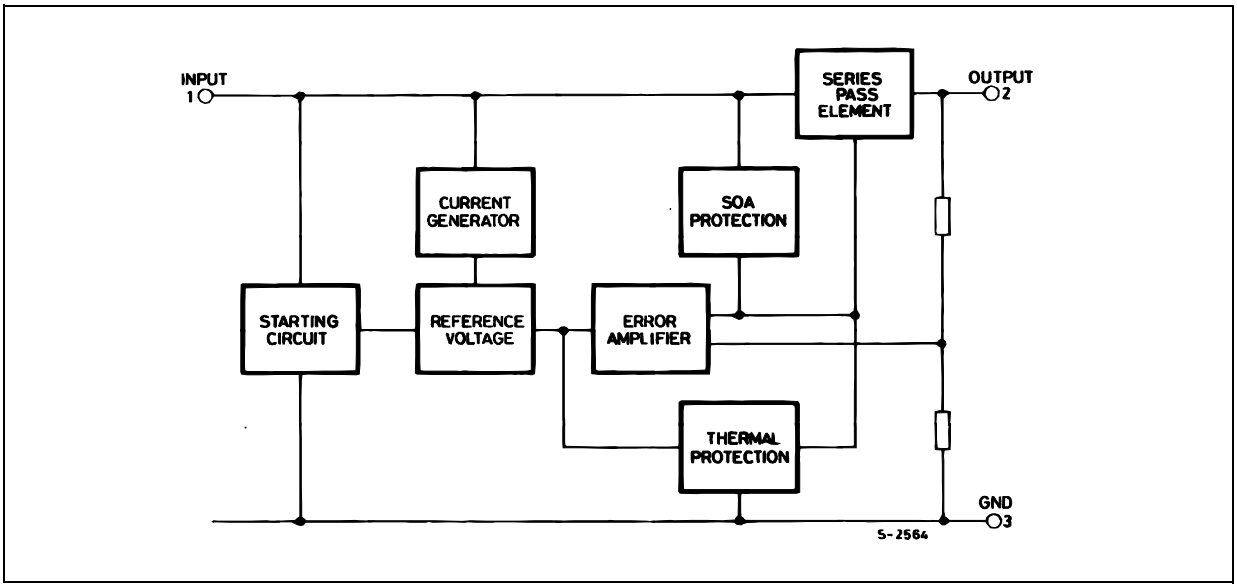

## ABSOLUTE MAXIMUM RATINGS

| Symbol | Parameter | Value | Unit |
|---|---|---|---|
| $V_I$ | DC Input Voltage (for $V_O$= 5 to 18V)<br>(for $V_O$= 20, 24V) | 35<br>40 | V<br>V |
| $I_O$ | Output Current | Internally Limited | mA |
| $P_D$ | Power Dissipation | Internally Limited | mW |
| $T_{stg}$ | Storage Temperature Range | -65 to +150 | °C |
| $T_{op}$ | Operating Junction Temperature Range | 0 to +150 | °C |

Absolute Maximum Ratings are those values beyond which damage to the device may occur. Functional operation under these condition is not implied.

## THERMAL DATA

| Symbol | Parameter | TO-220 | TO-220FP | DPAK | IPAK | Unit |
|---|---|---|---|---|---|---|
| $R_{thj-case}$ | Thermal Resistance Junction-case | 3 | 5 | 8 | | °C/W |
| $R_{thj-amb}$ | Thermal Resistance Junction-ambient | 50 | 60 | 100 | | °C/W |

## SHEMATIC DIAGRAM

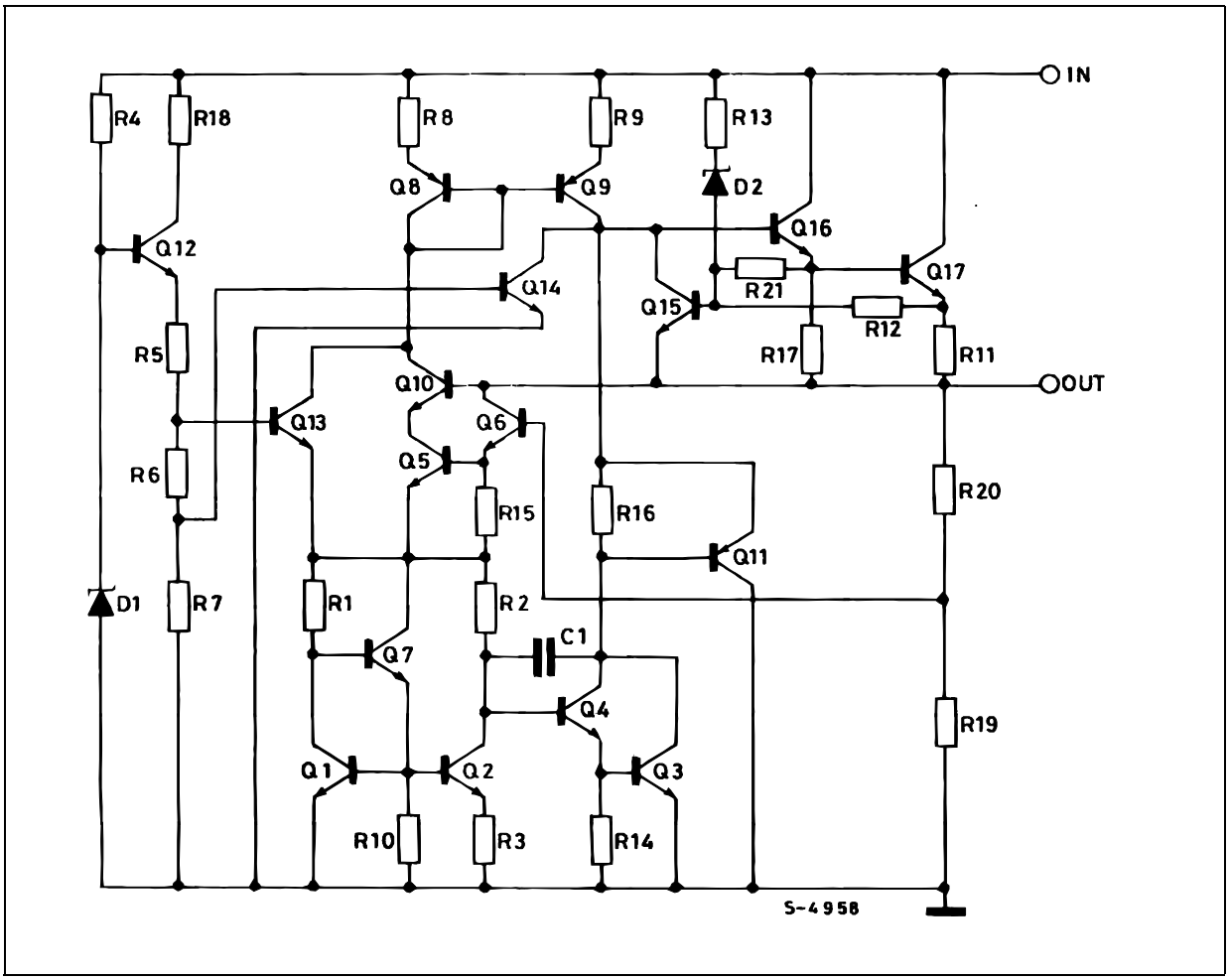

## CONNECTION DIAGRAM (top view)

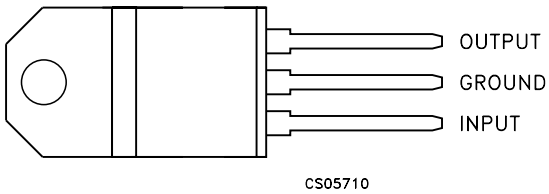


**TO-220**

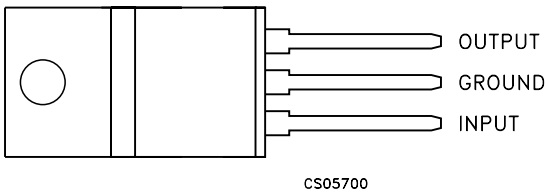


**TO-220FP**

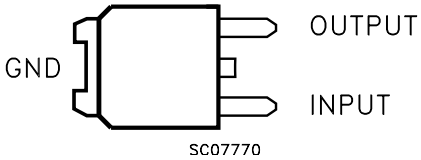


**DPAK**

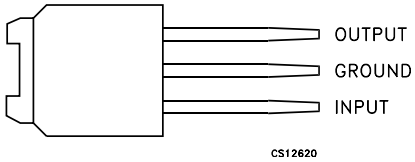


**IPAK**

## ORDERING CODES

| TYPE | TO-220 | TO-220FP | DPAK (*) | IPAK | OUTPUT VOLTAGE |
|---|---|---|---|---|---|
| L78M05 | L78M05CV | L78M05CP | L78M05CDT | L78M05CDT-1 | 5 V |
| L78M06 | L78M06CV | L78M06CP | L78M06CDT | L78M06CDT-1 | 6 V |
| L78M08 | L78M08CV | L78M08CP | L78M08CDT | L78M08CDT-1 | 8 V |
| L78M09 | L78M09CV | L78M09CP | L78M09CDT | L78M09CDT-1 | 9 V |
| L78M10 | L78M10CV | L78M10CP | L78M10CDT | L78M10CDT-1 | 10 V |
| L78M12 | L78M12CV | L78M12CP | L78M12CDT | L78M12CDT-1 | 12 V |
| L78M15 | L78M15CV | L78M15CP | L78M15CDT | L78M15CDT-1 | 15 V |
| L78M18 | L78M18CV | L78M18CP | L78M18CDT | L78M18CDT-1 | 18 V |
| L78M20 | L78M20CV | L78M20CP | L78M20CDT | L78M20CDT-1 | 20 V |
| L78M24 | L78M24CV | L78M24CP | L78M24CDT | L78M24CDT-1 | 24 V |

(*) Available in Tape & Reel with the suffix "-TR".

## APPLICATION CIRCUITS

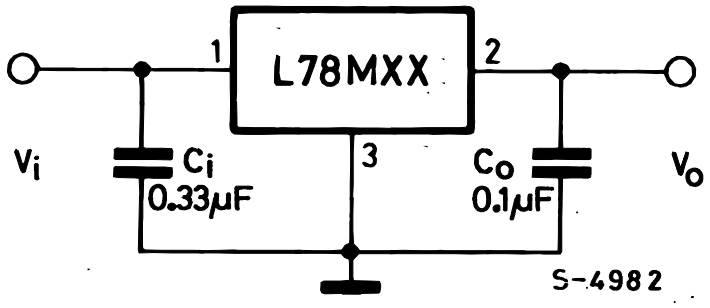

## TEST CIRCUITS

**Figure 1 :** DC Parameter

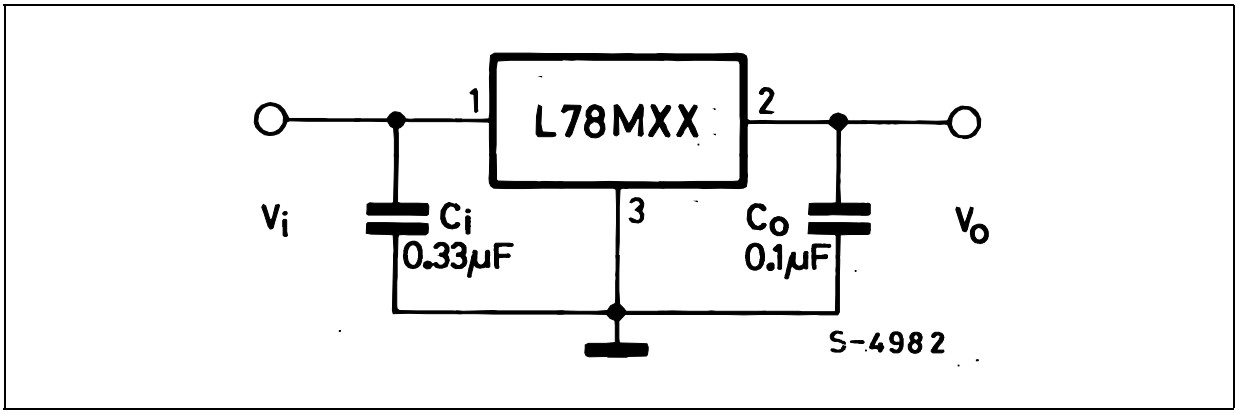


**Figure 2 :** Load Regulation

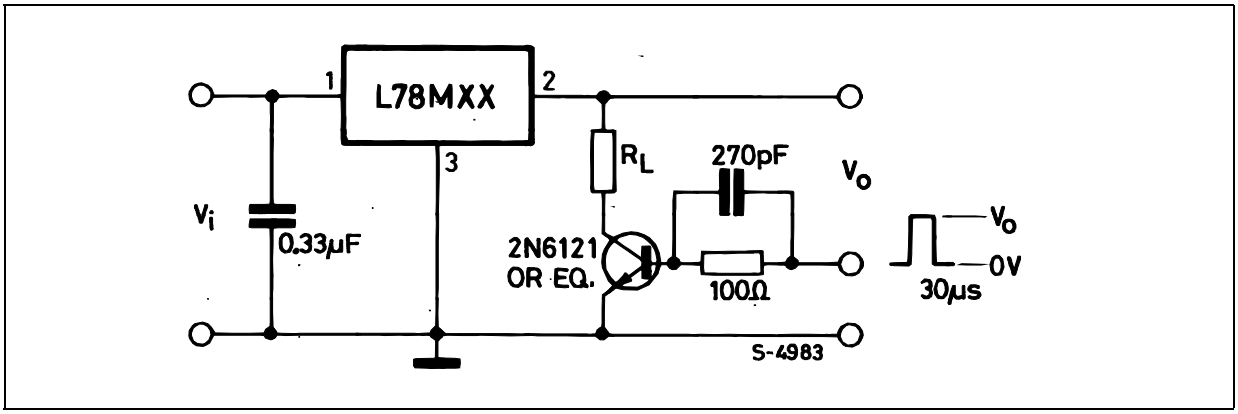


**Figure 3 :** Ripple Rejection

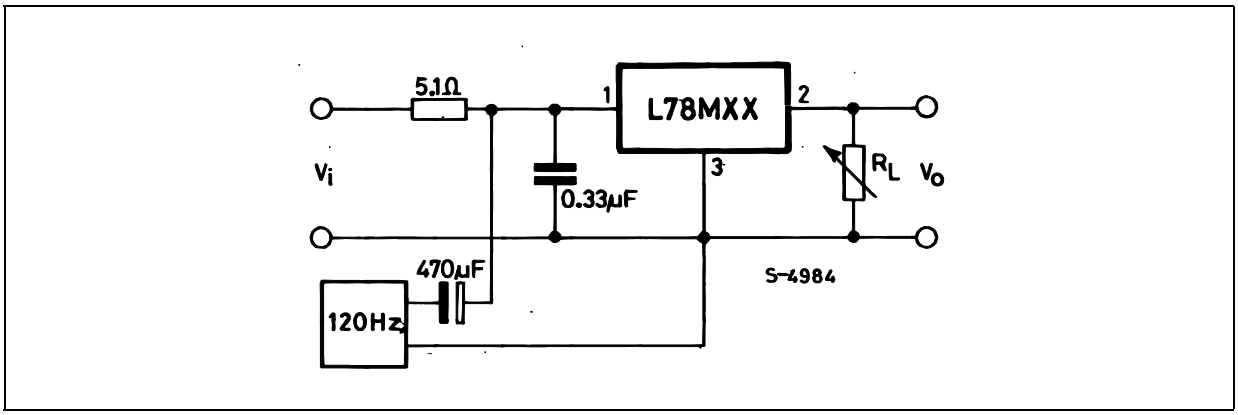

**ELECTRICAL CHARACTERISTICS OF L78M05C** (refer to the test circuits, $T_J$ = 25°C, $V_I$ = 10V, $I_O$ = 350 mA, $C_I$ = 0.33 µF, $C_O$ = 0.1 µF unless otherwise specified).

| Symbol | Parameter | Test Conditions | | Min. | Typ. | Max. | Unit |
|---|---|---|---|---|---|---|---|
| $V_O$ | Output Voltage | | | 4.8 | 5 | 5.2 | V |
| $V_O$ | Output Voltage | $I_O$ = 5 to 350 mA | $V_I$ = 7 to 20 V | 4.75 | 5 | 5.25 | V |
| $\Delta V_O$ | Line Regulation | $V_I$ = 7 to 25 V | $I_O$ = 200 mA | | | 100 | mV |
| | | $V_I$ = 8 to 25 V | $I_O$ = 200 mA | | | 50 | |
| $\Delta V_O$ | Load Regulation | $I_O$ = 5 to 500 mA | $T_J$ = 25°C | | | 100 | mV |
| | | $I_O$ = 5 to 200 mA | $T_J$ = 25°C | | | 50 | |
| $I_d$ | Quiescent Current | | | | | 6 | mA |
| $\Delta I_d$ | Quiescent Current Change | $I_O$ = 5 to 350 mA | | | | 0.5 | mA |
| | | $I_O$ = 200 mA | $V_I$ = 8 to 25 V | | | 0.8 | |
| $\Delta V_O/\Delta T$ | Output Voltage Drift | $I_O$ = 5 mA | $T_J$ = 0 to 125°C | | -0.5 | | mV/°C |
| SVR | Supply Voltage Rejection | $V_I$ = 8 to 18 V<br>$I_O$ = 300mA | f = 120Hz | 62 | | | dB |
| eN | Output Noise Voltage | B =10Hz to 100KHz | | | 40 | | µV |
| $V_d$ | Dropout Voltage | | | | 2 | | V |
| $I_{sc}$ | Short Circuit Current | $V_I$ = 35 V | | | 300 | | mA |

**ELECTRICAL CHARACTERISTICS OF L78M06C** (refer to the test circuits, $T_J$ = 25°C, $V_I$ = 11V, $I_O$ = 350 mA, $C_I$ = 0.33 µF, $C_O$ = 0.1 µF unless otherwise specified).

| Symbol | Parameter | Test Conditions | | Min. | Typ. | Max. | Unit |
|---|---|---|---|---|---|---|---|
| $V_O$ | Output Voltage | | | 5.75 | 6 | 6.25 | V |
| $V_O$ | Output Voltage | $I_O$ = 5 to 350 mA | $V_I$ = 8 to 21 V | 5.7 | 6 | 6.3 | V |
| $\Delta V_O$ | Line Regulation | $V_I$ = 8 to 25 V | $I_O$ = 200 mA | | | 100 | mV |
| | | $V_I$ = 9 to 25 V | $I_O$ = 200 mA | | | 50 | |
| $\Delta V_O$ | Load Regulation | $I_O$ = 5 to 500 mA | $T_J$ = 25°C | | | 120 | mV |
| | | $I_O$ = 5 to 200 mA | $T_J$ = 25°C | | | 60 | |
| $I_d$ | Quiescent Current | | | | | 6 | mA |
| $\Delta I_d$ | Quiescent Current Change | $I_O$ = 5 to 350 mA | | | | 0.5 | mA |
| | | $I_O$ = 200 mA | $V_I$ = 9 to 25 V | | | 0.8 | |
| $\Delta V_O/\Delta T$ | Output Voltage Drift | $I_O$ = 5 mA | $T_J$ = 0 to 125°C | | -0.5 | | mV/°C |
| SVR | Supply Voltage Rejection | $V_I$ = 9 to 19 V<br>$I_O$ = 300mA | f = 120Hz | 59 | | | dB |
| eN | Output Noise Voltage | B =10Hz to 100KHz | | | 45 | | µV |
| $V_d$ | Dropout Voltage | | | | 2 | | V |
| $I_{sc}$ | Short Circuit Current | $V_I$ = 35 V | | | 270 | | mA |

**ELECTRICAL CHARACTERISTICS OF L78M08C** (refer to the test circuits, $T_J$ = 25°C, $V_I$ = 14V, $I_O$ = 350 mA, $C_I$ = 0.33 µF, $C_O$ = 0.1 µF unless otherwise specified).

| Symbol | Parameter | Test Conditions | Min. | Typ. | Max. | Unit |
|---|---|---|---|---|---|---|
| $V_O$ | Output Voltage | | 7.7 | 8 | 8.3 | V |
| $V_O$ | Output Voltage | $I_O$ = 5 to 350 mA $V_I$ = 10.5 to 23 V | 7.6 | 8 | 8.4 | V |
| $\Delta V_O$ | Line Regulation | $V_I$ = 10.5 to 25 V $I_O$ = 200 mA | | | 100 | mV |
| | | $V_I$ = 11 to 25 V $I_O$ = 200 mA | | | 50 | |
| $\Delta V_O$ | Load Regulation | $I_O$ = 5 to 500 mA $T_J$ = 25°C | | | 160 | mV |
| | | $I_O$ = 5 to 200 mA $T_J$ = 25°C | | | 80 | |
| $I_d$ | Quiescent Current | | | | 6 | mA |
| $\Delta I_d$ | Quiescent Current Change | $I_O$ = 5 to 350 mA | | | 0.5 | mA |
| | | $I_O$ = 200 mA $V_I$ = 10.5 to 25 V | | | 0.8 | |
| $\Delta V_O/\Delta T$ | Output Voltage Drift | $I_O$ = 5 mA $T_J$ = 0 to 125°C | | -0.5 | | mV/°C |
| SVR | Supply Voltage Rejection | $V_I$ = 11.5 to 21.5 V f = 120Hz<br>$I_O$ = 300mA | 56 | | | dB |
| eN | Output Noise Voltage | B =10Hz to 100KHz | | 52 | | µV |
| $V_d$ | Dropout Voltage | | | 2 | | V |
| $I_{sc}$ | Short Circuit Current | $V_I$ = 35 V | | 250 | | mA |

**ELECTRICAL CHARACTERISTICS OF L78M09C** (refer to the test circuits, $T_J$ = 25°C, $V_I$ = 15V, $I_O$ = 350 mA, $C_I$ = 0.33 µF, $C_O$ = 0.1 µF unless otherwise specified).

| Symbol | Parameter | Test Conditions | Min. | Typ. | Max. | Unit |
|---|---|---|---|---|---|---|
| $V_O$ | Output Voltage | | 8.65 | 9 | 9.35 | V |
| $V_O$ | Output Voltage | $I_O$ = 5 to 350 mA $V_I$ = 11.5 to 24 V | 8.55 | 9 | 9.45 | V |
| $\Delta V_O$ | Line Regulation | $V_I$ = 11.5 to 25 V $I_O$ = 200 mA | | | 100 | mV |
| | | $V_I$ = 12 to 25 V $I_O$ = 200 mA | | | 50 | |
| $\Delta V_O$ | Load Regulation | $I_O$ = 5 to 500 mA $T_J$ = 25°C | | | 180 | mV |
| | | $I_O$ = 5 to 200 mA $T_J$ = 25°C | | | 90 | |
| $I_d$ | Quiescent Current | | | | 6 | mA |
| $\Delta I_d$ | Quiescent Current Change | $I_O$ = 5 to 350 mA | | | 0.5 | mA |
| | | $I_O$ = 200 mA $V_I$ = 11.5 to 25 V | | | 0.8 | |
| $\Delta V_O/\Delta T$ | Output Voltage Drift | $I_O$ = 5 mA $T_J$ = 0 to 125°C | | -0.5 | | mV/°C |
| SVR | Supply Voltage Rejection | $V_I$ = 12.5 to 23 V f = 120Hz<br>$I_O$ = 300mA | 56 | | | dB |
| eN | Output Noise Voltage | B =10Hz to 100KHz | | 58 | | µV |
| $V_d$ | Dropout Voltage | | | 2 | | V |
| $I_{sc}$ | Short Circuit Current | $V_I$ = 35 V | | 250 | | mA |

**ELECTRICAL CHARACTERISTICS OF L78M10C** (refer to the test circuits, $T_J$ = 25°C, $V_I$ = 16V, $I_O$ = 350 mA, $C_I$ = 0.33 µF, $C_O$ = 0.1 µF unless otherwise specified).

| Symbol | Parameter | Test Conditions | | Min. | Typ. | Max. | Unit |
|---|---|---|---|---|---|---|---|
| $V_O$ | Output Voltage | | | 9.6 | 10 | 10.4 | V |
| $V_O$ | Output Voltage | $I_O$ = 5 to 350 mA | $V_I$ = 12.5 to 25 V | 9.5 | 10 | 10.5 | V |
| $\Delta V_O$ | Line Regulation | $V_I$ = 12.5 to 30 V | $I_O$ = 200 mA | | | 100 | mV |
| | | $V_I$ = 13 to 30 V | $I_O$ = 200 mA | | | 50 | |
| $\Delta V_O$ | Load Regulation | $I_O$ = 5 to 500 mA | $T_J$ = 25°C | | | 200 | mV |
| | | $I_O$ = 5 to 200 mA | $T_J$ = 25°C | | | 100 | |
| $I_d$ | Quiescent Current | | | | | 6 | mA |
| $\Delta I_d$ | Quiescent Current Change | $I_O$ = 5 to 350 mA | | | | 0.5 | mA |
| | | $I_O$ = 200 mA | $V_I$ = 12.5 to 30 V | | | 0.8 | |
| $\Delta V_O/\Delta T$ | Output Voltage Drift | $I_O$ = 5 mA | $T_J$ = 0 to 125°C | | -0.5 | | mV/°C |
| SVR | Supply Voltage Rejection | $V_I$ = 13.5 to 24 V<br>$I_O$ = 300mA | f = 120Hz | 56 | | | dB |
| eN | Output Noise Voltage | B =10Hz to 100KHz | | | 64 | | µV |
| $V_d$ | Dropout Voltage | | | | 2 | | V |
| $I_{sc}$ | Short Circuit Current | $V_I$ = 35 V | | | 245 | | mA |

**ELECTRICAL CHARACTERISTICS OF L78M12C** (refer to the test circuits, $T_J$ = 25°C, $V_I$ = 19V, $I_O$ = 350 mA, $C_I$ = 0.33 µF, $C_O$ = 0.1 µF unless otherwise specified).

| Symbol | Parameter | Test Conditions | | Min. | Typ. | Max. | Unit |
|---|---|---|---|---|---|---|---|
| $V_O$ | Output Voltage | | | 11.5 | 12 | 12.5 | V |
| $V_O$ | Output Voltage | $I_O$ = 5 to 350 mA | $V_I$ = 14.5 to 27 V | 11.4 | 12 | 12.6 | V |
| $\Delta V_O$ | Line Regulation | $V_I$ = 14.5 to 30 V | $I_O$ = 200 mA | | | 100 | mV |
| | | $V_I$ = 16 to 30 V | $I_O$ = 200 mA | | | 50 | |
| $\Delta V_O$ | Load Regulation | $I_O$ = 5 to 500 mA | $T_J$ = 25°C | | | 240 | mV |
| | | $I_O$ = 5 to 200 mA | $T_J$ = 25°C | | | 120 | |
| $I_d$ | Quiescent Current | | | | | 6 | mA |
| $\Delta I_d$ | Quiescent Current Change | $I_O$ = 5 to 350 mA | | | | 0.5 | mA |
| | | $I_O$ = 200 mA | $V_I$ = 14.5 to 30 V | | | 0.8 | |
| $\Delta V_O/\Delta T$ | Output Voltage Drift | $I_O$ = 5 mA | $T_J$ = 0 to 125°C | | -1 | | mV/°C |
| SVR | Supply Voltage Rejection | $V_I$ = 15 to 25 V<br>$I_O$ = 300mA | f = 120Hz | 55 | | | dB |
| eN | Output Noise Voltage | B =10Hz to 100KHz | | | 75 | | µV |
| $V_d$ | Dropout Voltage | | | | 2 | | V |
| $I_{sc}$ | Short Circuit Current | $V_I$ = 35 V | | | 240 | | mA |

**ELECTRICAL CHARACTERISTICS OF L78M15C** (refer to the test circuits, $T_J$ = 25°C, $V_I$ = 23V, $I_O$ = 350 mA, $C_I$ = 0.33 µF, $C_O$ = 0.1 µF unless otherwise specified).

| Symbol | Parameter | Test Conditions | | Min. | Typ. | Max. | Unit |
|---|---|---|---|---|---|---|---|
| $V_O$ | Output Voltage | | | 14.4 | 15 | 15.6 | V |
| $V_O$ | Output Voltage | $I_O$ = 5 to 350 mA | $V_I$ = 17.5 to 30 V | 14.25 | 15 | 15.75 | V |
| $\Delta V_O$ | Line Regulation | $V_I$ = 17.5 to 30 V | $I_O$ = 200 mA | | | 100 | mV |
| | | $V_I$ = 20 to 30 V | $I_O$ = 200 mA | | | 50 | |
| $\Delta V_O$ | Load Regulation | $I_O$ = 5 to 500 mA | $T_J$ = 25°C | | | 300 | mV |
| | | $I_O$ = 5 to 200 mA | $T_J$ = 25°C | | | 150 | |
| $I_d$ | Quiescent Current | | | | | 6 | mA |
| $\Delta I_d$ | Quiescent Current Change | $I_O$ = 5 to 350 mA | | | | 0.5 | mA |
| | | $I_O$ = 200 mA | $V_I$ = 17.5 to 30 V | | | 0.8 | |
| $\Delta V_O/\Delta T$ | Output Voltage Drift | $I_O$ = 5 mA | $T_J$ = 0 to 125°C | | -1 | | mV/°C |
| SVR | Supply Voltage Rejection | $V_I$ = 18.5 to 28.5 V<br>$I_O$ = 300mA | f = 120Hz | 54 | | | dB |
| eN | Output Noise Voltage | B =10Hz to 100KHz | | | 90 | | µV |
| $V_d$ | Dropout Voltage | | | | 2 | | V |
| $I_{sc}$ | Short Circuit Current | $V_I$ = 35 V | | | 240 | | mA |

**ELECTRICAL CHARACTERISTICS OF L78M18C** (refer to the test circuits, $T_J$ = 25°C, $V_I$ = 26V, $I_O$ = 350 mA, $C_I$ = 0.33 µF, $C_O$ = 0.1 µF unless otherwise specified).

| Symbol | Parameter | Test Conditions | | Min. | Typ. | Max. | Unit |
|---|---|---|---|---|---|---|---|
| $V_O$ | Output Voltage | | | 17.3 | 18 | 18.7 | V |
| $V_O$ | Output Voltage | $I_O$ = 5 to 350 mA | $V_I$ = 20.5 to 33 V | 17.1 | 18 | 18.9 | V |
| $\Delta V_O$ | Line Regulation | $V_I$ = 21 to 33 V | $I_O$ = 200 mA | | | 100 | mV |
| | | $V_I$ = 24 to 33 V | $I_O$ = 200 mA | | | 50 | |
| $\Delta V_O$ | Load Regulation | $I_O$ = 5 to 500 mA | $T_J$ = 25°C | | | 360 | mV |
| | | $I_O$ = 5 to 200 mA | $T_J$ = 25°C | | | 180 | |
| $I_d$ | Quiescent Current | | | | | 6 | mA |
| $\Delta I_d$ | Quiescent Current Change | $I_O$ = 5 to 350 mA | | | | 0.5 | mA |
| | | $I_O$ = 200 mA | $V_I$ = 21 to 33 V | | | 0.8 | |
| $\Delta V_O/\Delta T$ | Output Voltage Drift | $I_O$ = 5 mA | $T_J$ = 0 to 125°C | | -1.1 | | mV/°C |
| SVR | Supply Voltage Rejection | $V_I$ = 22 to 32 V<br>$I_O$ = 300mA | f = 120Hz | 53 | | | dB |
| eN | Output Noise Voltage | B =10Hz to 100KHz | | | 100 | | µV |
| $V_d$ | Dropout Voltage | | | | 2 | | V |
| $I_{sc}$ | Short Circuit Current | $V_I$ = 35 V | | | 240 | | mA |

**ELECTRICAL CHARACTERISTICS OF L78M20C** (refer to the test circuits, $T_J$ = 25°C, $V_I$ = 29V, $I_O$ = 350 mA, $C_I$ = 0.33 µF, $C_O$ = 0.1 µF unless otherwise specified).

| Symbol | Parameter | Test Conditions | | Min. | Typ. | Max. | Unit |
|---|---|---|---|---|---|---|---|
| $V_O$ | Output Voltage | | | 19.2 | 20 | 20.8 | V |
| $V_O$ | Output Voltage | $I_O$ = 5 to 350 mA | $V_I$ = 23 to 35 V | 19 | 20 | 21 | V |
| $\Delta V_O$ | Line Regulation | $V_I$ = 23 to 35 V | $I_O$ = 200 mA | | | 100 | mV |
| | | $V_I$ = 24 to 35 V | $I_O$ = 200 mA | | | 50 | |
| $\Delta V_O$ | Load Regulation | $I_O$ = 5 to 500 mA | $T_J$ = 25°C | | | 400 | mV |
| | | $I_O$ = 5 to 200 mA | $T_J$ = 25°C | | | 200 | |
| $I_d$ | Quiescent Current | | | | | 6 | mA |
| $\Delta I_d$ | Quiescent Current Change | $I_O$ = 5 to 350 mA | | | | 0.5 | mA |
| | | $I_O$ = 200 mA | $V_I$ = 23 to 35 V | | | 0.8 | |
| $\Delta V_O/\Delta T$ | Output Voltage Drift | $I_O$ = 5 mA | $T_J$ = 0 to 125°C | | -1.1 | | mV/°C |
| SVR | Supply Voltage Rejection | $V_I$ = 24 to 34 V<br>$I_O$ = 300mA | f = 120Hz | 53 | | | dB |
| eN | Output Noise Voltage | B =10Hz to 100KHz | | | 110 | | µV |
| $V_d$ | Dropout Voltage | | | | 2 | | V |
| $I_{sc}$ | Short Circuit Current | $V_I$ = 35 V | | | 240 | | mA |

**ELECTRICAL CHARACTERISTICS OF L78M24C** (refer to the test circuits, $T_J$ = 25°C, $V_I$ = 33V, $I_O$ = 350 mA, $C_I$ = 0.33 µF, $C_O$ = 0.1 µF unless otherwise specified),

| Symbol | Parameter | Test Conditions | | Min. | Typ. | Max. | Unit |
|---|---|---|---|---|---|---|---|
| $V_O$ | Output Voltage | | | 23 | 24 | 25 | V |
| $V_O$ | Output Voltage | $I_O$ = 5 to 350 mA | $V_I$ = 27 to 38 V | 22.8 | 24 | 25.2 | V |
| $\Delta V_O$ | Line Regulation | $V_I$ = 27 to 38 V | $I_O$ = 200 mA | | | 100 | mV |
| | | $V_I$ = 28 to 38 V | $I_O$ = 200 mA | | | 50 | |
| $\Delta V_O$ | Load Regulation | $I_O$ = 5 to 500 mA | $T_J$ = 25°C | | | 480 | mV |
| | | $I_O$ = 5 to 200 mA | $T_J$ = 25°C | | | 240 | |
| $I_d$ | Quiescent Current | | | | | 6 | mA |
| $\Delta I_d$ | Quiescent Current Change | $I_O$ = 5 to 350 mA | | | | 0.5 | mA |
| | | $I_O$ = 200 mA | $V_I$ = 27 to 38 V | | | 0.8 | |
| $\Delta V_O/\Delta T$ | Output Voltage Drift | $I_O$ = 5 mA | $T_J$ = 0 to 125°C | | -1.2 | | mV/°C |
| SVR | Supply Voltage Rejection | $V_I$ = 28 to 38 V<br>$I_O$ = 300mA | f = 120Hz | 50 | | | dB |
| eN | Output Noise Voltage | B =10Hz to 100KHz | | | 170 | | µV |
| $V_d$ | Dropout Voltage | | | | 2 | | V |
| $I_{sc}$ | Short Circuit Current | $V_I$ = 35 V | | | 240 | | mA |

**Figure 4 :** Dropout Voltage vs Junction Temperature

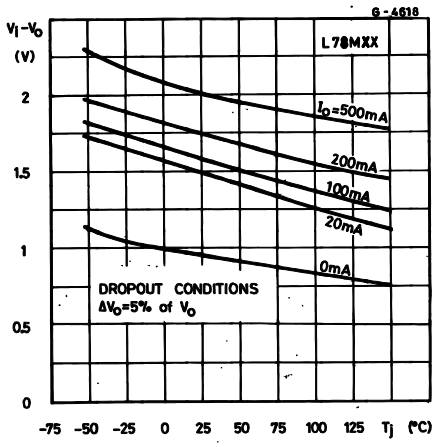


**Figure 5 :** Dropout Characteristics

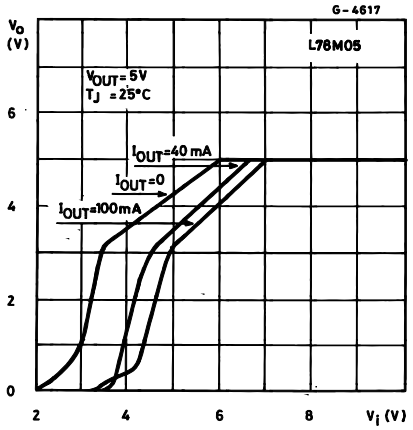


**Figure 6 :** Peak Output Current vs Input-Output Differential Voltage

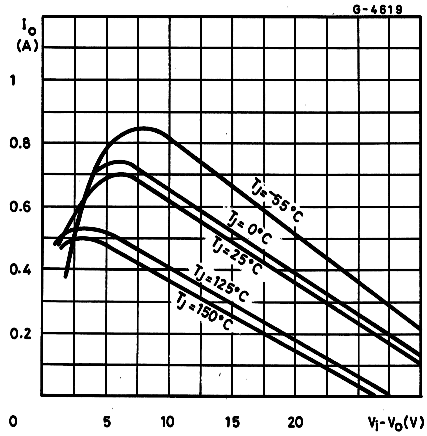


**Figure 7 :** Output Voltage vs Junction Temperature

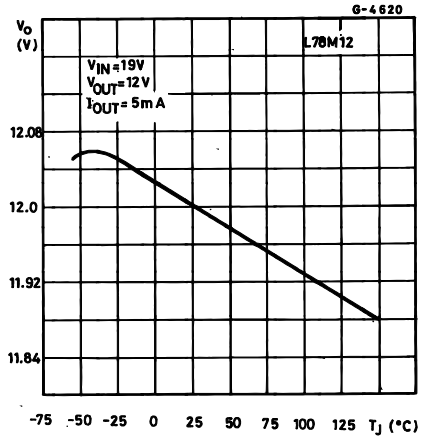


**Figure 8 :** Supply Voltage Rejection vs Frequency

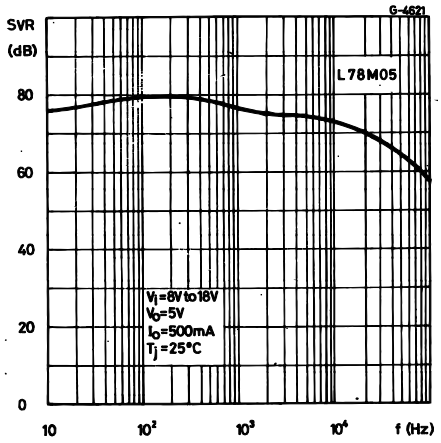


**Figure 9 :** Quiescent Current vs Junction Temperature

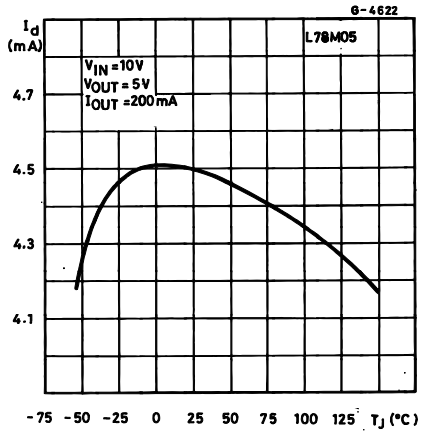

**Figure 10 :** Load Transient Response

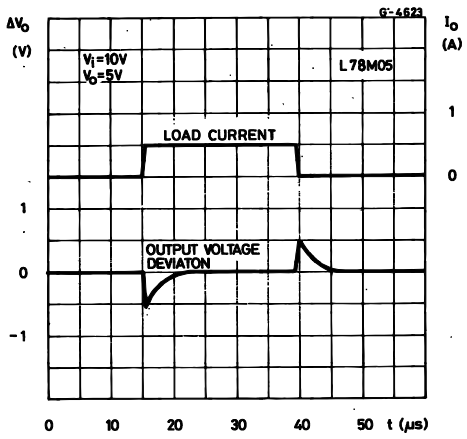


**Figure 11 :** Line Transient Response

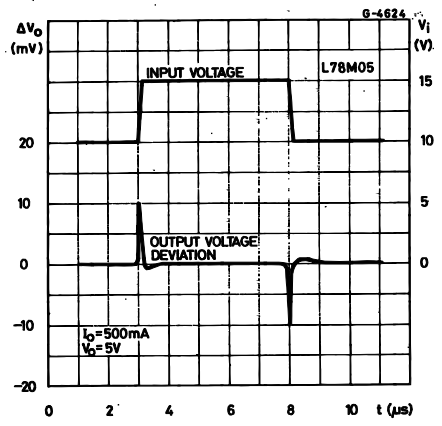


**Figure 12 :** Quiescent Current vs Input Voltage

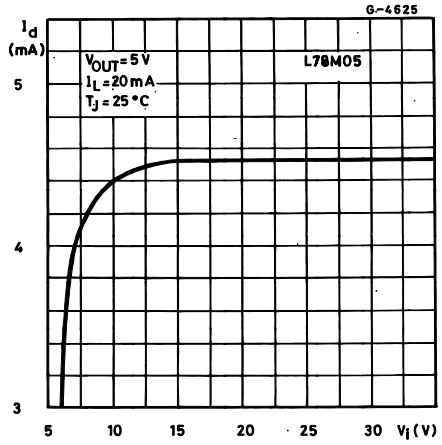

**Figure 13 :** Fixed Output Regulator

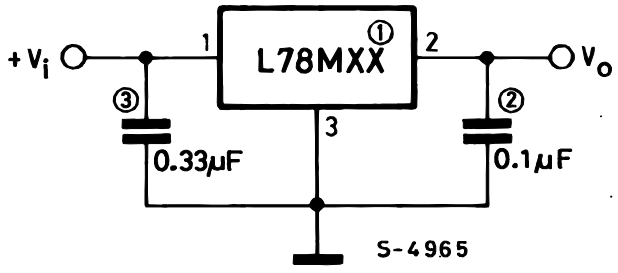


NOTE:
1. To specify an output voltage, substitute voltage value for "XX".
2. Although no output capacitor is need for stability, it does improve transient response.
3. Required if regulator is locate an appreciable distance from power supply filter.

**Figure 14 :**

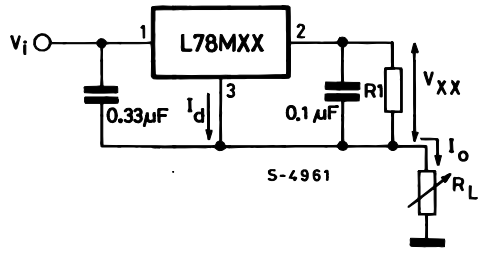


$$I_O = \frac{V_{XX}}{R_1} + I_d$$

**Figure 15 :**

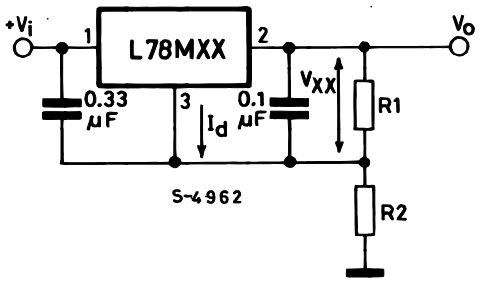


$I_{R1} \geq 5\ Id$

$$V_O = V_{XX}\left(1 + \frac{R_2}{R_1}\right) + I_d R_2$$

**Figure 16 :** Adjustable Output Regulator (7 to 30V)

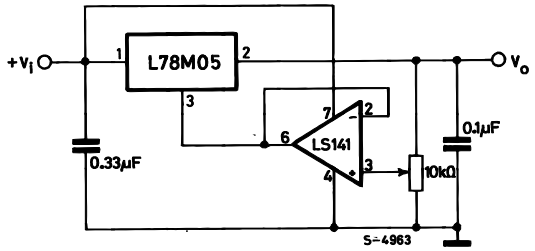


**Figure 17 :** 0.5 to 10V Regulator

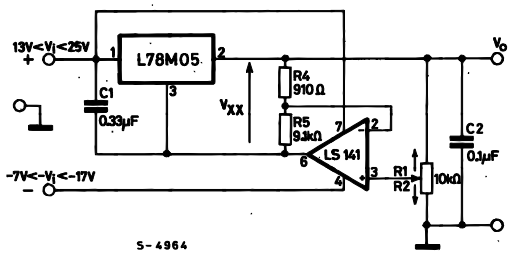


$$V_O = V_{xx} \frac{R_4}{R_1}$$

**Figure 18 :** High Current Voltage Regulator

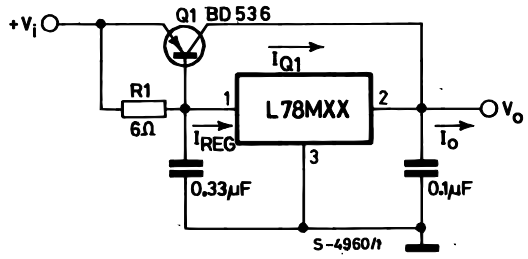


$$R_1 = \frac{V_{BEQ1}}{I_{REQ} - \frac{I_{Q1}}{\beta_{Q1}}}$$

$$I_O = I_{REG} + Q_1 \left(I_{REG} \frac{V_{BEQ1}}{R_1}\right)$$

**Figure 19 :** High Output Current with Short Circuit

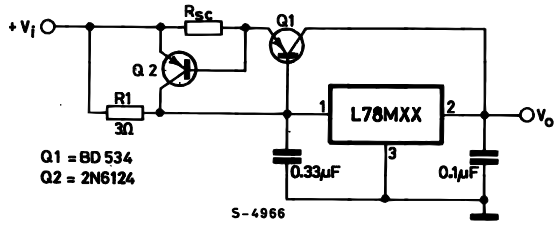


$$V_O = \frac{V_{BEQ2}}{I_{SC}}$$

**Figure 20 :** Tracking Voltage Regulator

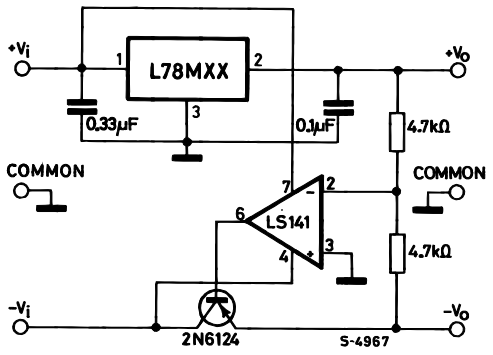


**Figure 21 :** High Input Voltage Circuit

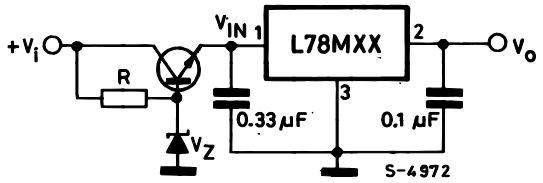


$V_{IN} = V_I - (V_Z + V_{BE})$

**Figure 22 :** Reducing Power Dissipation with Dropping Resistor

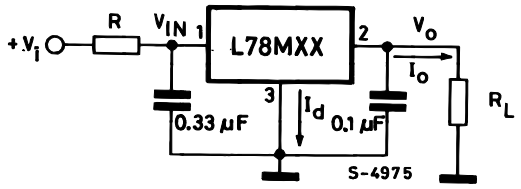


$$R = \frac{V_{I(min)} - V_{XX} - V_{DROP(max)}}{I_{O(max)} + I_{d(max)}}$$

**Figure 23 :** Power AM Modulator (unity voltage gain, $I_O \leq 0.5$)

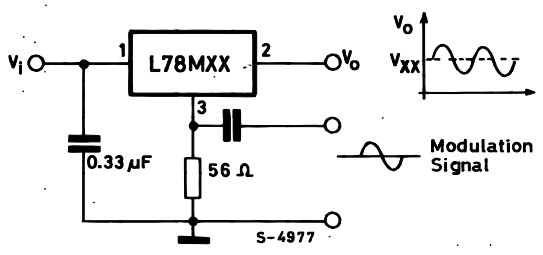


NOTE: The circuit performs well up to 100 KHz.

**Figure 24 :** Adjustable Output Voltage with Temperature Compensation

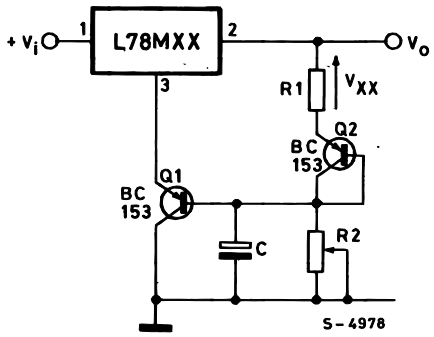


$$V_O = V_{XX}\left(1+\frac{R_2}{R_1}\right) + V_{BE}$$

NOTE: $Q_2$ is connected as a diode in order to compensate the variation of the $Q_1$ $V_{BE}$ with the temperature. C allows a slow risetime of the $V_O$.

## TO-220 MECHANICAL DATA

| DIM. | mm. | | | inch | | |
|---|---|---|---|---|---|---|
| | MIN. | TYP | MAX. | MIN. | TYP. | MAX. |
| A | 4.40 | | 4.60 | 0.173 | | 0.181 |
| C | 1.23 | | 1.32 | 0.048 | | 0.051 |
| D | 2.40 | | 2.72 | 0.094 | | 0.107 |
| D1 | | 1.27 | | | 0.050 | |
| E | 0.49 | | 0.70 | 0.019 | | 0.027 |
| F | 0.61 | | 0.88 | 0.024 | | 0.034 |
| F1 | 1.14 | | 1.70 | 0.044 | | 0.067 |
| F2 | 1.14 | | 1.70 | 0.044 | | 0.067 |
| G | 4.95 | | 5.15 | 0.194 | | 0.203 |
| G1 | 2.4 | | 2.7 | 0.094 | | 0.106 |
| H2 | 10.0 | | 10.40 | 0.393 | | 0.409 |
| L2 | | 16.4 | | | 0.645 | |
| L4 | 13.0 | | 14.0 | 0.511 | | 0.551 |
| L5 | 2.65 | | 2.95 | 0.104 | | 0.116 |
| L6 | 15.25 | | 15.75 | 0.600 | | 0.620 |
| L7 | 6.2 | | 6.6 | 0.244 | | 0.260 |
| L9 | 3.5 | | 3.93 | 0.137 | | 0.154 |
| DIA. | 3.75 | | 3.85 | 0.147 | | 0.151 |

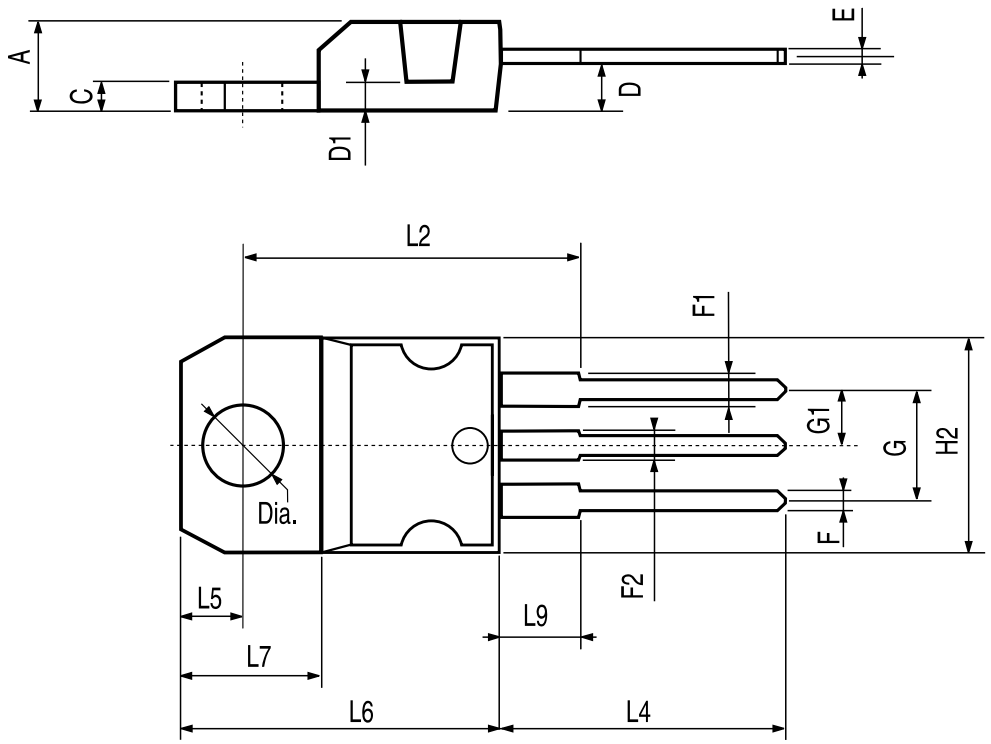


P011C

## TO-220FP MECHANICAL DATA

| DIM. | mm. | | | inch | | |
|---|---|---|---|---|---|---|
| | MIN. | TYP | MAX. | MIN. | TYP. | MAX. |
| A | 4.40 | | 4.60 | 0.173 | | 0.181 |
| B | 2.5 | | 2.7 | 0.098 | | 0.106 |
| D | 2.5 | | 2.75 | 0.098 | | 0.108 |
| E | 0.45 | | 0.70 | 0.017 | | 0.027 |
| F | 0.75 | | 1 | 0.030 | | 0.039 |
| F1 | 1.15 | | 1.50 | 0.045 | | 0.059 |
| F2 | 1.15 | | 1.50 | 0.045 | | 0.059 |
| G | 4.95 | | 5.2 | 0.194 | | 0.204 |
| G1 | 2.4 | | 2.7 | 0.094 | | 0.106 |
| H | 10.0 | | 10.40 | 0.393 | | 0.409 |
| L2 | | 16 | | | 0.630 | |
| L3 | 28.6 | | 30.6 | 1.126 | | 1.204 |
| L4 | 9.8 | | 10.6 | 0.385 | | 0.417 |
| L6 | 15.9 | | 16.4 | 0.626 | | 0.645 |
| L7 | 9 | | 9.3 | 0.354 | | 0.366 |
| DIA. | 3 | | 3.2 | 0.118 | | 0.126 |

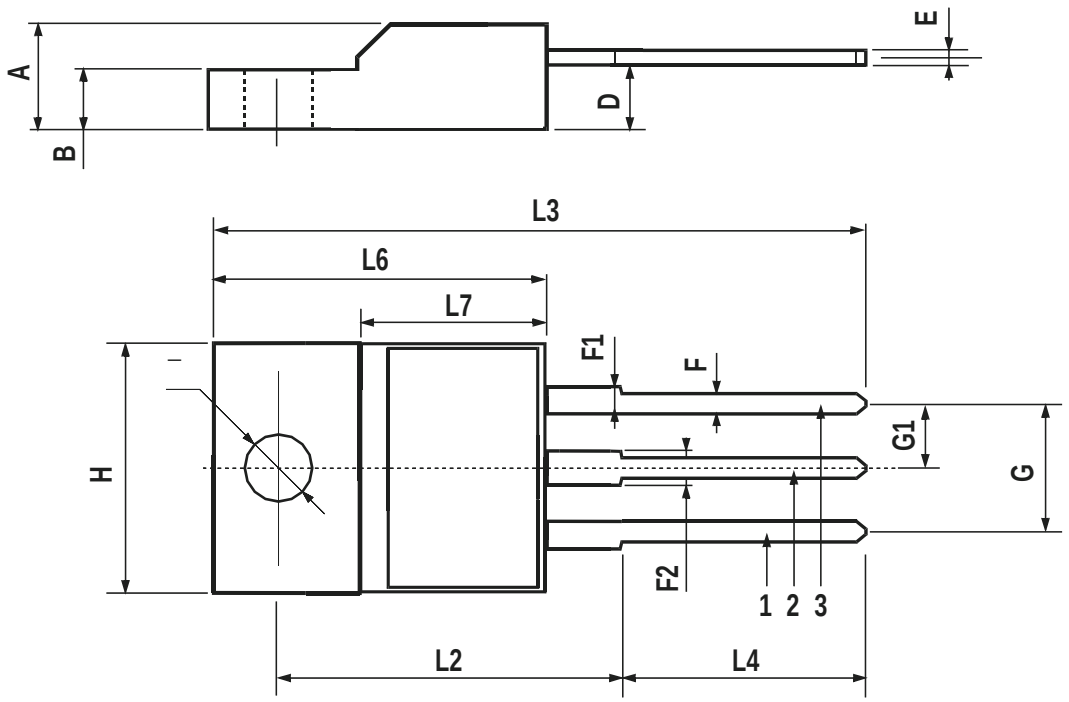


7012510/G

## DPAK MECHANICAL DATA

| DIM. | mm. | | | inch | | |
|---|---|---|---|---|---|---|
| | MIN. | TYP | MAX. | MIN. | TYP. | MAX. |
| A | 2.2 | | 2.4 | 0.086 | | 0.094 |
| A1 | 0.9 | | 1.1 | 0.035 | | 0.043 |
| A2 | 0.03 | | 0.23 | 0.001 | | 0.009 |
| B | 0.64 | | 0.9 | 0.025 | | 0.035 |
| B2 | 5.2 | | 5.4 | 0.204 | | 0.212 |
| C | 0.45 | | 0.6 | 0.017 | | 0.023 |
| C2 | 0.48 | | 0.6 | 0.019 | | 0.023 |
| D | 6 | | 6.2 | 0.236 | | 0.244 |
| D1 | | 5.1 | | | 0.200 | |
| E | 6.4 | | 6.6 | 0.252 | | 0.260 |
| E1 | | 4.7 | | | 0.185 | |
| e | | 2.28 | | | 0.090 | |
| e1 | 4.4 | | 4.6 | 0.173 | | 0.181 |
| H | 9.35 | | 10.1 | 0.368 | | 0.397 |
| L | | 1 | | | 0.039 | |
| (L1) | | 2.8 | | | 0.110 | |
| L2 | | 0.8 | | | 0.031 | |
| L4 | 0.6 | | 1 | 0.023 | | 0.039 |

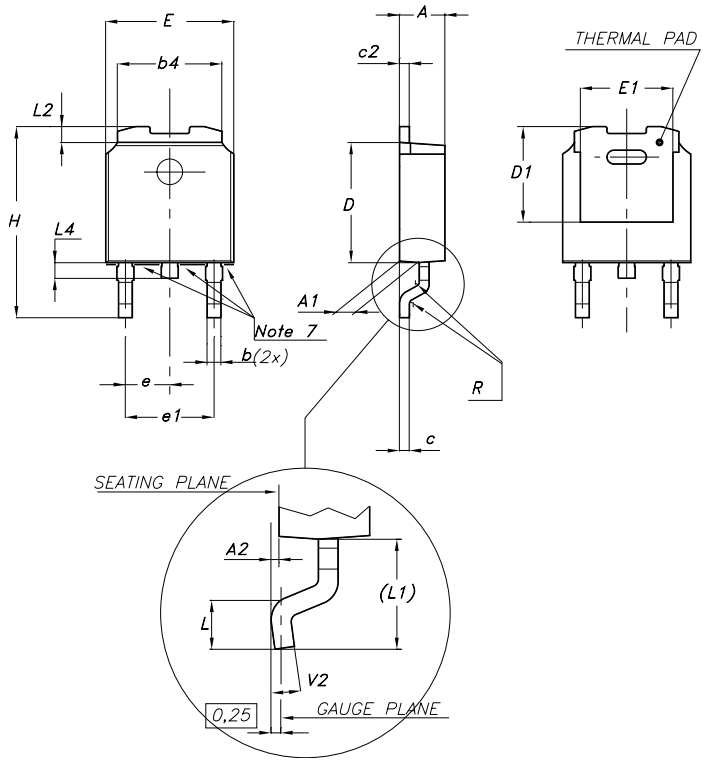


0068772-F

## IPAK MECHANICAL DATA

| DIM. | mm. | | | inch | | |
|---|---|---|---|---|---|---|
| | MIN. | TYP | MAX. | MIN. | TYP. | MAX. |
| A | 2.2 | | 2.4 | 0.086 | | 0.094 |
| A1 | 0.9 | | 1.1 | 0.035 | | 0.043 |
| B | 0.64 | | 0.9 | 0.025 | | 0.035 |
| B2 | 5.2 | | 5.4 | 0.204 | | 0.212 |
| B3 | | | 0.95 | | | 0.037 |
| B5 | | 0.3 | | | 0.012 | |
| B6 | | | 0.95 | | | 0.037 |
| C | 0.45 | | 0.6 | 0.017 | | 0.023 |
| C2 | 0.48 | | 0.6 | 0.019 | | 0.023 |
| D | 6 | | 6.2 | 0.236 | | 0.244 |
| E | 6.4 | | 6.6 | 0.252 | | 0.260 |
| G | 4.4 | | 4.6 | 0.173 | | 0.181 |
| H | 15.9 | | 16.3 | 0.626 | | 0.641 |
| L | 9 | | 9.4 | 0.354 | | 0.370 |
| L1 | 0.8 | | 1.2 | 0.031 | | 0.047 |
| L2 | | 0.8 | 1 | | 0.031 | 0.039 |

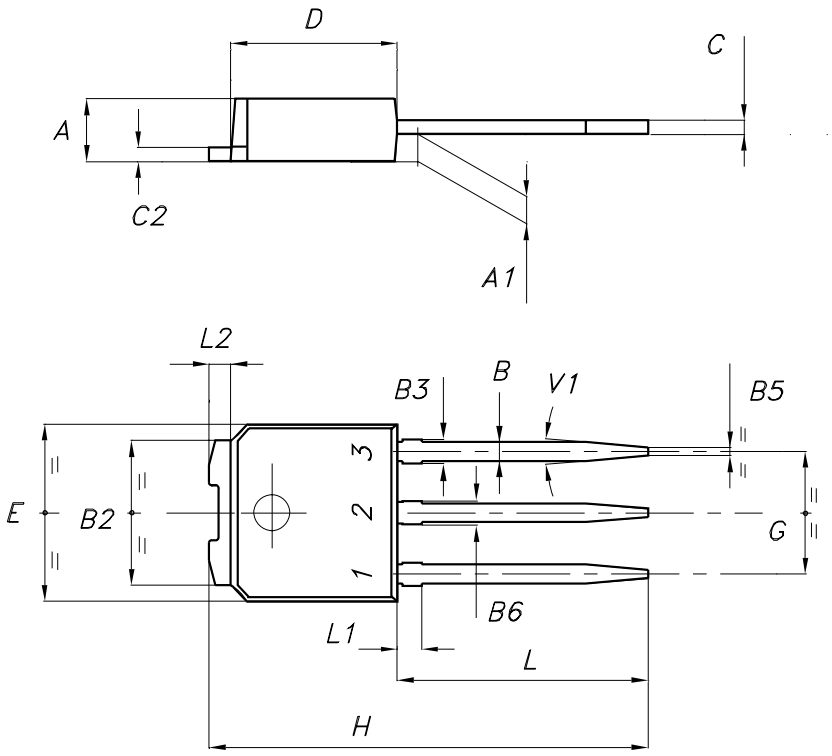


0068771-F

## Tape & Reel DPAK-PPAK MECHANICAL DATA

| DIM. | mm. | | | inch | | |
|---|---|---|---|---|---|---|
| | MIN. | TYP | MAX. | MIN. | TYP. | MAX. |
| A | | | 330 | | | 12.992 |
| C | 12.8 | 13.0 | 13.2 | 0.504 | 0.512 | 0.519 |
| D | 20.2 | | | 0.795 | | |
| N | 60 | | | 2.362 | | |
| T | | | 22.4 | | | 0.882 |
| Ao | 6.80 | 6.90 | 7.00 | 0.268 | 0.272 | 0.2.76 |
| Bo | 10.40 | 10.50 | 10.60 | 0.409 | 0.413 | 0.417 |
| Ko | 2.55 | 2.65 | 2.75 | 0.100 | 0.104 | 0.105 |
| Po | 3.9 | 4.0 | 4.1 | 0.153 | 0.157 | 0.161 |
| P | 7.9 | 8.0 | 8.1 | 0.311 | 0.315 | 0.319 |

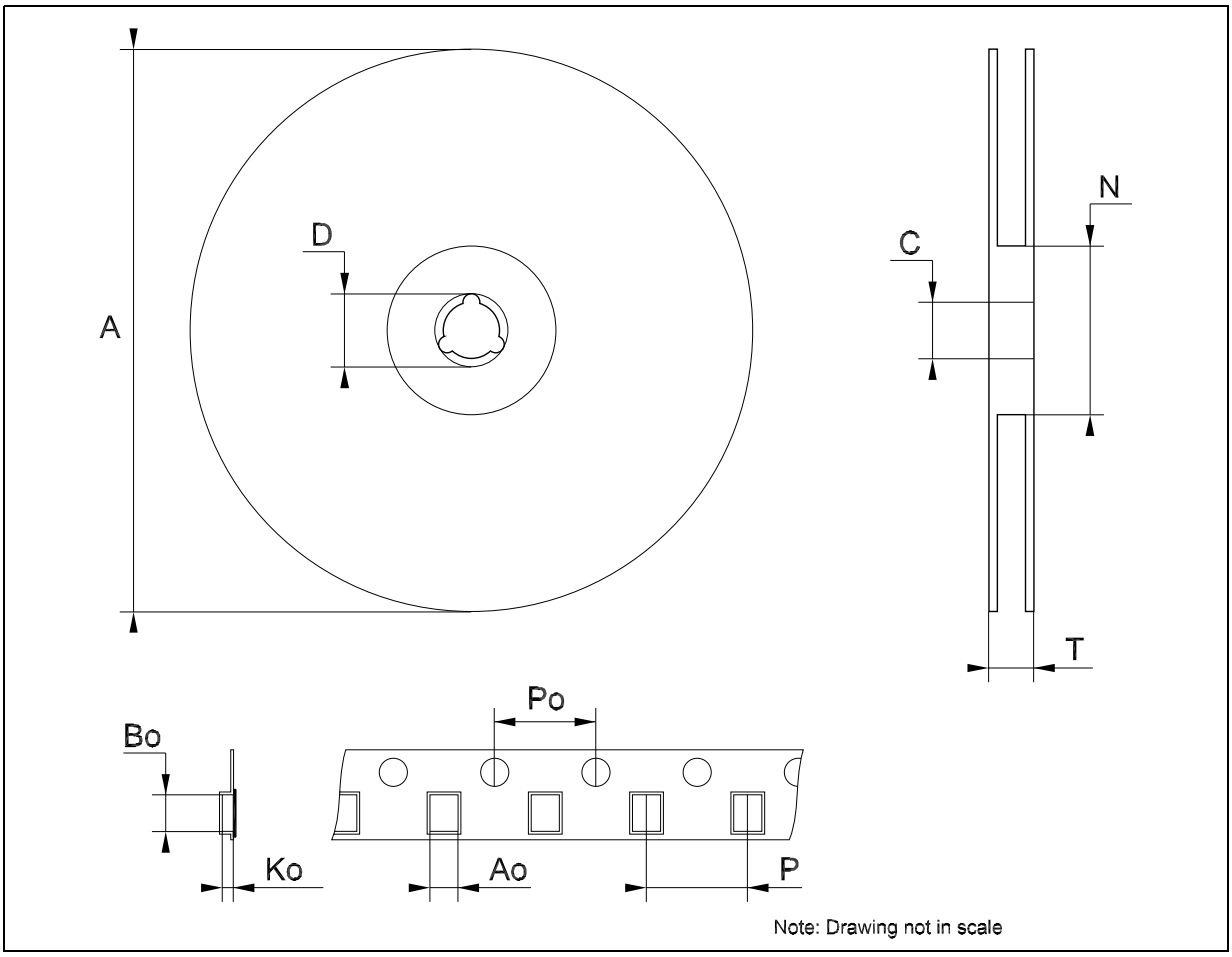

**Information furnished is believed to be accurate and reliable. However, STMicroelectronics assumes no responsibility for the consequences of use of such information nor for any infringement of patents or other rights of third parties which may result from its use. No license is granted by implication or otherwise under any patent or patent rights of STMicroelectronics. Specifications mentioned in this publication are subject to change without notice. This publication supersedes and replaces all information previously supplied. STMicroelectronics products are not authorized for use as critical components in life support devices or systems without express written approval of STMicroelectronics.**

**The ST logo is a registered trademark of STMicroelectronics**

**All other names are the property of their respective owners**

**© 2004 STMicroelectronics - All Rights Reserved**

**STMicroelectronics GROUP OF COMPANIES**

Australia - Belgium - Brazil - Canada - China - Czech Republic - Finland - France - Germany - Hong Kong - India - Israel - Italy - Japan - Malaysia - Malta - Morocco - Singapore - Spain - Sweden - Switzerland - United Kingdom - United States.

**http://www.st.com**